Smarter. Greener. Together.


## Industrial Automation Headquarters

**Delta Electronics, Inc.**
Taoyuan Technology Center
No.18, Xinglong Rd., Taoyuan City,
Taoyuan County 33068, Taiwan
TEL: 886-3-362-6301 / FAX: 886-3-371-6301

## Asia

**Delta Electronics (Jiangsu) Ltd.**
Wujiang Plant 3
1688 Jiangxing East Road,
Wujiang Economic Development Zone
Wujiang City, Jiang Su Province,
People's Republic of China (Post code: 215200)
TEL: 86-512-6340-3008 / FAX: 86-769-6340-7290

**Delta Greentech (China) Co., Ltd.**
238 Min-Xia Road, Pudong District,
ShangHai, P.R.C.
Post code : 201209
TEL: 86-21-58635678 / FAX: 86-21-58630003

**Delta Electronics (Japan), Inc.**
Tokyo Office
2-1-14 Minato-ku Shibadaimon,
Tokyo 105-0012, Japan
TEL: 81-3-5733-1111 / FAX: 81-3-5733-1211

**Delta Electronics (Korea), Inc.**
1511, Byucksan Digital Valley 6-cha, Gasan-dong,
Geumcheon-gu, Seoul, Korea, 153-704
TEL: 82-2-515-5303 / FAX: 82-2-515-5302

**Delta Electronics Int'l (S) Pte Ltd**
4 Kaki Bukit Ave 1, #05-05, Singapore 417939
TEL: 65-6747-5155 / FAX: 65-6744-9228

**Delta Electronics (India) Pvt. Ltd.**
Plot No 43 Sector 35, HSIIDC
Gurgaon, PIN 122001, Haryana, India
TEL : 91-124-4874900 / FAX : 91-124-4874945

## Americas

**Delta Products Corporation (USA)**
Raleigh Office
P.O. Box 12173,5101 Davis Drive,
Research Triangle Park, NC 27709, U.S.A.
TEL: 1-919-767-3800 / FAX: 1-919-767-8080

**Delta Greentech (Brasil) S.A**
Sao Paulo Office
Rua Itapeva, 26 - 3° andar Edificio Itapeva One-Bela Vista
01332-000-São Paulo-SP-Brazil
TEL: +55 11 3568-3855 / FAX: +55 11 3568-3865

## Europe

**Delta Electronics (Netherlands) B.V.**
Eindhoven Office
De Witbogt 20, 5652 AG Eindhoven, The Netherlands
TEL: 31-40-2592850 / FAX: 31-40-2592851


*We reserve the right to change the information in this catalogue without prior notice.


20151130
5011640611-11EE


Delta Sensorless Vector Control Compact Drive VFD-E Series User Manual

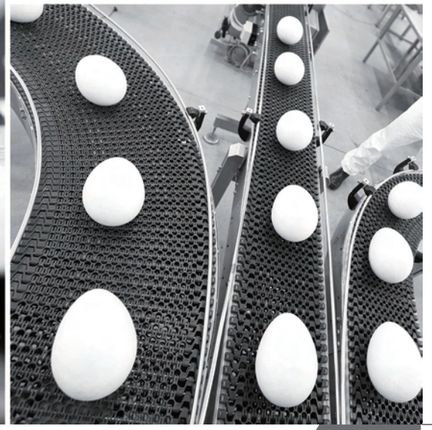

# Delta Sensorless Vector Control Compact Drive VFD-E Series User Manual

www.deltaww.com

Smarter. Greener. Together.


VFD-E Manual_20151130.indd 1
2015/11/30 下午 03:33:55

# Preface

Thank you for choosing DELTA's high-performance VFD-E Series. The VFD-E Series is manufactured with high-quality components and materials and incorporate the latest microprocessor technology available.

This manual is to be used for the installation, parameter setting, troubleshooting, and daily maintenance of the AC motor drive. To guarantee safe operation of the equipment, read the following safety guidelines before connecting power to the AC motor drive. Keep this operating manual at hand and distribute to all users for reference.

To ensure the safety of operators and equipment, only qualified personnel familiar with AC motor drive are to do installation, start-up and maintenance. Always read this manual thoroughly before using VFD-E series AC Motor Drive, especially the WARNING, DANGER and CAUTION notes. Failure to comply may result in personal injury and equipment damage. If you have any questions, please contact your dealer.

For Drive Board version 1.20 & Control Board version 2.20.

***PLEASE READ PRIOR TO INSTALLATION FOR SAFETY.***

**DANGER!**

1. AC input power must be disconnected before any wiring to the AC motor drive is made.
2. A charge may still remain in the DC-link capacitors with hazardous voltages, even if the power has been turned off. To prevent personal injury, please ensure that power has turned off before opening the AC motor drive and wait ten minutes for the capacitors to discharge to safe voltage levels.
3. Never reassemble internal components or wiring.
4. The AC motor drive may be destroyed beyond repair if incorrect cables are connected to the input/output terminals. Never connect the AC motor drive output terminals U/T1, V/T2, and W/T3 directly to the AC mains circuit power supply.
5. Ground the VFD-E using the ground terminal. The grounding method must comply with the laws of the country where the AC motor drive is to be installed. Refer to the Basic Wiring Diagram.
6. VFD-E series is used only to control variable speed of 3-phase induction motors, NOT for 1-phase motors or other purpose.
7. VFD-E series shall NOT be used for life support equipment or any life safety situation.

## WARNING!

1. DO NOT use Hi-pot test for internal components. The semi-conductor used in AC motor drive easily damage by high-voltage.
2. There are highly sensitive MOS components on the printed circuit boards. These components are especially sensitive to static electricity. To prevent damage to these components, do not touch these components or the circuit boards with metal objects or your bare hands.
3. Only qualified persons are allowed to install, wire and maintain AC motor drives.

## CAUTION!

1. Some parameters settings can cause the motor to run immediately after applying power.
2. DO NOT install the AC motor drive in a place subjected to high temperature, direct sunlight, high humidity, excessive vibration, corrosive gases or liquids, or airborne dust or metallic particles.
3. Only use AC motor drives within specification. Failure to comply may result in fire, explosion or electric shock.
4. To prevent personal injury, please keep children and unqualified people away from the equipment.
5. When the motor cable between AC motor drive and motor is too long, the layer insulation of the motor may be damaged. Please use a frequency inverter duty motor or add an AC output reactor to prevent damage to the motor. Refer to appendix B Reactor for details.
6. The rated voltage for AC motor drive must be ≤ 240V (≤ 480V for 460V models) and the short circuit must be ≤ 5000A RMS (≤10000A RMS for the ≥ 40hp (30kW) models).

DeviceNet is a registered trademark of the Open DeviceNet Vendor Association, Inc. Lonwork is a registered trademark of Echelon Corporation. Profibus is a registered trademark of Profibus International. CANopen is a registered trademark of CAN in Automation (CiA). Other trademarks belong to their respective owners.

**Chapter 1 Introduction**

1.1 Receiving and Inspection……1-2

1.2 Preparation for Installation and Wiring……...1-11

1.3 Dimensions……1-17

**Chapter 2 Installation and Wiring**

2.1 Wiring……2-3

2.2 External Wiring……2-13

2.3 Main Circuit……2-14

2.4 Control Terminals……2-19

**Chapter 3 Keypad and Start up**

3.1 Keypad……3-1

3.2 Operation Method……3-2

3.3 Trial Run……3-3

**Chapter 4 Parameters**

4.1 Summary of Parameter Settings……4-2

4.2 Parameter Settings for Applications……4-37

4.3 Description of Parameter Settings……4-42

4.4 Different Parameters for VFD*E*C Models……4-172

**Chapter 5 Troubleshooting**

5.1 Over Current (OC) ……5-1

5.2 Ground Fault……5-2

5.3 Over Voltage (OV) ……5-2

5.4 Low Voltage (Lv) ……5-3

5.5 Over Heat (OH) ……5-4
5.6 Overload……5-4
5.7 Keypad Display is Abnormal……5-5
5.8 Phase Loss (PHL) ……5-5
5.9 Motor cannot Run……5-6
5.10 Motor Speed cannot be Changed……5-7
5.11 Motor Stalls during Acceleration……5-8
5.12 The Motor does not Run as Expected……5-8
5.13 Electromagnetic/Induction Noise……5-9
5.14 Environmental Condition……5-9
5.15 Affecting Other Machines……5-10

**Chapter 6 Fault Code Information and Maintenance**

6.1 Fault Code Information……6-1
6.2 Maintenance and Inspections……6-7

**Appendix A Specifications**……A-1

**Appendix B Accessories**

B.1 All Brake Resistors & Brake Units Used in AC Motor Drives……B-1
B.2 No-fuse Circuit Breaker Chart……B-7
B.3 AC Reactor ……B-8
B.4 Remote Controller RC-01……B-12
B.5 PU06……B-13
B.6 KPE-LE02……B-16
B.7 Extension Card……B-20
B.8 Fieldbus Modules……B-30
B.9 DIN Rail……B-42

B.10 EMI Filter…….....B-44

B.11 Fan Kit……..…B-47

B.12 KPC-CC01 keypad…….....B-48

**Appendix C How to Select the Rights AC Motor Drive**

C.1 Capacity Formulas…….....C-2

C.2 General Precaution……...C-4

C.3 How to Choose a Suitable Motor……..…….C-5

**Appendix D How to Use PLC Function**

D.1 PLC Overview……...……...…D-1

D.2 Start-up…….....…D-2

D.3 Ladder Diagram…….D-7

D.4 PLC Devices…….....D-20

D.5 Commands…….....…D-32

D.6 Error Code……...…D-67

**Appendix E CANopen Function**

E.1 Overview……...…E-2

E.2 CANopen Communication Interface Description…….....…E-21

**Appendix F Suggestions and Error Corrections for Standard AC Motor Drives**

F.1 Maintenance and Inspections…….....…F-2

F.2 Greasy Dirt Problem……...…F-6

F.3 Fiber Dust Problem…….…F-7

F.4 Erosion Problem……..…….F-8

F.5 Industrial Dust Problem…….....…F-9

F.6 Wiring and Installation Problem…….…F-10

F.7 Multi-function Input/Output Terminals Problem……...…F-11

# Chapter 1 Introduction

**The AC motor drive should be kept in the shipping carton or crate before installation. In order to retain the warranty coverage, the AC motor drive should be stored properly when it is not to be used for an extended period of time. Storage conditions are:**

**CAUTION!**

1. Store in a clean and dry location free from direct sunlight or corrosive fumes.
2. Store within an ambient temperature range of -20 °C to +60 °C.
3. Store within a relative humidity range of 0% to 90% and non-condensing environment.
4. Store within an air pressure range of 86 kPA to 106kPA.
5. DO NOT place on the ground directly. It should be stored properly. Moreover, if the surrounding environment is humid, you should put exsiccator in the package.
6. DO NOT store in an area with rapid changes in temperature. It may cause condensation and frost.
7. If the AC motor drive is used but did not use more than three months, the temperature should not be higher than 30 °C. Storage longer than one year is not recommended, it could result in the degradation of the electrolytic capacitors.
8. When the AC motor drive is not used for longer time after installation on building sites or places with humidity and dust, it's best to move the AC motor drive to an environment as stated above.
9. If the electrolytic capacitors do not energize for a long time, its performance will decline. Therefore, the unused drive must be charged 3 ~4 hours every two years (*) to recover the performance of internal electrolytic capacitor of drive.

   *Note：It need to use the adjustable AC power source when the inverter power transmission (eg.: AC autotransformer) and pressurize to the rated voltage gradually, do not do the power transmission by using rated voltage directly.

## 1.1 Receiving and Inspection

**This VFD-E AC motor drive has gone through rigorous quality control tests at the factory before shipment. After receiving the AC motor drive, please check for the following:**

- Check to make sure that the package includes an AC motor drive, the User Manual/Quick Start and CD.
- Inspect the unit to assure it was not damaged during shipment.
- Make sure that the part number indicated on the nameplate corresponds with the part number of your order.

### 1.1.1 Nameplate Information

**Example for 1HP/0.75kW 3-phase 230V AC motor drive**

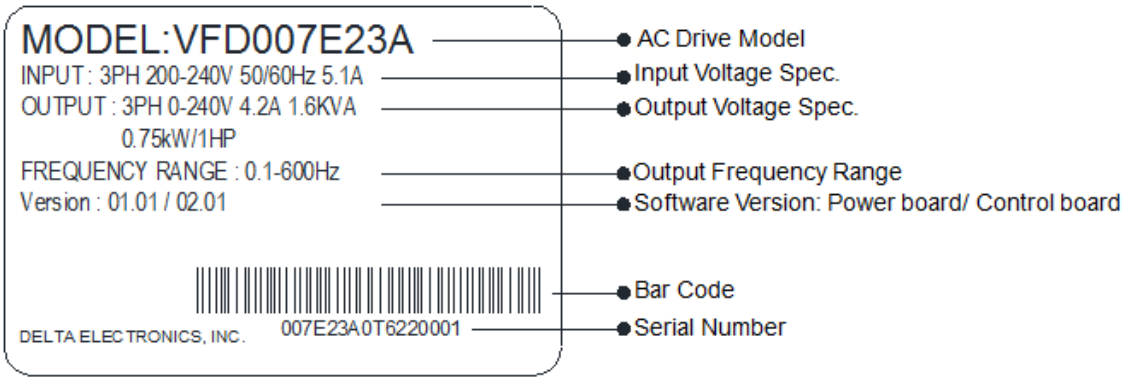


### 1.1.2 Model Explanation

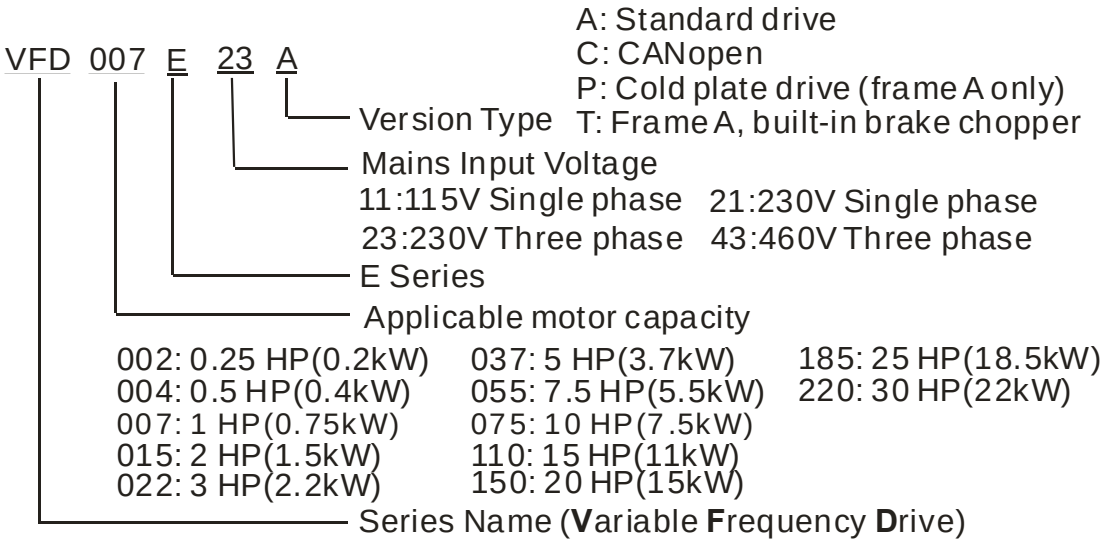

### 1.1.3 Series Number Explanation

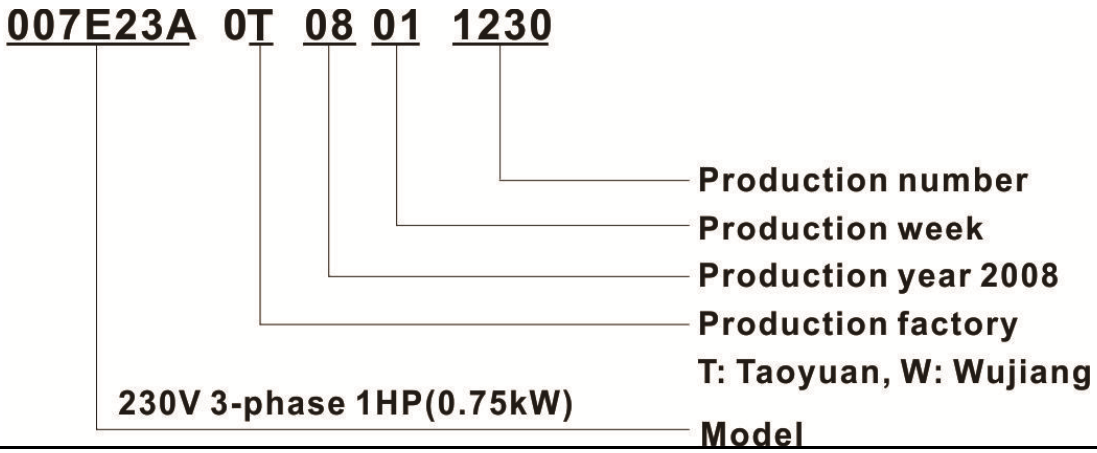


If the nameplate information does not correspond to your purchase order or if there are any problems, please contact your distributor.

### 1.1.4 Drive Frames and Appearances

**0.25-2HP/0.2-1.5kW (Frame A)**

VFD002E11A/21A/23A,
VFD004E11A/21A/23A/43A,
VFD007E21A/23A/43A,
VFD015E23A/43A,
VFD002E11C/21C/23C,
VFD004E11C/21C/23C/43C,
VFD007E21C/23C/43C,VFD015E23C/43C,
VFD002E11T/21T/23T,
VFD004E11T/21T/23T/43T,
VFD007E21T/23T/43T, VFD015E23T/43T,
VFD002E11P/21P/23P,
VFD004E11P/21P/23P/43P,
VFD007E21P/23P/43P, VFD015E23P/43P

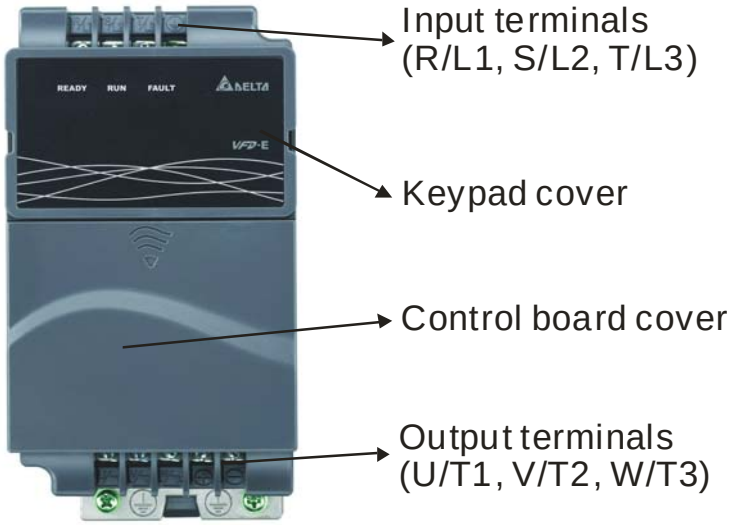

**1-5HP/0.75-3.7kW (Frame B)**

VFD007E11A, VFD015E21A,
VFD022E21A/23A/43A,
VFD037E23A/43A,
VFD007E11C, VFD015E21C,
VFD022E21C/23C/43C,
VFD037E23C/43C,

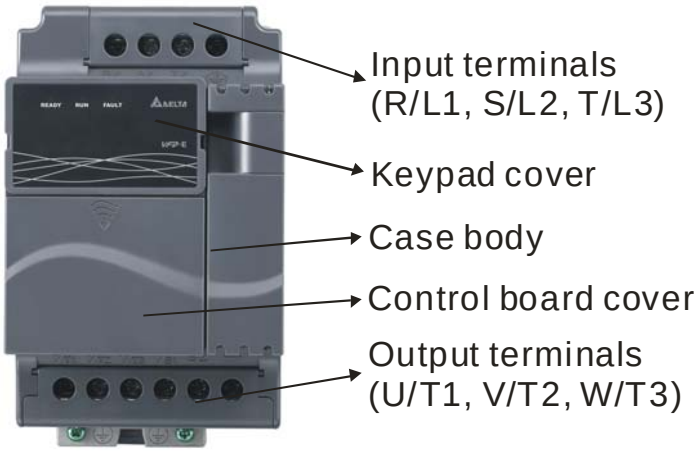


**7.5-15HP/5.5-11kW (Frame C)**

VFD055E23A/43A,
VFD075E23A/43A,
VFD055E23C/43C,
VFD075E23C/43C,
VFD110E23A/23C,
VFD110E43A/43C,

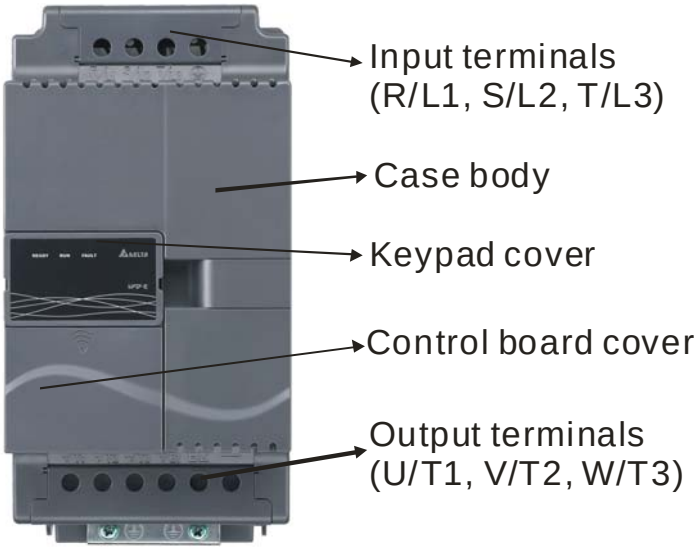


**20-30HP/15-22kW (Frame D)**

VFD150E23A/23C;
VFD150E43A/43C;
VFD185E43A/43C;
VFD220E43A/43C;

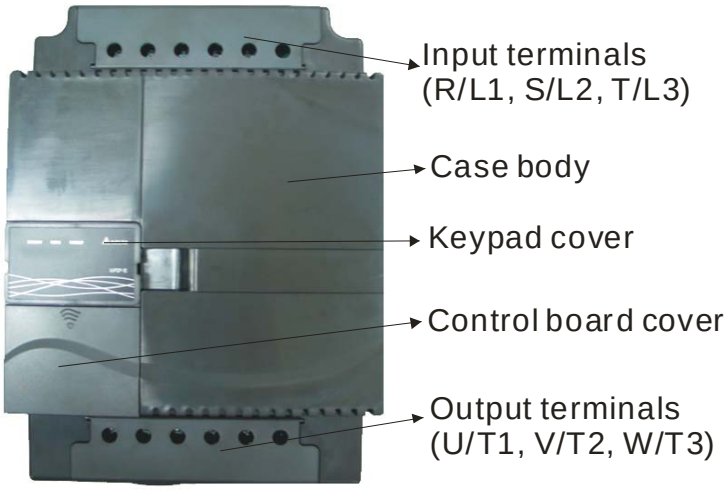

## Internal Structure

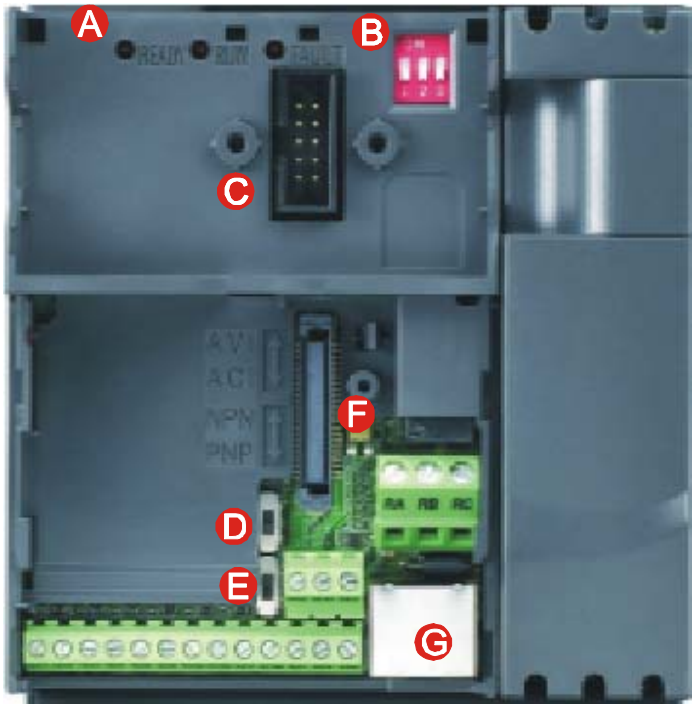


- **A** ● READY: power indicator
  ● RUN: status indicator
  ● FAULT: fault indicator
- **B** 1. Switch to ON for 50Hz, refer to P 01.00 to P01.02 for details
  2. Switch to ON for free run to stop refer to P02.02
  3. Switch to ON for setting frequency source to ACI (P 02.00=2)
- **C** Keypad mounting port
- **D** ACI terminal (ACI/AVI2 switch )
- **E** NPN/PNP
- **F** Mounting port for extension card
- **G** RS485 port (RJ-45)

**NOTE**

The LED “READY” will light up after applying power. The light won’t be off until the capacitors are discharged to safe voltage levels after power off.

## RFI Jumper Location

**Frame A: near the output terminals (U/T1, V/T2, W/T3)**

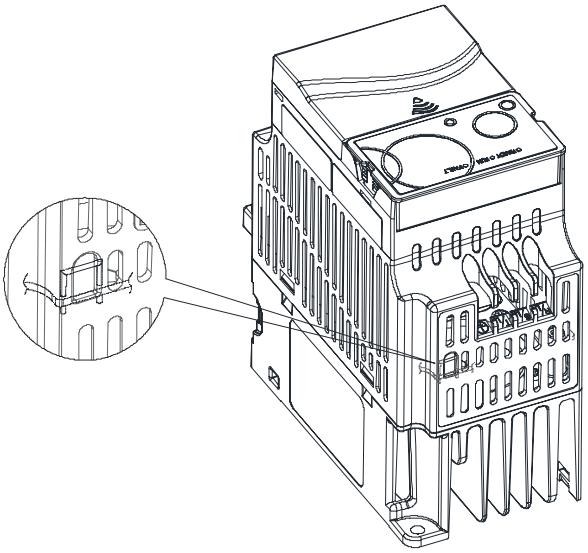

**Frame B: above the nameplate**

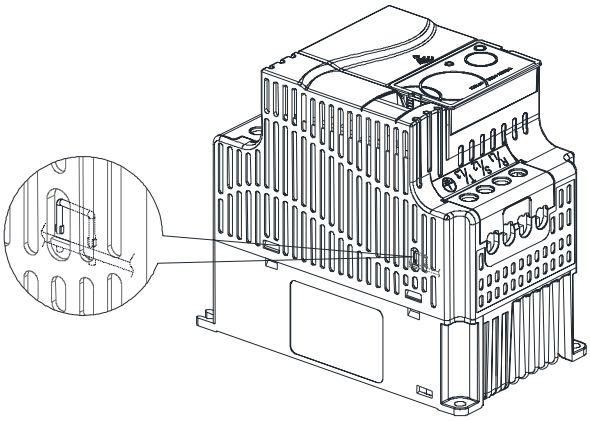

**Frame C (230V): near the input terminals (R/L1, S/L2, T/L3)**

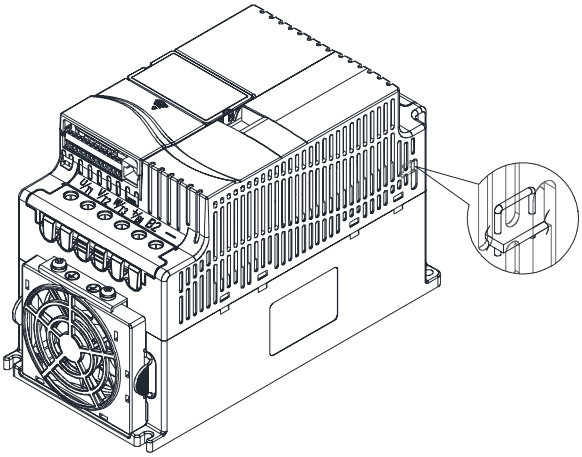

**Frame C (460V): near the input terminals (R/L1, S/L2, T/L3)**

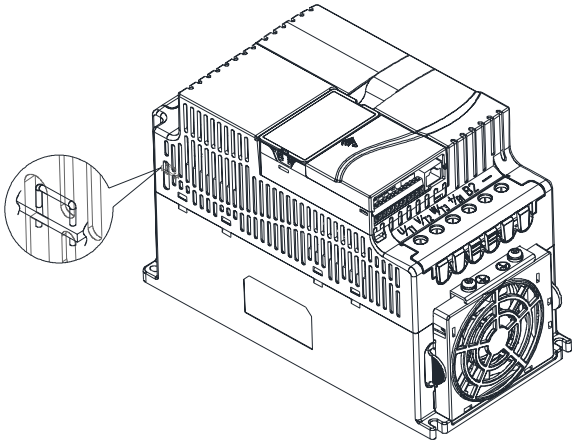

**Frame D: near the input terminals (R/L1, S/L2, T/L3), under terminal R/L1.**

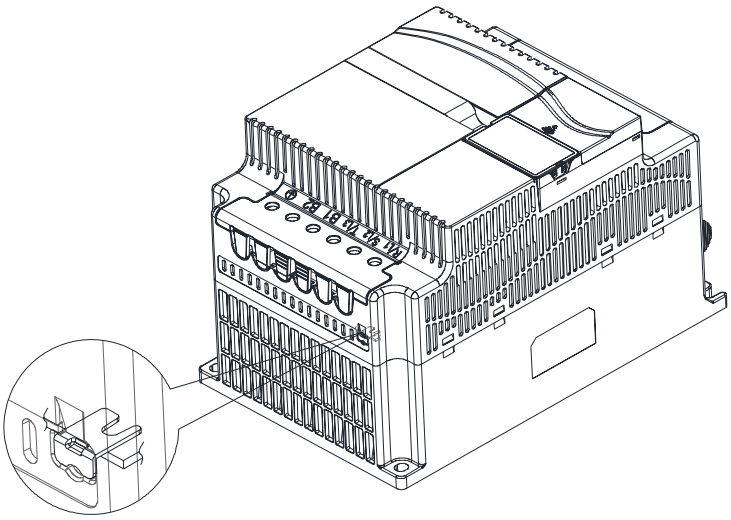

Main power isolated from earth:

If the AC motor drive is supplied from an isolated power (IT power), the RFI jumper must be cut off. Then the RFI capacities (filter capacitors) will be disconnected from ground to prevent circuit damage

(according to IEC 61800-3) and reduce earth leakage current.

**CAUTION!**

1. After applying power to the AC motor drive, do not cut off the RFI jumper. Therefore, make sure that main power has been switched off before cutting the RFI jumper.
2. The gap discharge may occur when the transient voltage is higher than 1,000V. Besides, electro-magnetic compatibility of the AC motor drives will be lower after cutting the RFI jumper.
3. Do NOT cut the RFI jumper when main power is connected to earth.
4. The RFI jumper cannot be cut when Hi-pot tests are performed. The mains power and motor must be separated if high voltage test is performed and the leakage currents are too high.
5. To prevent drive damage, the RFI jumper connected to ground shall be cut off if the AC motor drive is installed on an ungrounded power system or a high resistance-grounded(over 30 ohms) power system or a corner grounded TN system.

| Frame | Power range | Models |
|---|---|---|
| **A** | 0.25-2hp<br>(0.2-1.5kW) | VFD002E11A/11C/11T/11P; VFD002E21A/21C/21T/21P; VFD002E23A/23C/23T/23P;<br><br>VFD004E11A/11C/11T/11P; VFD004E21A/21C/21T/21P; VFD004E23A/23C/23T/23P; VFD004E43A/43C/43T/43P; VFD007E21A/21C/21T/21P; VFD007E23A/23C/23T/23P; VFD007E43A/43C/43T/43P;<br><br>VFD015E23A/23C/23T/23P; VFD015E43A/43C/43T/43P; |
| **B** | 1-5hp<br>(0.75-3.7kW) | VFD007E11A/11C; VFD015E21A/21C;<br>VFD022E21A/21C; VFD022E23A/23C; VFD022E43A/43C;<br>**VFD037E23A/23C; VFD037E43A/43C;** |
| **C** | 7.5-15hp<br>(5.5-11kW) | **VFD055E43A/43C; VFD075E43A/43C; VFD110E43A/43C;** |
| **D** | 20-30hp<br>(15-22kW) | VFD150E23A/23C; VFD150E43A43C;<br>**VFD185E43A/43C; VFD220E43A/43C;** |

Note: Frame C VFD055E23A/23C; VFD075E23A/23C; VFD110E23A/23C; do not provide RFI functions.

## 1.1.5 Remove Instructions

| | |
|---|---|
| **Remove Keypad**<br><br>Press and hold in the latch on each side of cover then pull the cover up to release.<br><br> | **Remove RST Terminal Cover**<br><br>For Frame B, C and D: it only needs to turn the cover lightly to open it.<br>For Frame A, it doesn't have cover and can be wired directly.<br> |
| **Remove UVW Terminal Cover**<br><br>For Frame B, C and D: it only needs to turn the cover lightly to open it.<br>For Frame A, it doesn't have cover and can be wired directly.<br> | **Remove Front Cover**<br><br>Press the control board terminal cover first as shown in Figure A, then slide downwards as shown in Figure B, you can easily remove it.<br> 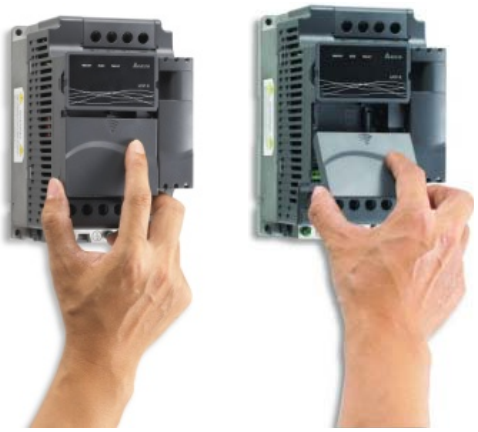 <br>Figure A Figure B |

## Remove Cooling Fan

Press and hold in the latch on each side of the fan and pull the fan up to release.

Frame A

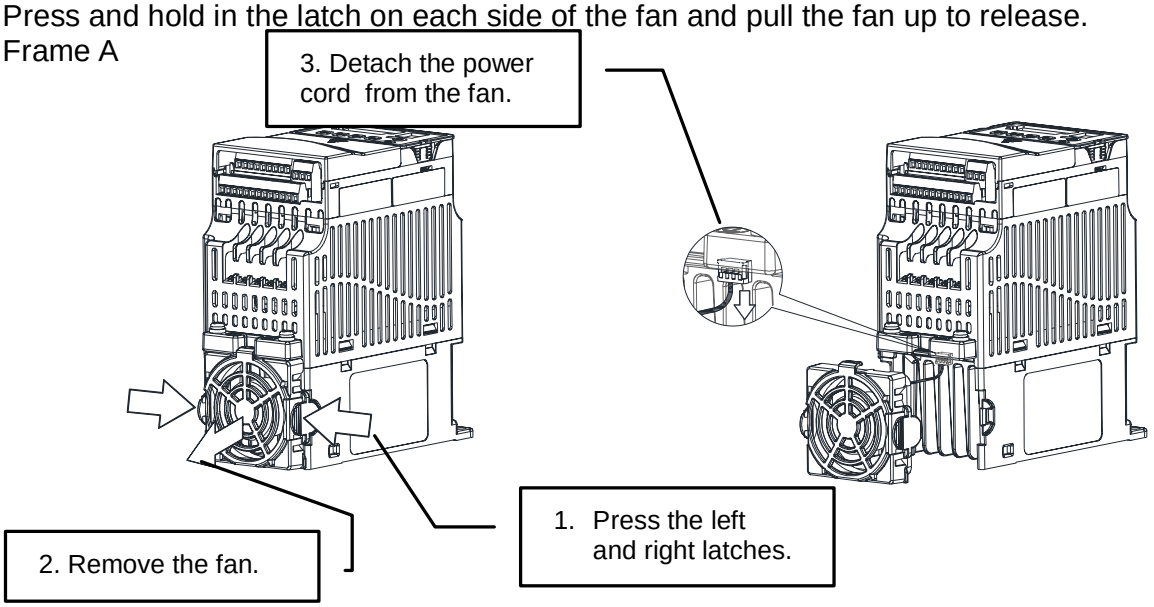


Frame B

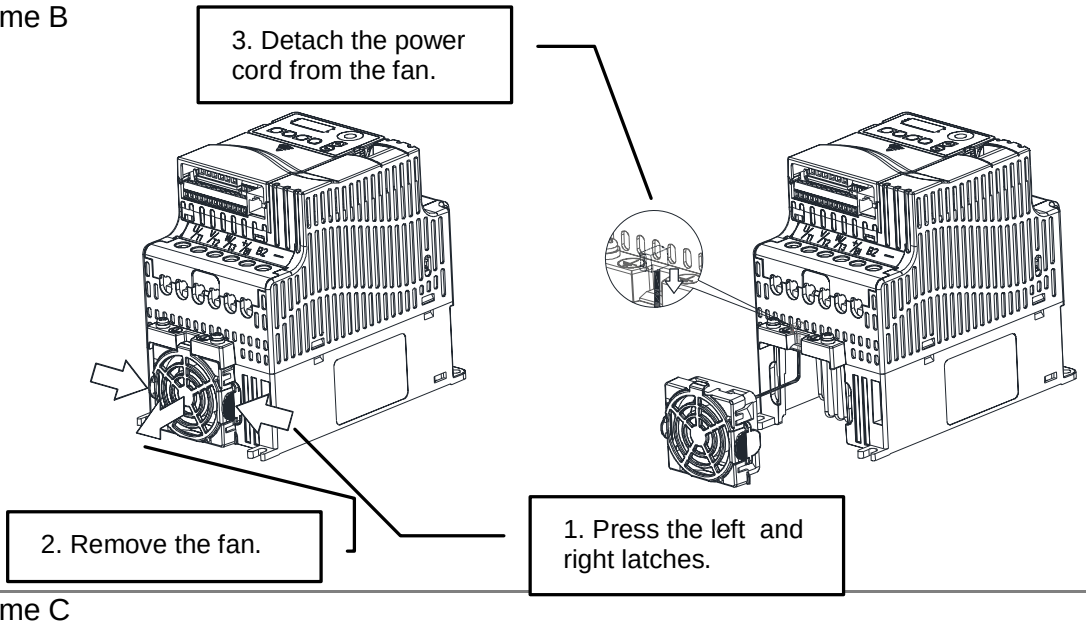


Frame C

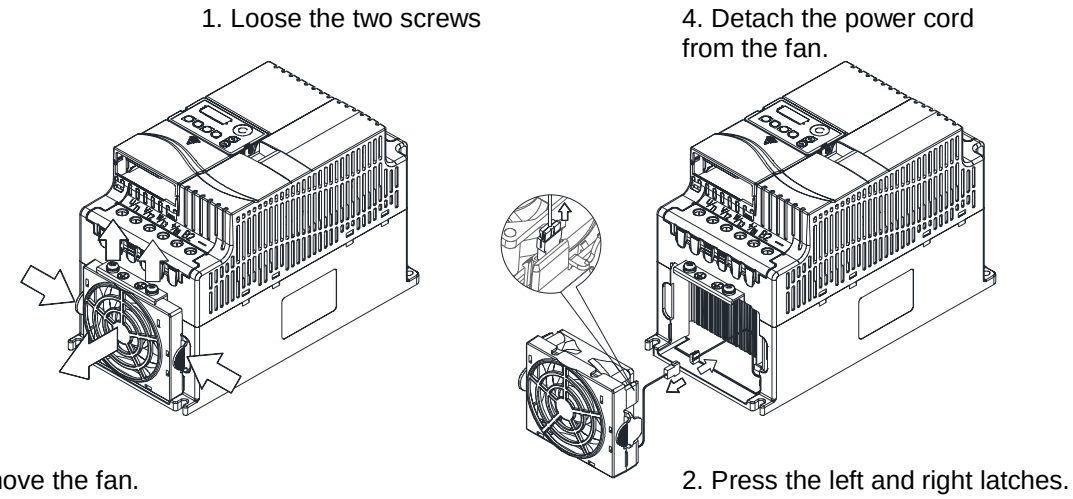

Frame D

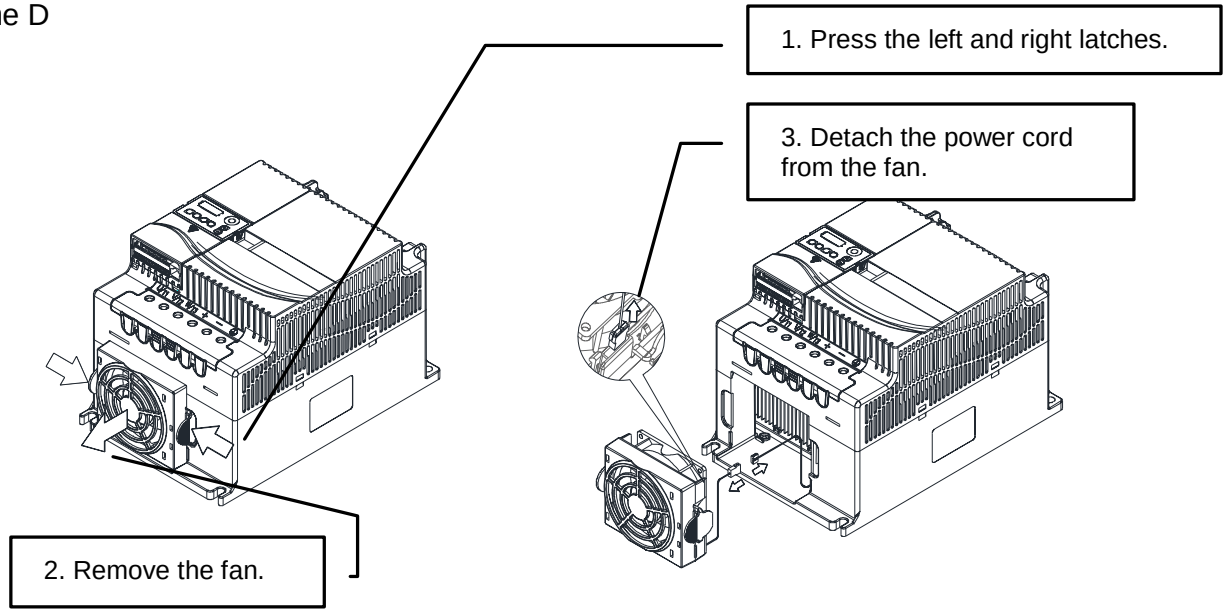


## Remove Extension Card

For Frame A, Frame B, Frame C and Frame D

Loosen the screws first then press and hold in the latches on each side of the extension card and pull the extension card up to release. On the other hand, it can install the extension card into the AC motor drive with screws.

## 1.2 Preparation for Installation and Wiring

### 1.2.1 Ambient Conditions

**Install the AC motor drive in an environment with the following conditions:**

| | | |
|---|---|---|
| **Operation** | Air Temperature: | -10 ~ +50°C (14 ~ 122°F) for UL & cUL<br>-10 ~ +40°C (14 ~ 104°F) for side-by-side mounting |
| | Relative Humidity: | <90%, no condensation allowed |
| | Atmosphere pressure: | 86 ~ 106 kPa |
| | Installation Site Altitude: | <1000m |
| | Vibration: | 10Hz≦f≦57Hz, Fix Amplitude: 0.075mm<br>57Hz≦f≦150Hz, fix Acceleration: 1G<br>(According to IEC 60068-2-6) |
| **Storage Transportation** | Temperature: | -20°C ~ +60°C (-4°F ~ 140°F) |
| | Relative Humidity: | <90%, no condensation allowed |
| | Atmosphere pressure: | 86 ~ 106 kPa |
| | Vibration: | According to ISTA Procedure 1A |
| **Pollution Degree** | 2: good for a factory type environment. | |

*Minimum Mounting Clearances*

**Frame A Mounting Clearances**

Single drive

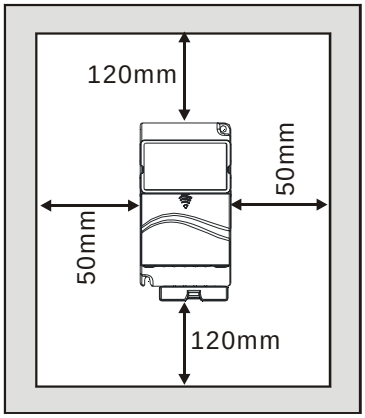


Side-by-side installation

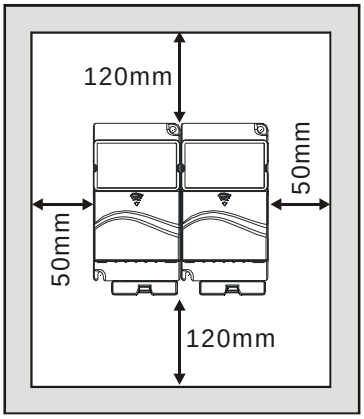


Air flow

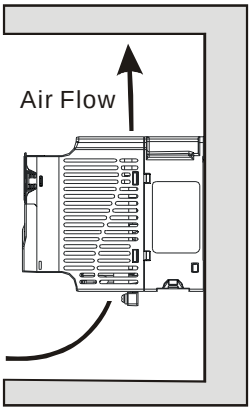


**Frame B, C and D Mounting Clearances**

Single drive

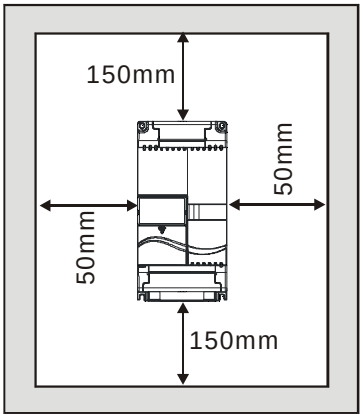


Side-by-side installation

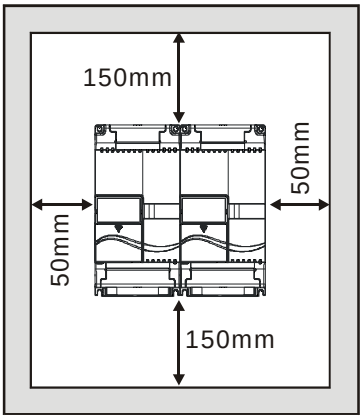


Air flow

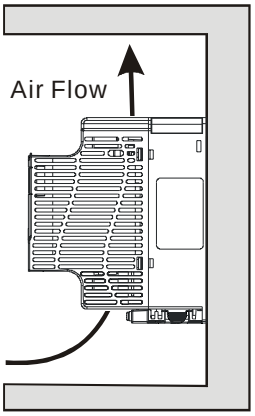

**For VFD-E-P series: heat sink system example**

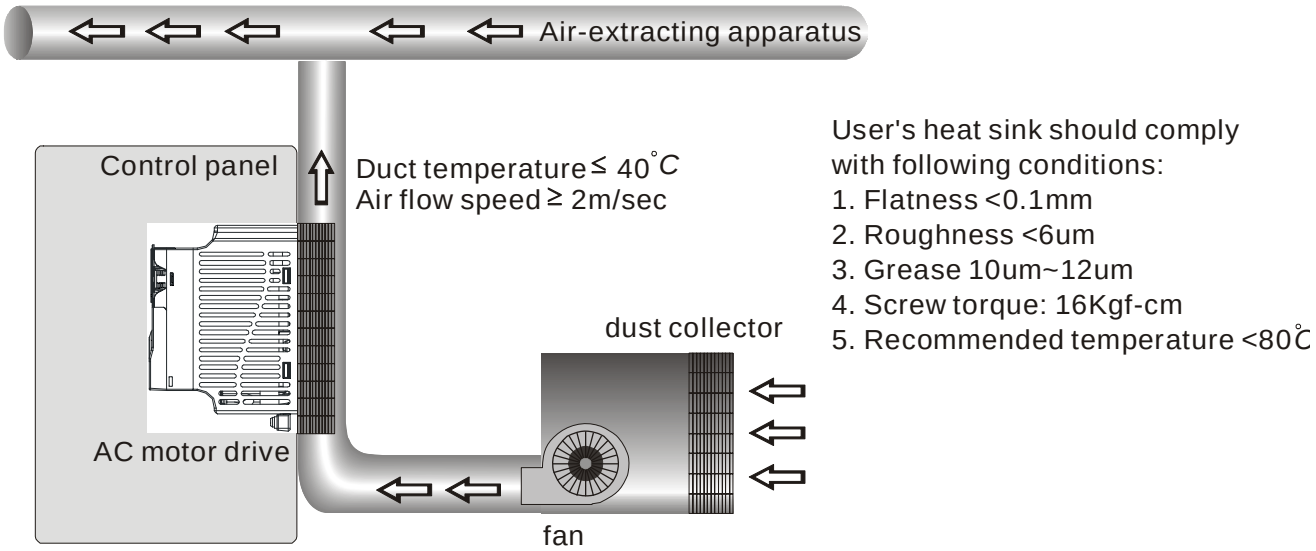


**CAUTION!**

1. Operating, storing or transporting the AC motor drive outside these conditions may cause damage to the AC motor drive.
2. Failure to observe these precautions may void the warranty!
3. Mount the AC motor drive vertically on a flat vertical surface object by screws. Other directions are not allowed.
4. The AC motor drive will generate heat during operation. Allow sufficient space around the unit for heat dissipation.
5. The heat sink temperature may rise to 90°C when running. The material on which the AC motor drive is mounted must be noncombustible and be able to withstand this high temperature.
6. When AC motor drive is installed in a confined space (e.g. cabinet), the surrounding temperature must be within 10 ~ 40°C with good ventilation. DO NOT install the AC motor drive in a space with bad ventilation.
7. Prevent fiber particles, scraps of paper, saw dust, metal particles, etc. from adhering to the heatsink.
8. When installing multiple AC more drives in the same cabinet, they should be adjacent in a row with enough space in-between. When installing one AC motor drive below another one, use a metal separation between the AC motor drives to prevent mutual heating.

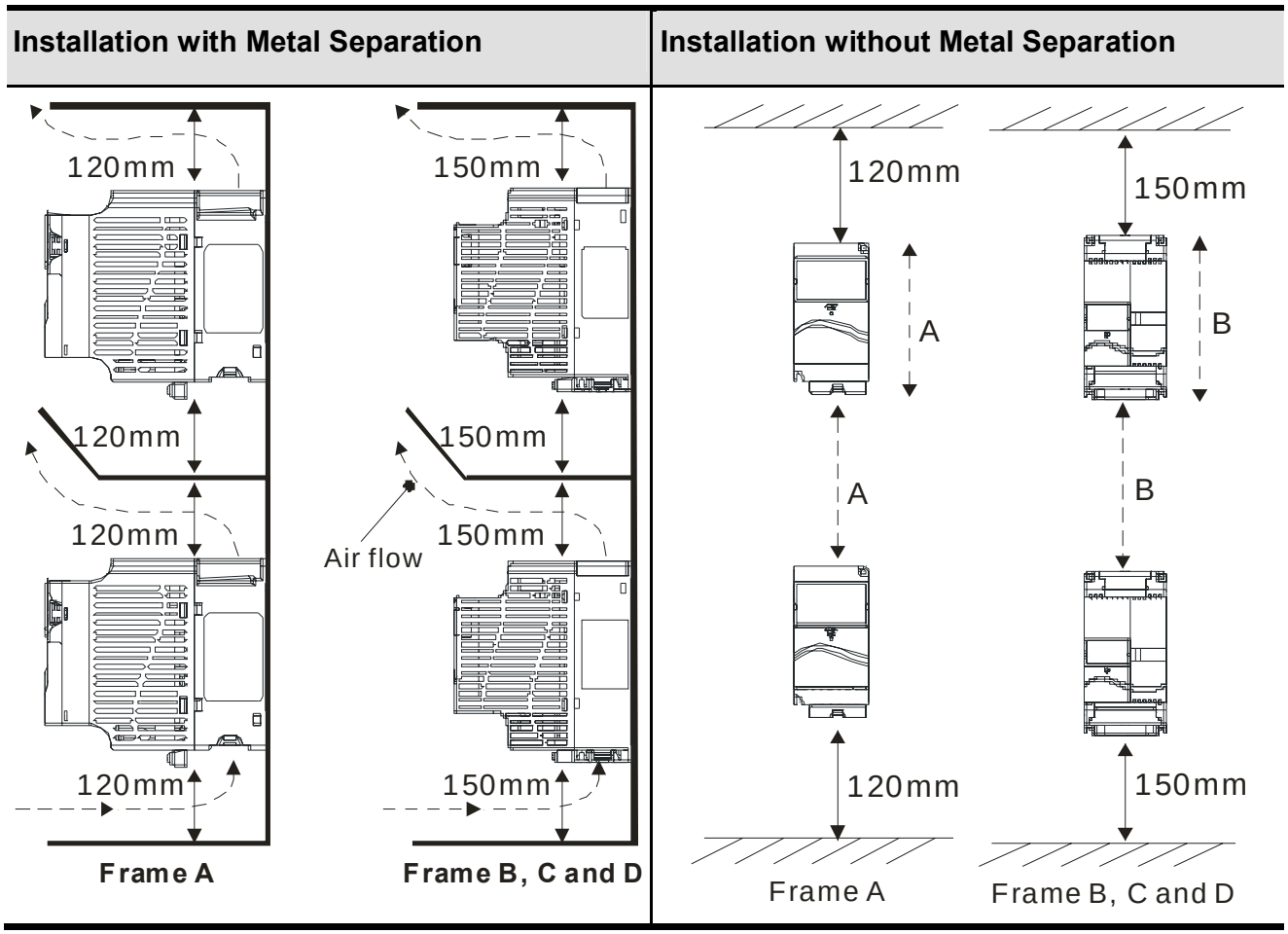


| 1φ/110V | | |
|---|---|---|
| **Model** | **Total Power Dissipation (W)** | **Flow rate (CFM)** |
| VFD002E11A/C/T | 22 | Natural Convection |
| VFD004E11A/C/T | 33 | Natural Convection |
| VFD007E11A | 54 | 14 |
| VFD002E11P | 22 | - |
| VFD004E11P | 33 | - |
| **1φ/230V** | | |
| **Model** | **Total Power Dissipation (W)** | **Flow rate (CFM)** |
| VFD002E21A/C/T | 22 | Natural Convection |
| VFD004E21A/C/T | 34 | Natural Convection |
| VFD007E21A/C/T | 57 | Natural Convection |
| VFD015E21A/C | 97 | 14 |
| VFD022E21A/C | 142 | 14 |
| VFD002E21P | 22 | - |
| VFD004E21P | 34 | - |
| VFD007E21P | 57 | - |
| **3φ/230V** | | |
| **Model** | **Total Power Dissipation (W)** | **Flow rate (CFM)** |
| VFD002E23 A/C/T | 19 | Natural Convection |
| VFD004E23 A/C/T | 29 | Natural Convection |
| VFD007E23 A/C/T | 49 | Natural Convection |
| VFD015E23 A/C/T | 87 | 14 |

| | | |
|---|---|---|
| VFD022E23A/C | 117 | 14 |
| VFD037E23A/C | 182 | 14 |
| VFD055E23A/C | 265 | 36 |
| VFD075E23A/C | 352 | 36 |
| VFD110E23A/C | 480 | 36 |
| VFD150E23A/C | 695 | 72 |
| VFD002E23P | 19 | - |
| VFD004E23P | 29 | - |
| VFD007E23P | 49 | - |
| VFD015E23P | 87 | - |
| **3φ/480V** | | |
| **Model** | **Total Power Dissipation (W)** | **Flow rate (CFM)** |
| VFD004E43A/C/T | 30 | Natural Convection |
| VFD007E43A/C/T | 51 | Natural Convection |
| VFD015E43A/C/T | 84 | 14 |
| VFD022E43A/C | 100 | 14 |
| VFD037E43A/C | 155 | 14 |
| VFD055E43A/C | 235 | 36 |
| VFD075E43A/C | 327 | 36 |
| VFD110E43 A/C | 436 | 36 |
| VFD150E43 A/C | 538 | 88 |
| VFD185E43 A/C | 570 | 88 |
| VFD220E43 A/C | 676 | 88 |
| VFD004E43P | 30 | - |
| VFD007E43P | 51 | - |
| VFD015E43P | 84 | - |

## 1.2.2 DC-bus Sharing: Connecting the DC-bus of the AC Motor Drives in Parallel

1. This function is not for VFD-E-T series.
2. The AC motor drives can absorb mutual voltage that generated to DC bus when deceleration.
3. Enhance brake function and stabilize the voltage of the DC bus.
4. The brake module can be added to enhance brake function after connecting in parallel.
5. Only the same power system and capacity can be connected in parallel.
6. It is recommended to connect 5 AC motor drives in parallel (no limit in horsepower but these 5 drives should be the same power system and capacity).

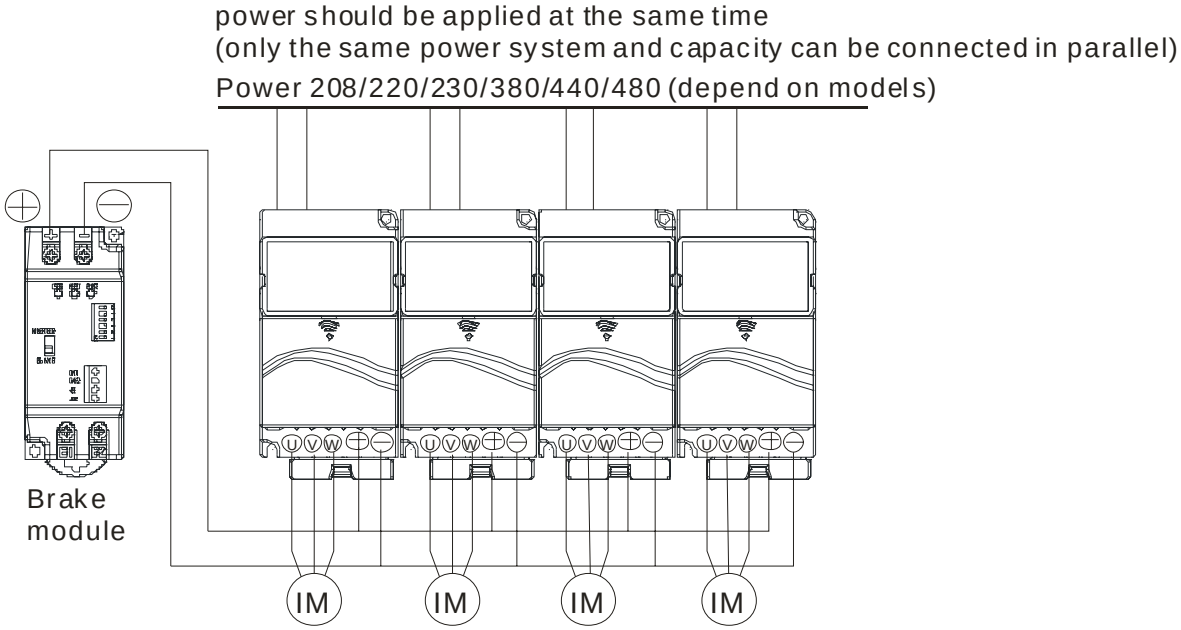


For frame A, terminal + (-) is connected to the terminal + (-) of the brake module.
For frame B, C and D, terminal +/B1 (-) is connected to the terminal + (-) of the brake module.

## 1.3 Dimensions

Frame A

VFD002E11A/11C/11T; VFD002E21A/21C/21T; VFD002E23A/23C/23T; VFD004E11A/11C/11T; VFD004E21A/21C/21T; VFD004E23A/23C/23T; VFD004E43A/43C/43T; VFD007E21A/21C/21T; VFD007E23A/23C/23T; VFD007E43A/43C/43T;

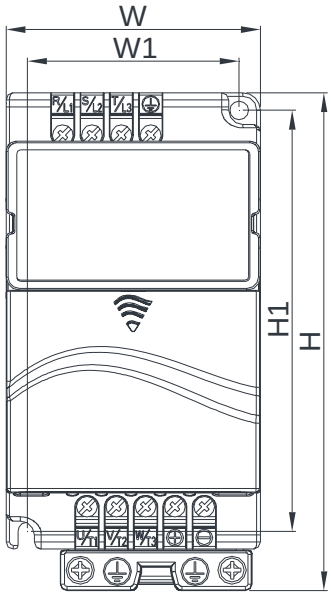


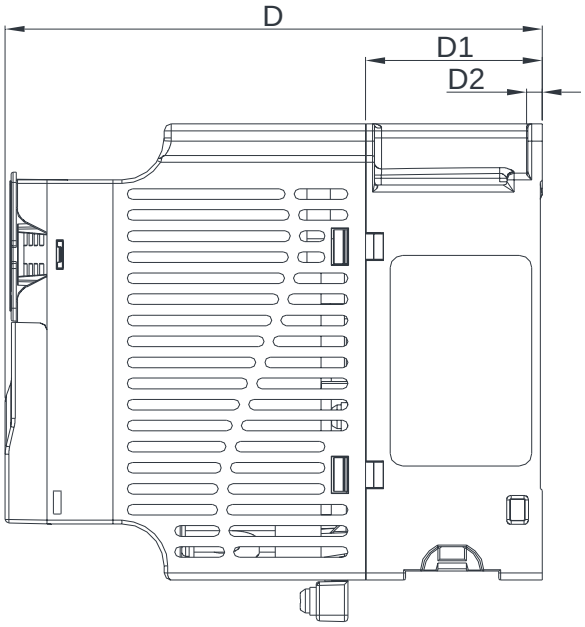


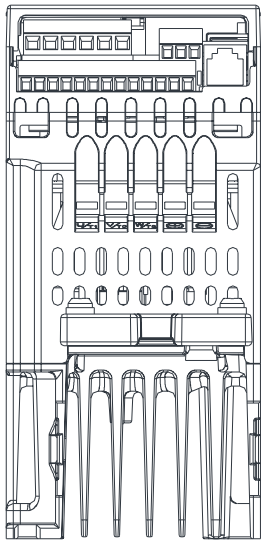

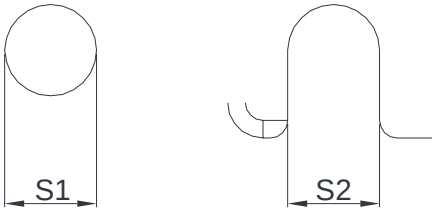


Unit: mm [inch]

| Frame | W | W1 | H | H1 | D | D1 | D2 | S1 | S2 |
|---|---|---|---|---|---|---|---|---|---|
| A1 | 72.0<br>[2.83] | 60.0<br>[2.36] | 142.0<br>[5.59] | 120.0<br>[4.72] | 152.0<br>[5.98] | 50.0<br>[1.97] | 4.5<br>[0.18] | 5.2<br>[0.20] | 5.2<br>[0.20] |

**Frame A**

**VFD015E23A/23C/23T; VFD015E43A/43C/43T;**

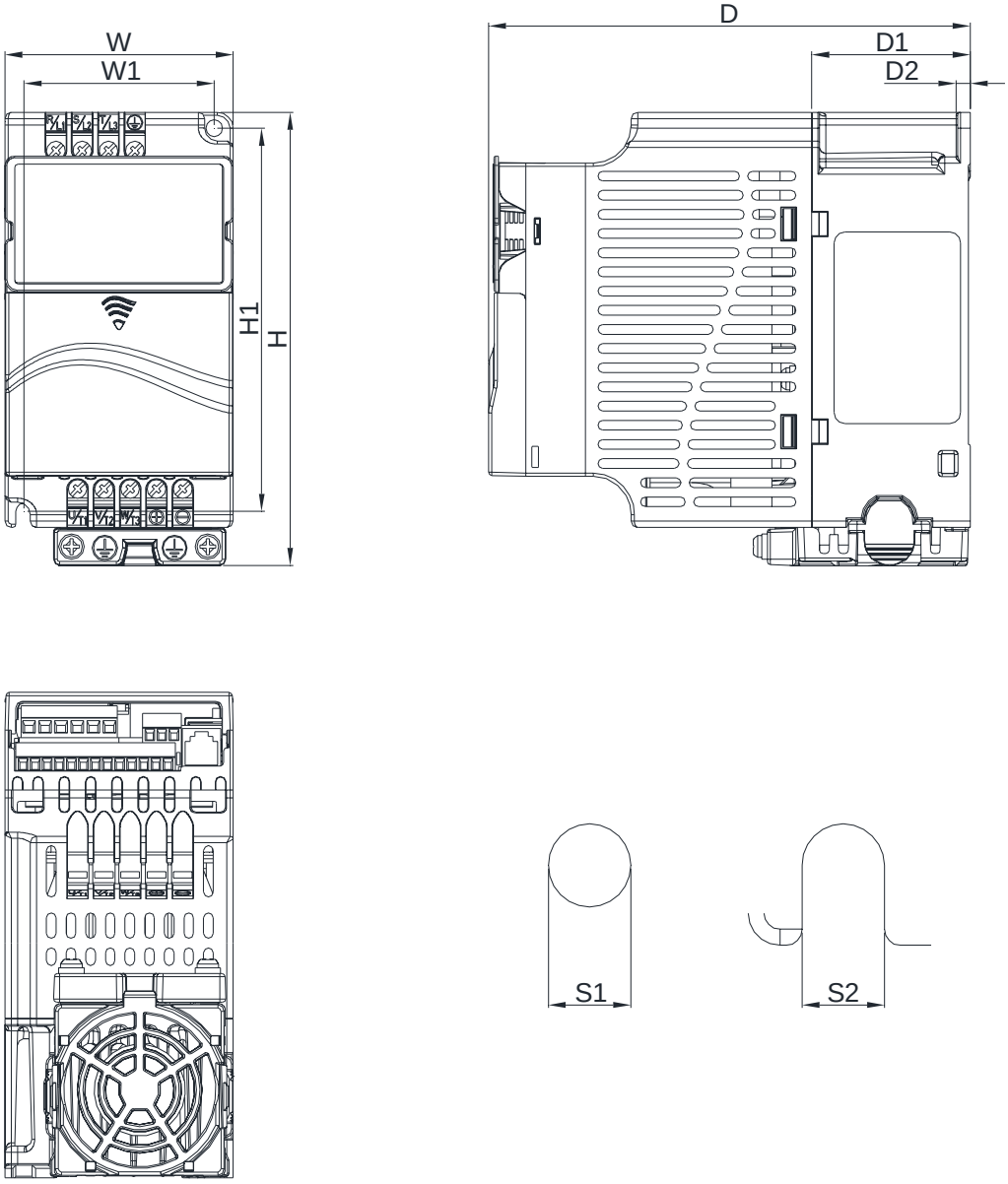


Unit: mm [inch]

| Frame | W | W1 | H | H1 | D | D1 | D2 | S1 | S2 |
|---|---|---|---|---|---|---|---|---|---|
| A2 | 72.0<br>[2.83] | 60.0<br>[2.36] | 142.0<br>[5.59] | 120.0<br>[4.72] | 152.0<br>[5.98] | 50.0<br>[1.97] | 4.5<br>[0.18] | 5.2<br>[0.20] | 5.2<br>[0.20] |

**Frame A**
**VFD002E11P/21P/23P; VFD004E11P/21P/23P/43P; VFD007E21P/23P/43P; VFD015E23P/43P;**

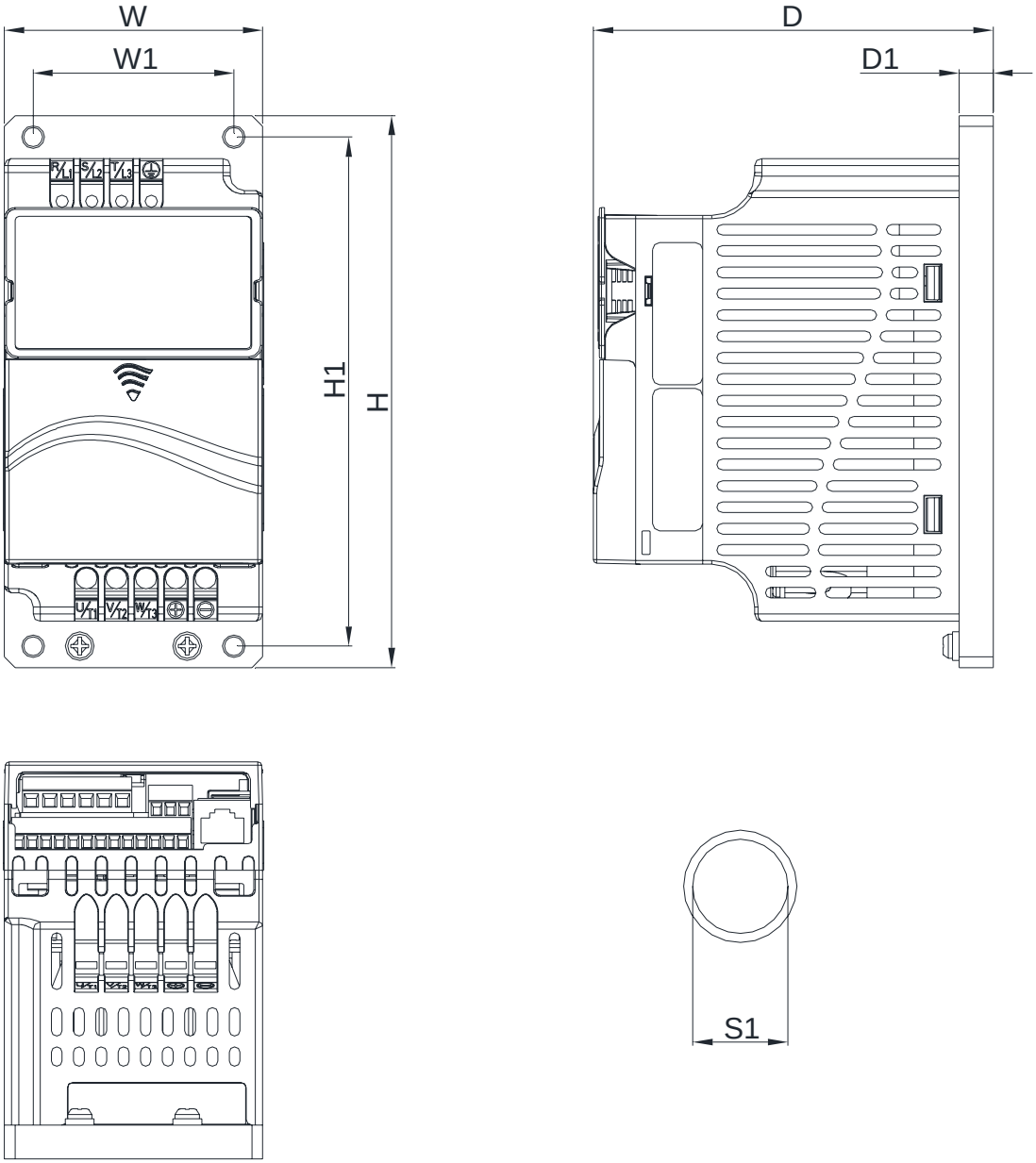


Unit: mm [inch]

| Frame | W | W1 | H | H1 | D | D1 | S1 |
|---|---|---|---|---|---|---|---|
| A3 | 72.0<br>[2.83] | 56.0<br>[2.20] | 155.0<br>[6.10] | 143.0<br>[5.63] | 111.5<br>[4.39] | 9.5<br>[0.37] | 5.3<br>[0.21] |

**Frame B**

**VFD007E11A/11C; VFD015E21A/21C; VFD022E21A/21C; VFD022E23A/23C; VFD022E43A/43C; VFD037E23A/23C; VFD037E43A/43C;**

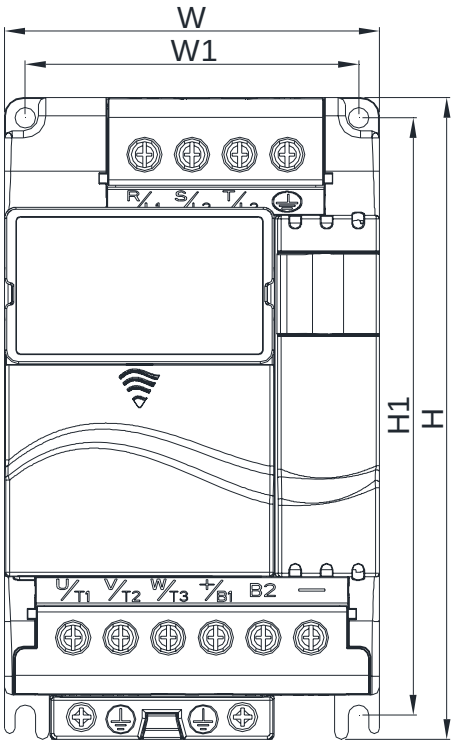


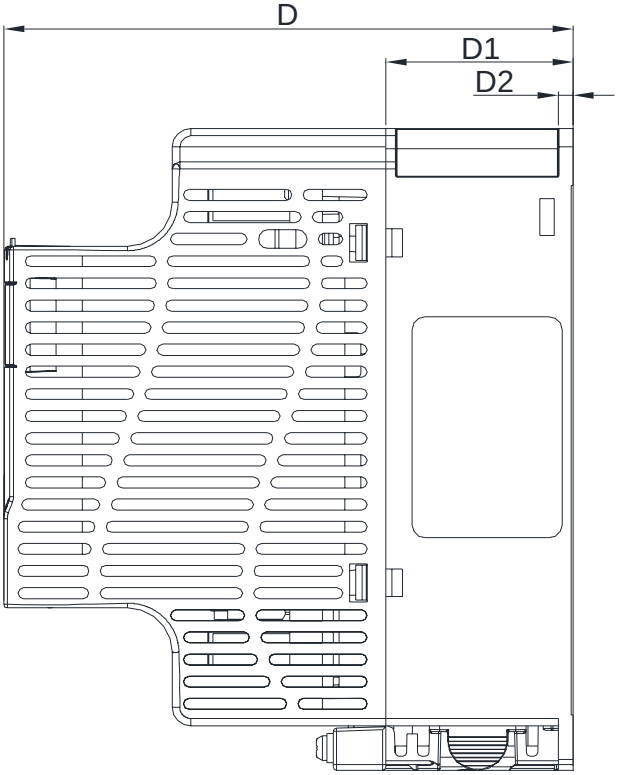


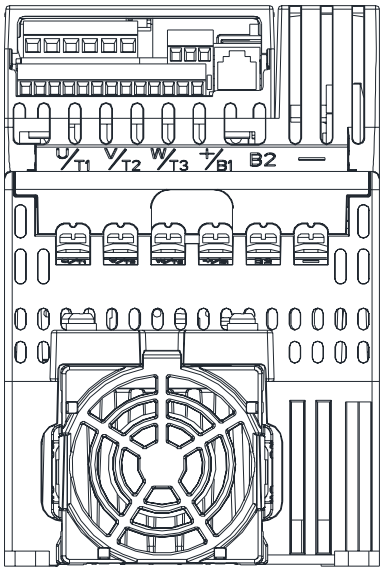


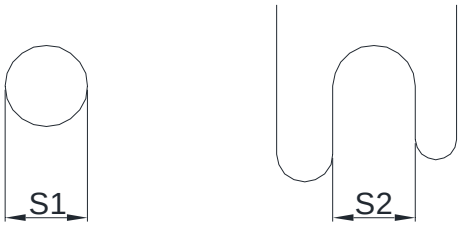


Unit: mm [inch]

| Frame | W | W1 | H | H1 | D | D1 | D2 | S1 | S2 |
|---|---|---|---|---|---|---|---|---|---|
| B | 100.0 [3.94] | 89.0 [3.50] | 174.0 [6.86] | 162.0 [6.38] | 152.0 [5.98] | 50.0 [1.97] | 4.0 [0.16] | 5.5 [0.22] | 5.5 [0.22] |

Frame C

**VFD055E23A/23C; VFD055E43A/43C; VFD075E23A/23C; VFD075E43A/43C; VFD110E23A/23C; VFD110E43A/43C;**

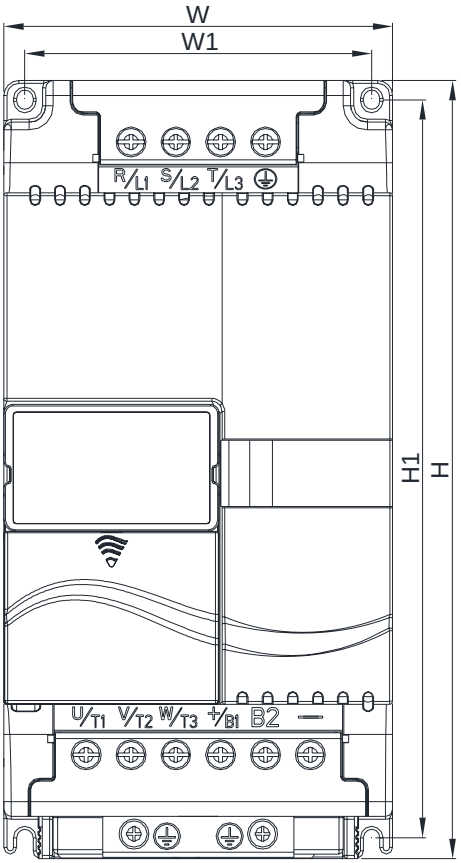


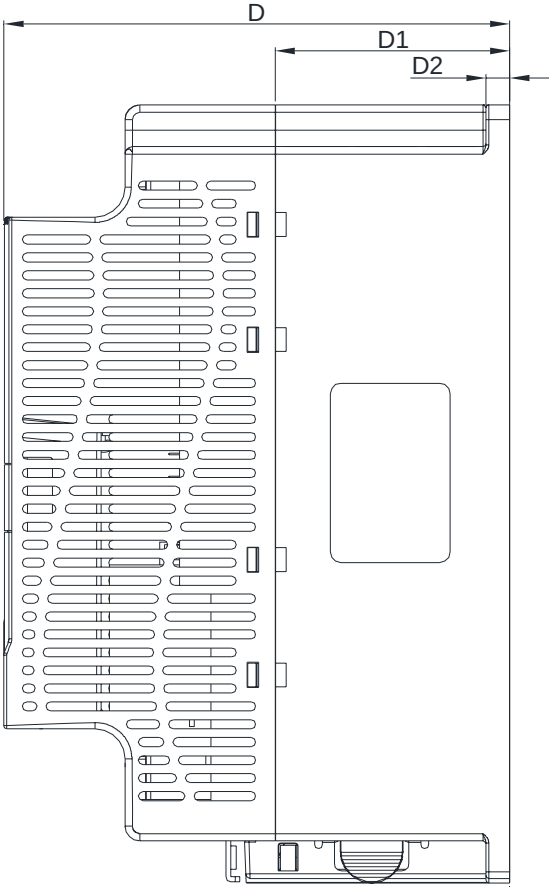


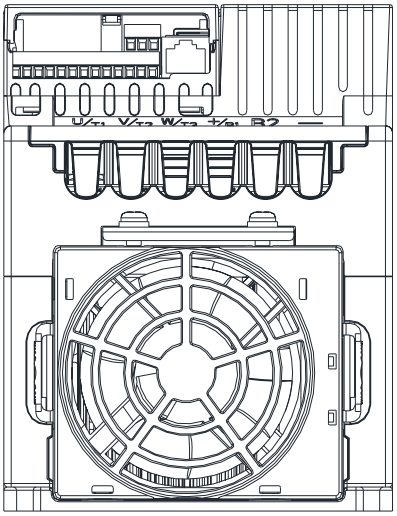

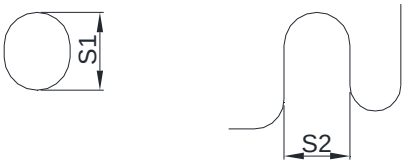


Unit: mm [inch]

| Frame | W | W1 | H | H1 | D | D1 | D2 | S1 | S2 |
|---|---|---|---|---|---|---|---|---|---|
| C | 130.0<br>[5.12] | 116.0<br>[4.57] | 260.0<br>[10.24] | 246.5<br>[9.70] | 169.2<br>[6.66] | 78.5<br>[3.09] | 8.0<br>[0.31] | 6.5<br>[0.26] | 5.5<br>[0.22] |

**Frame D**

**VFD150E23A/23C; VFD150E43A43C; VFD185E43A/43C; VFD220E43A/43C;**

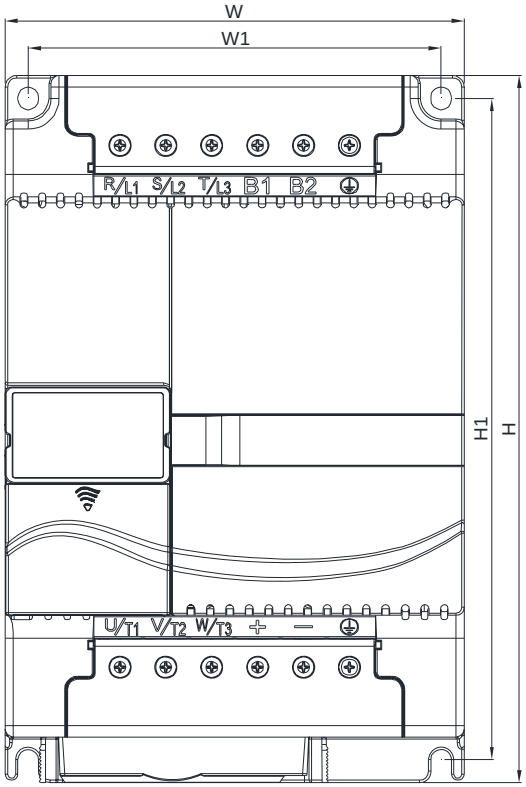


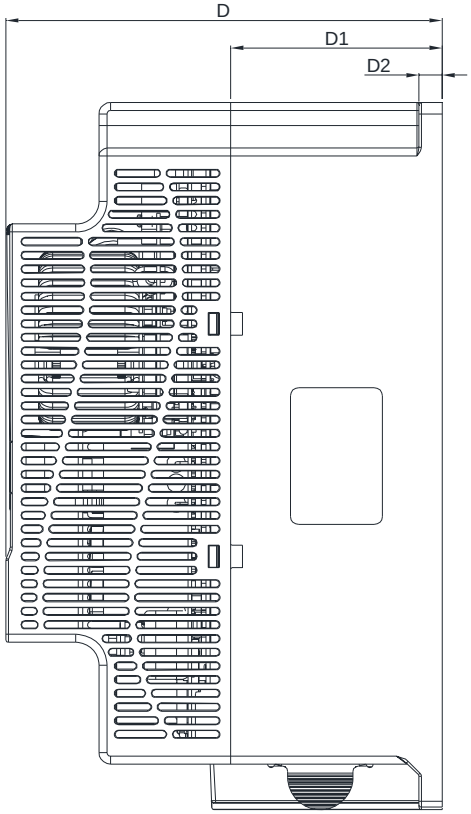


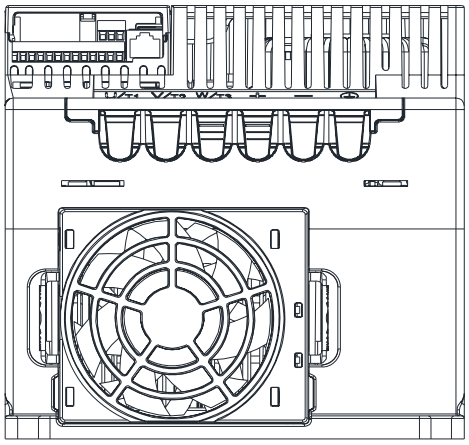

Unit: mm [inch]

| Frame | W | W1 | H | H1 | D | D1 | D2 | S1 | S2 |
|---|---|---|---|---|---|---|---|---|---|
| D | 200.0 [7.87] | 180.0 [7.09] | 310.0 [12.20] | 290.0 [11.42] | 190.0 [7.48] | 92.0 [3.62] | 10.0 [0.39] | 10.0 [0.39] | 9.0 [0.35] |

# *Chapter 2 Installation & Wiring*

After removing the front cover, check if the power and control terminals are clear. Be sure to observe the following precautions when wiring.

■ General Wiring Information

Applicable Codes

All VFD-E series are Underwriters Laboratories, Inc. (UL) and Canadian Underwriters Laboratories (cUL) listed, and therefore comply with the requirements of the National Electrical Code (NEC) and the Canadian Electrical Code (CEC).

Installation intended to meet the UL and cUL requirements must follow the instructions provided in “Wiring Notes” as a minimum standard. Follow all local codes that exceed UL and cUL requirements. Refer to the technical data label affixed to the AC motor drive and the motor nameplate for electrical data.

The "Line Fuse Specification" in Appendix B, lists the recommended fuse part number for each VFD-E Series part number. These fuses (or equivalent) must be used on all installations where compliance with U.L. standards is a required.

**CAUTION!**

1. Make sure that power is only applied to the R/L1, S/L2, T/L3 terminals. Failure to comply may result in damage to the equipment. The voltage and current should lie within the range as indicated on the nameplate.
2. All the units must be grounded directly to a common ground terminal to prevent lightning strike or electric shock.
3. Please make sure to fasten the screw of the main circuit terminals to prevent sparks which is made by the loose screws due to vibration.
4. Check following items after finishing the wiring:
   A. Are all connections correct?
   B. No loose wires?
   C. No short-circuits between terminals or to ground?

**DANGER!**

1. A charge may still remain in the DC bus capacitors with hazardous voltages even if the power has been turned off. To prevent personal injury, please ensure that the power is turned off and wait ten minutes for the capacitors to discharge to safe voltage levels before opening the AC motor drive.
2. Only qualified personnel familiar with AC motor drives is allowed to perform installation, wiring and commissioning.
3. Make sure that the power is off before doing any wiring to prevent electric shock.

## 2.1 Wiring

Users must connect wires according to the circuit diagrams on the following pages. Do not plug a modem or telephone line to the RS-485 communication port or permanent damage may result. The pins 1 & 2 are the power supply for the optional copy keypad only and should not be used for RS-485 communication.

Figure 1 for models of VFD-E Series
VFD002E11A/21A, VFD004E11A/21A, VFD007E21A, VFD002E11C/21C, VFD004E11C/21C, VFD007E21C, VFD002E11P/21P, VFD004E11P/21P, VFD007E21P

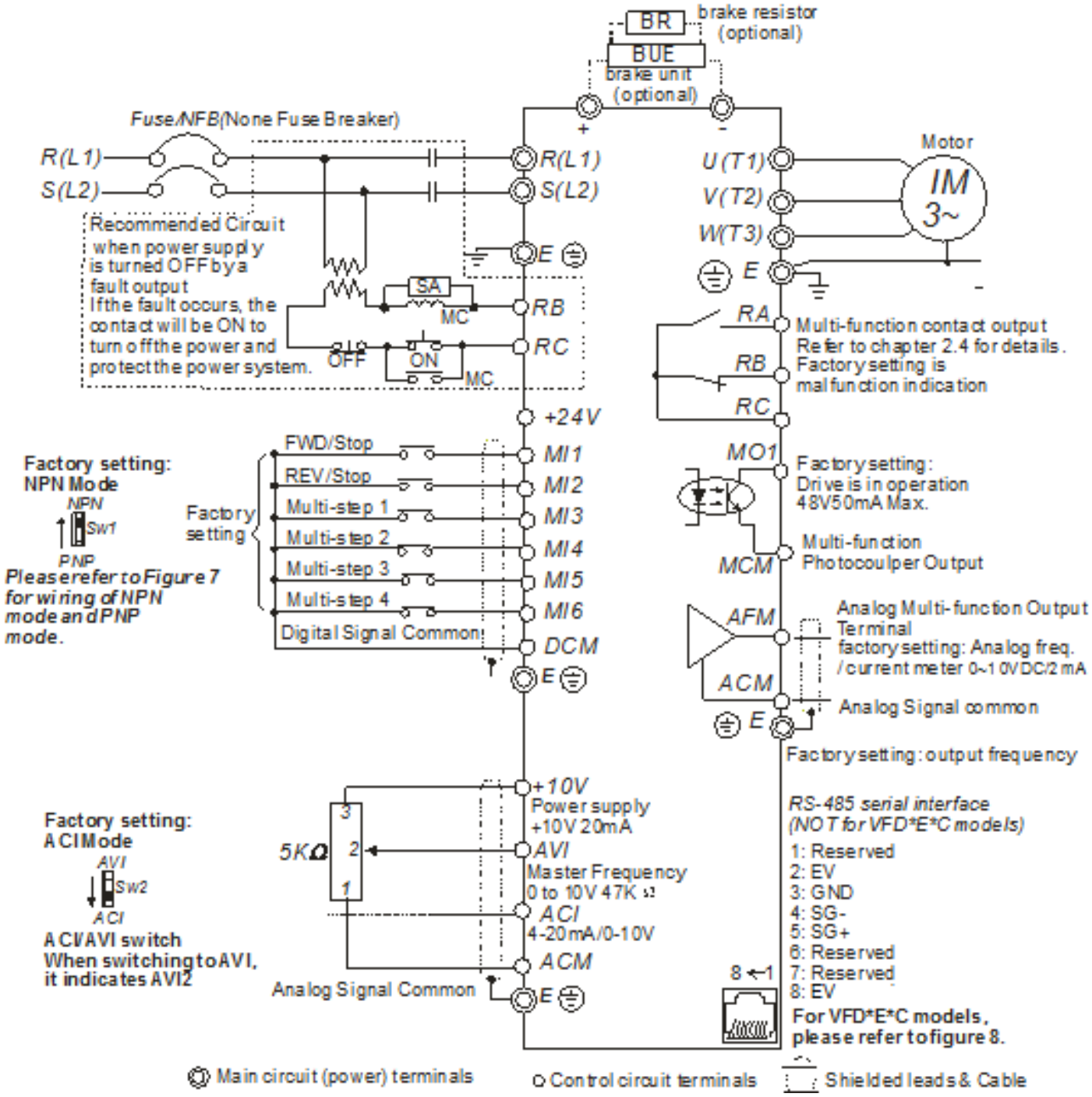

Figure 2 for models of VFD-E Series
VFD002E23A, VFD004E23A/43A, VFD007E23A/43A, VFD015E23A/43A, VFD002E23C, VFD004E23C/43C, VFD007E23C/43C, VFD015E23C/43C, VFD002E23P, VFD004E23P/43P, VFD007E23P/43P, VFD015E23P/43P

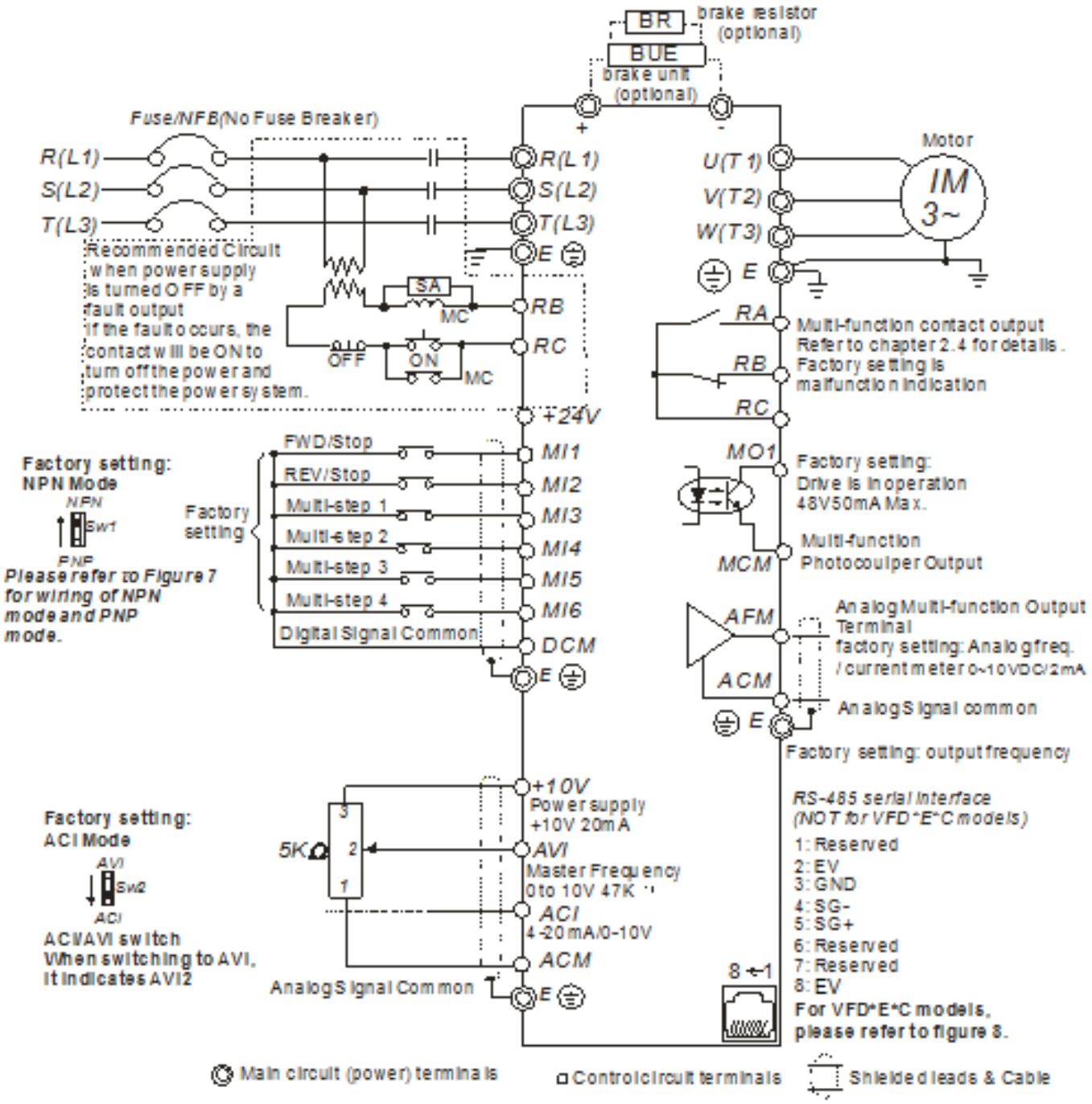

Figure 3 for models of VFD-E Series
VFD007E11A, VFD015E21A, VFD022E21A, VFD007E11C, VFD015E21C, VFD022E21C

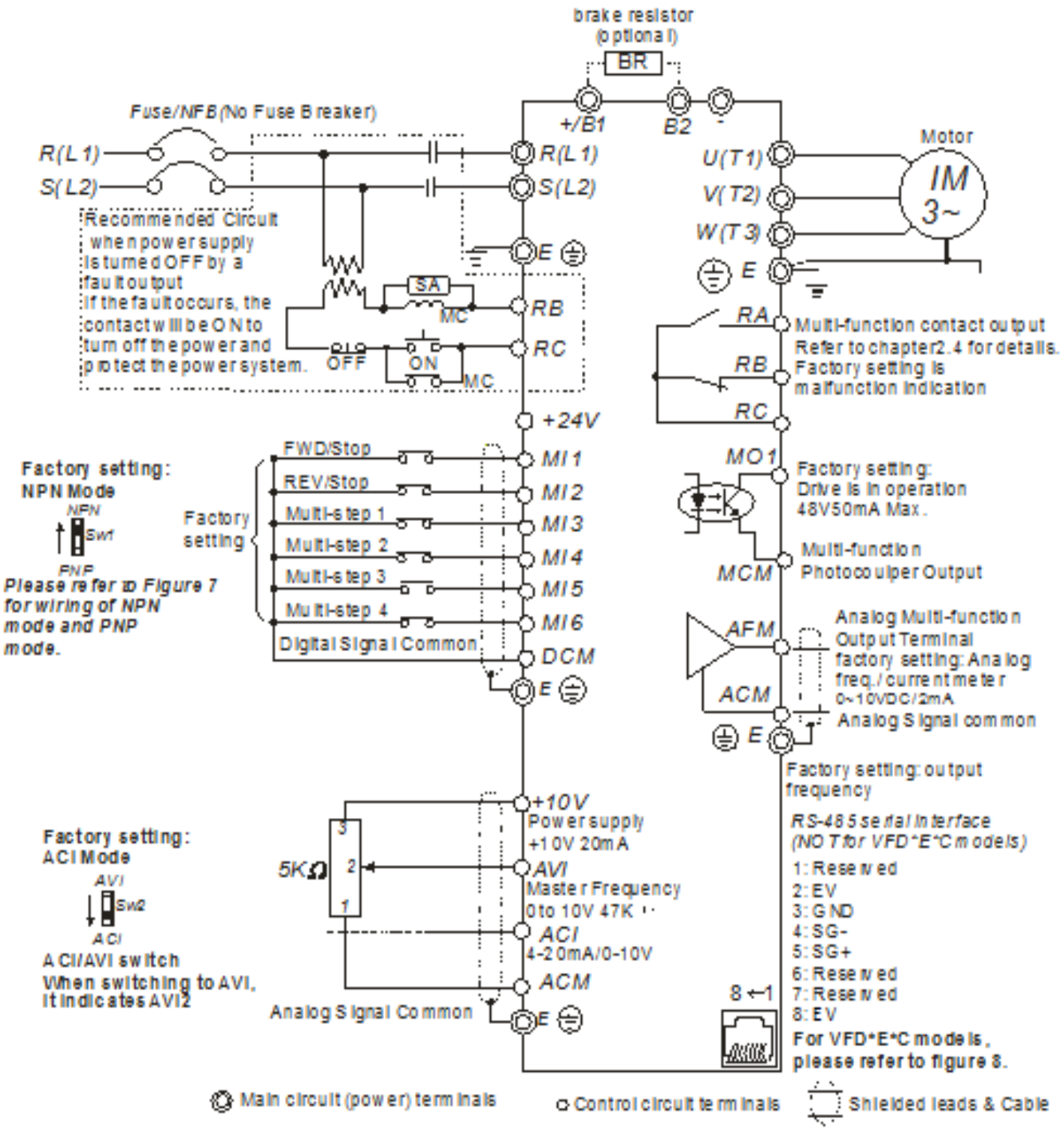

Figure 4 for models of VFD-E Series
VFD022E23A/43A, VFD037E23A/43A, VFD055E23A/43A, VFD075E23A/43A, VFD110E23A/43A, VFD022E23C/43C, VFD037E23C/43C, VFD055E23C/43C, VFD075E23C/43C, VFD110E23C/43C, VFD150E23A/23C, VFD150E43A/43C, VFD185E43A/43C, VFD220E43A/43C

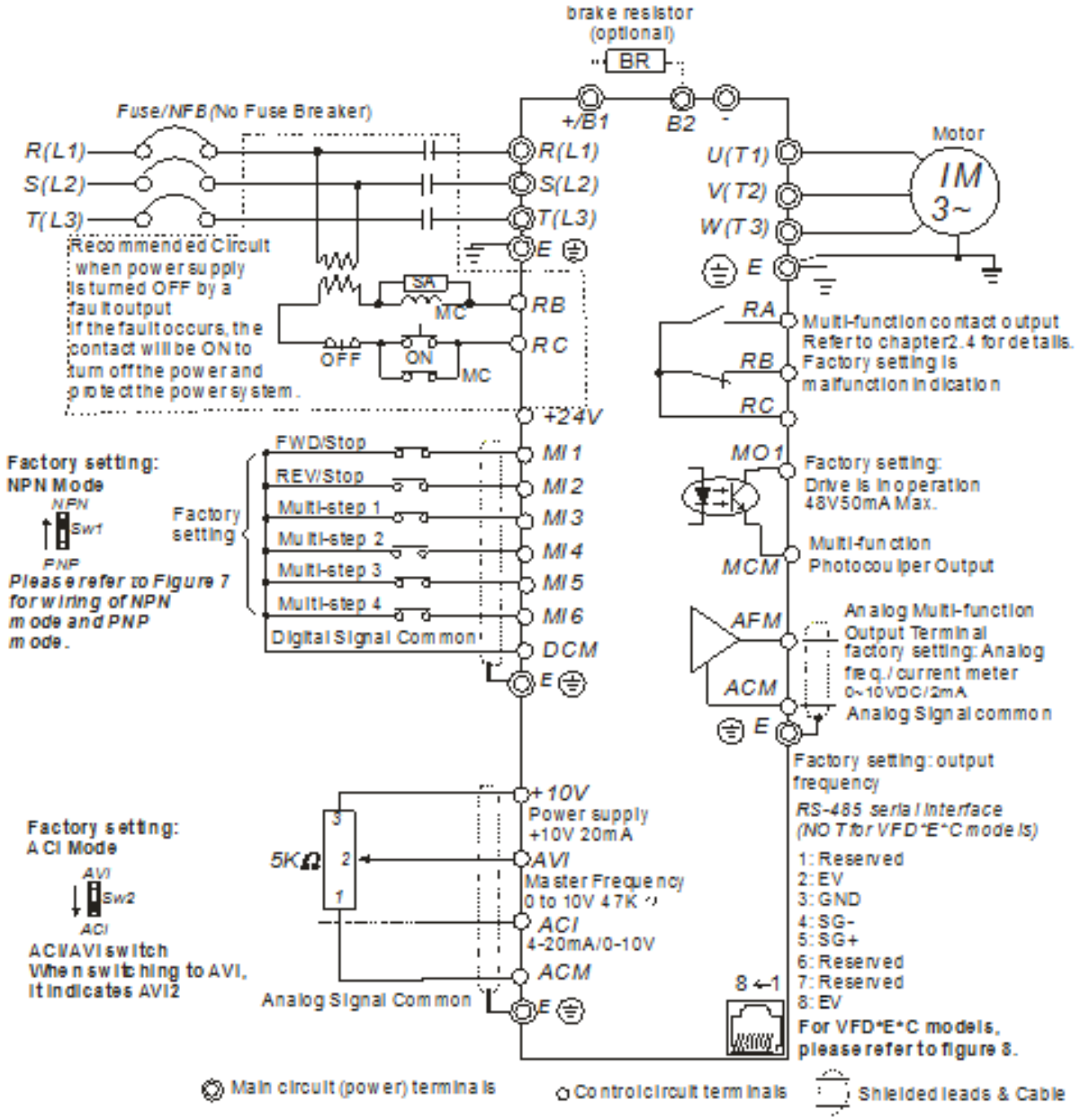

Figure 5 for models of VFD-E Series
VFD002E11T/21T, VFD004E11A/21T, VFD007E21T

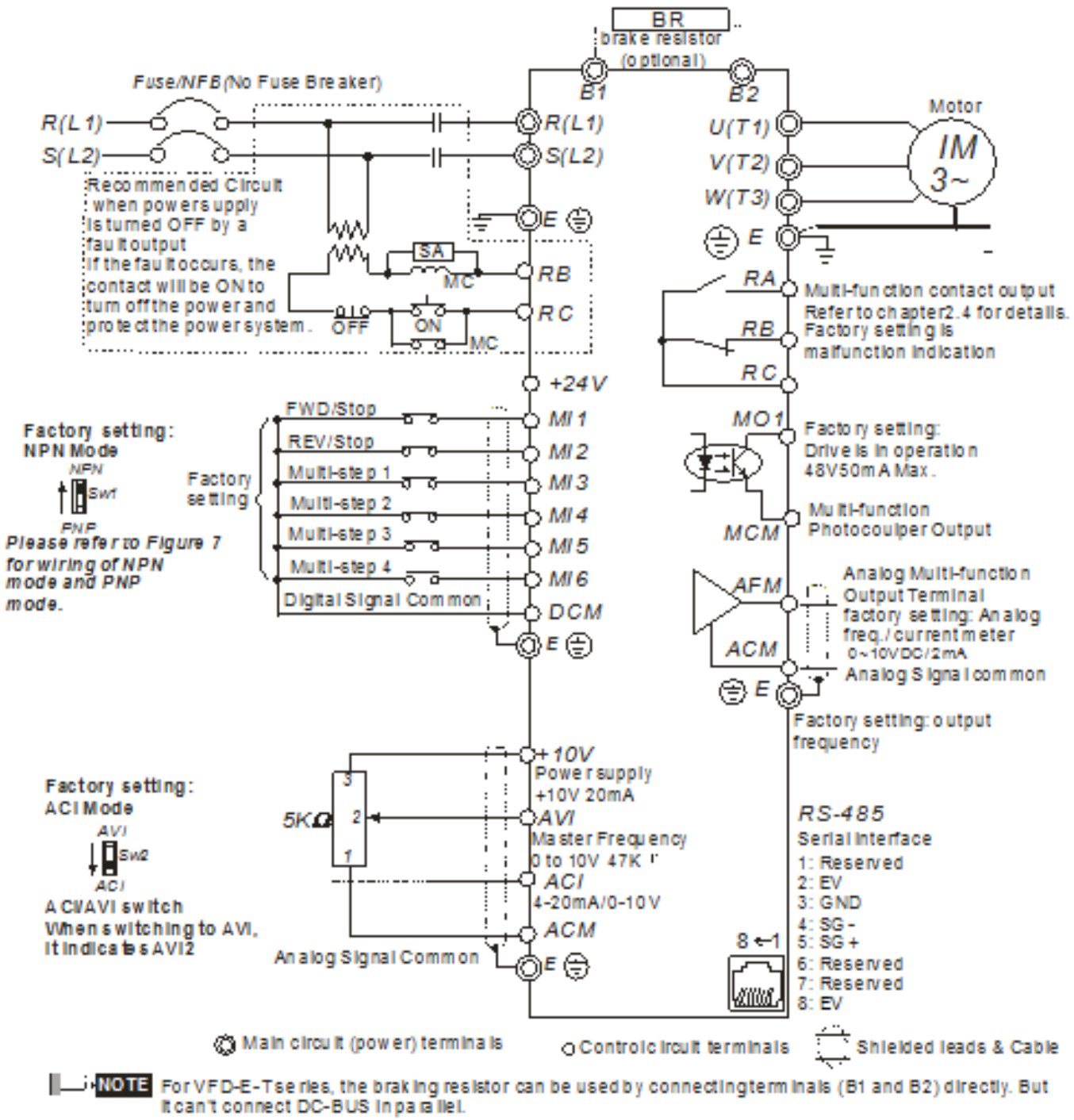


**NOTE** For VFD-E-Tseries, the braking resistor can be used by connecting terminals (B1 and B2) directly. But it can't connect DC-BUS in parallel.

Figure 6 for models of VFD-E Series
VFD002E23T, VFD004E23T/43T, VFD007E23T/43T, VFD015E23T/43T

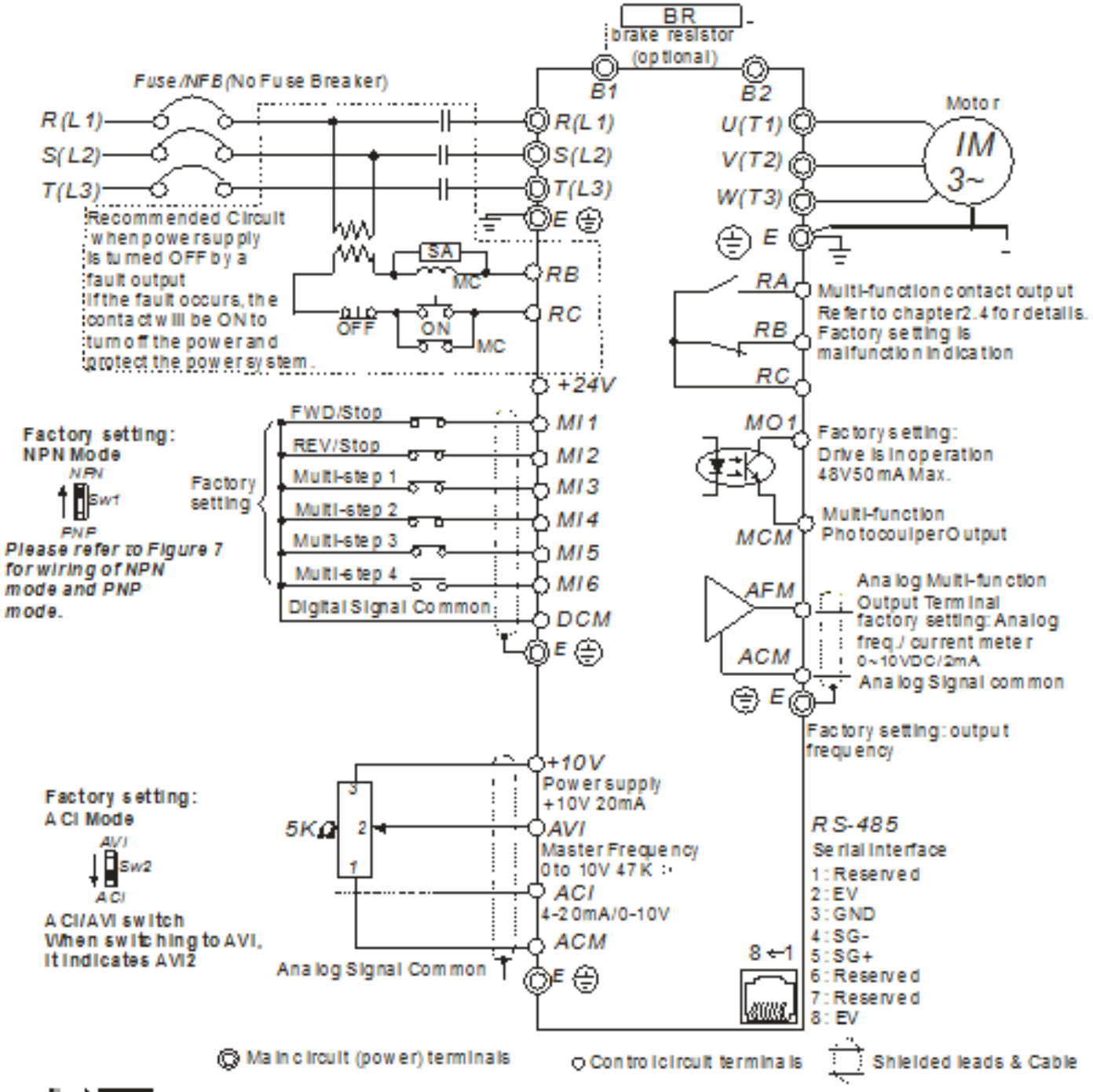


**NOTE** For VFD-E-T series, the braking resistor can be used by connecting terminals (B1 and B2) directly. But it can't connect DC-BUS in parallel.

Figure 7 Wiring for NPN mode and PNP mode

A. NPN mode without external power

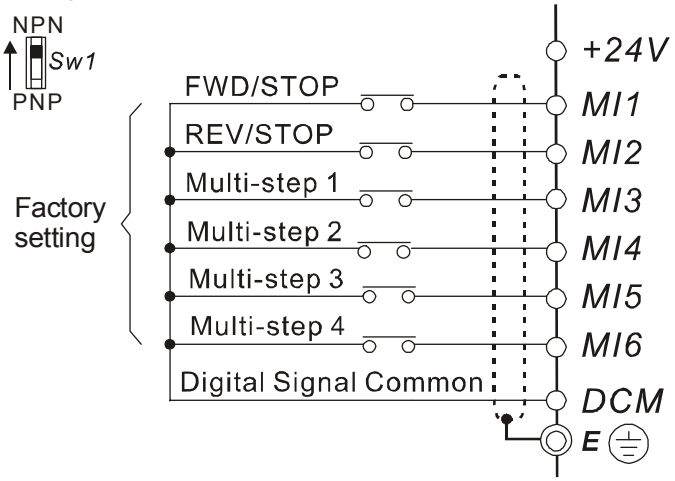


B. NPN mode with external power

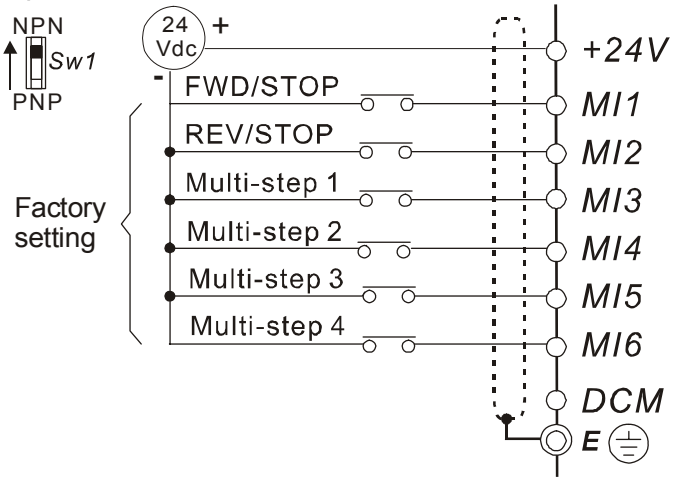


C. PNP mode without external power

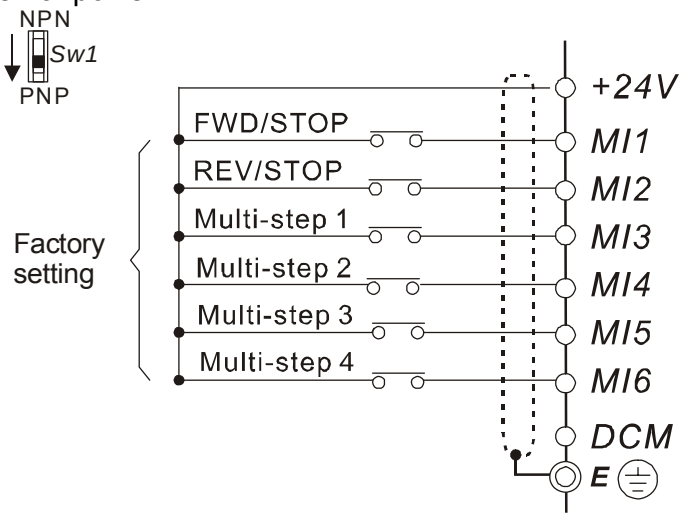

D. PNP mode with external power

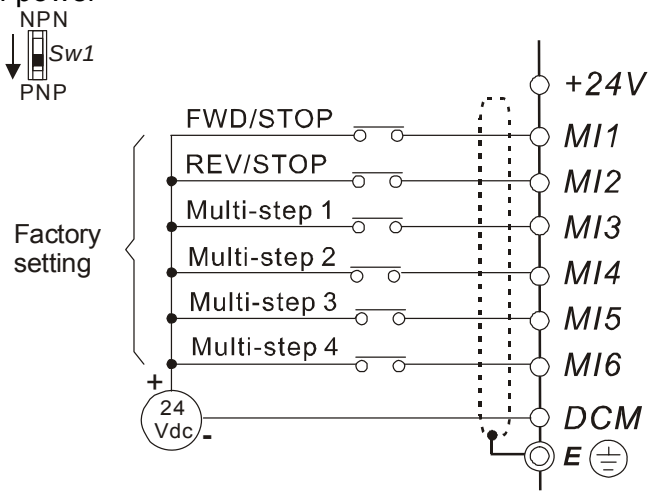


Figure 8 Pin definition for VFD*E*C CANopen models
(Note: CANopen models can't use PU06)

| PIN | Signal | Description |
|---|---|---|
| 1 | CAN_H | CAN_H bus line (dominant high) |
| 2 | CAN_L | CAN_L bus line (dominant low) |
| 3 | CAN_GND | Ground / 0V /V- |
| 4 | SG- | 485 communication |
| 5 | SG+ | 485 communication |
| 6 | GND | Ground |
| 7 | CAN_GND | Ground / 0V /V- |
| 8 | EV | Power |

**CAUTION!**

1. The wiring of main circuit and control circuit should be separated to prevent erroneous actions.
2. Please use shield wire for the control wiring and not to expose the peeled-off net in front of the terminal.
3. Please use the shield wire or tube for the power wiring and ground the two ends of the shield wire or tube.
4. Damaged insulation of wiring may cause personal injury or damage to circuits/equipment if it comes in contact with high voltage.

5. The AC motor drive, motor and wiring may cause interference. To prevent the equipment

damage, please take care of the erroneous actions of the surrounding sensors and the equipment.

6. When the AC drive output terminals U/T1, V/T2, and W/T3 are connected to the motor terminals U/T1, V/T2, and W/T3, respectively. To permanently reverse the direction of motor rotation, switch over any of the two motor leads.
7. With long motor cables, high capacitive switching current peaks can cause over-current, high leakage current or lower current readout accuracy. To prevent this, the motor cable should be less than 20m for 3.7kW models and below. And the cable should be less than 50m for 5.5kW models and above. For longer motor cables use an AC output reactor.
8. The AC motor drive, electric welding machine and the greater horsepower motor should be grounded separately.
9. Use ground leads that comply with local regulations and keep them as short as possible.
10. No brake resistor is built in the VFD-E series, it can install brake resistor for those occasions that use higher load inertia or frequent start/stop. Refer to Appendix B for details.

11. Multiple VFD-E units can be installed in one location. All the units should be grounded directly to a common ground terminal, as shown in the figure below. **Ensure there are no ground loops.**

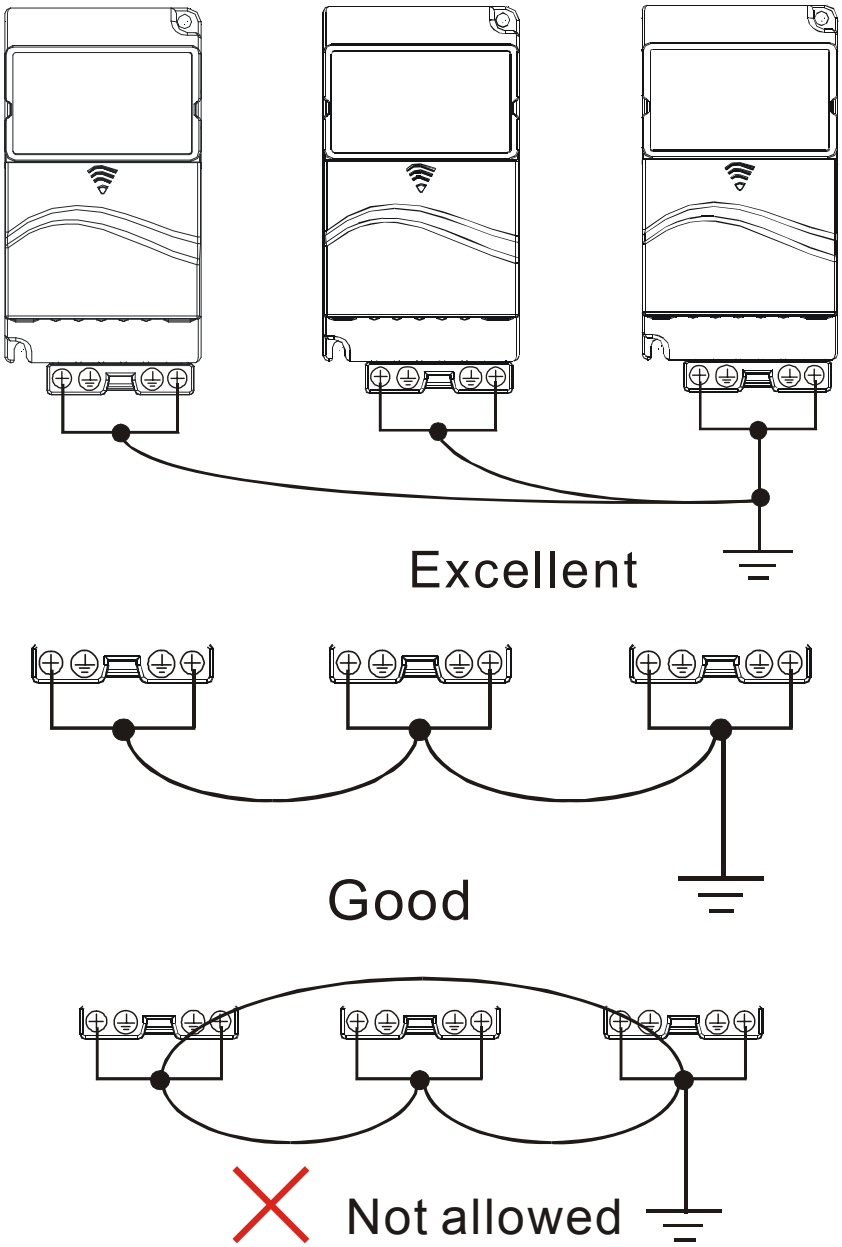

## 2.2 External Wiring

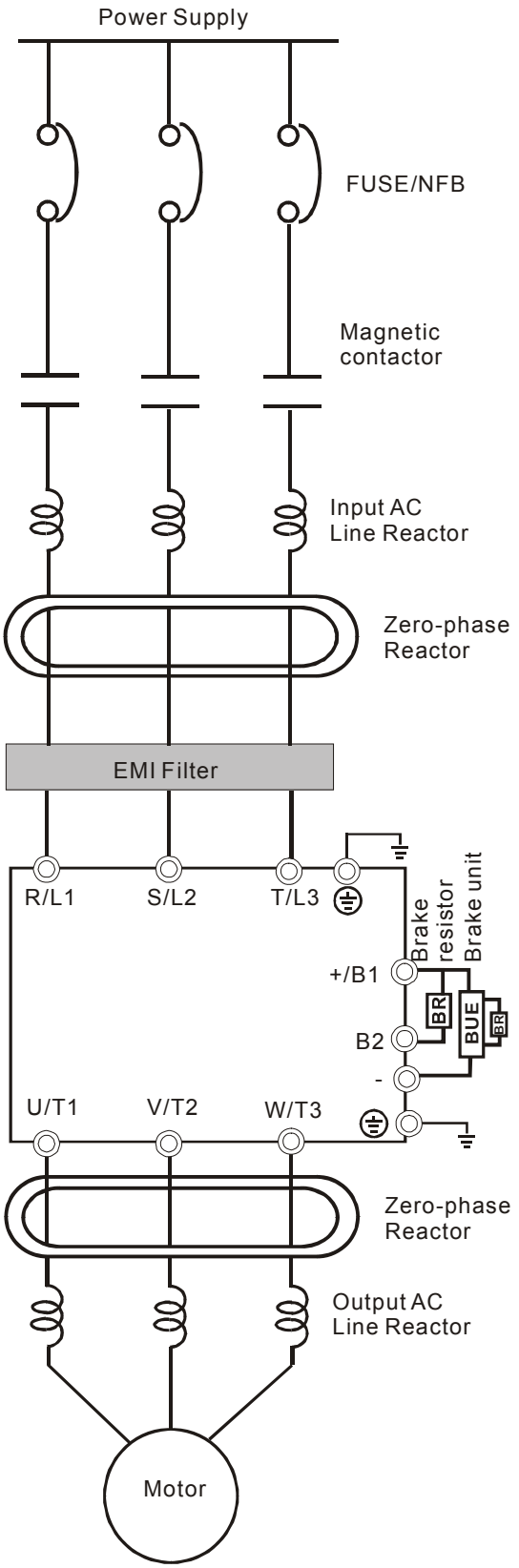


| Items | Explanations |
|---|---|
| Power supply | Please follow the specific power supply requirements shown in Appendix A. |
| Fuse/NFB (Optional) | There may be an inrush current during power up. Please check the chart of Appendix B and select the correct fuse with rated current. Use of an NFB is optional. |
| Magnetic contactor (Optional) | Please do not use a Magnetic contactor as the I/O switch of the AC motor drive, as it will reduce the operating life cycle of the AC drive. |
| Input AC Line Reactor (Optional) | Used to improve the input power factor, to reduce harmonics and provide protection from AC line disturbances, (surges, switching spikes, short interruptions, etc.). AC line reactor should be installed when the power supply capacity is 500kVA or more or advanced capacity is activated .The wiring distance should be ≤ 10m. Refer to appendix B for details. |
| Zero-phase Reactor (Ferrite Core Common Choke) (Optional) | Zero phase reactors are used to reduce radio noise especially when audio equipment is installed near the inverter. Effective for noise reduction on both the input and output sides. Attenuation quality is good for a wide range from AM band to 10MHz. Appendix B specifies the zero phase reactor. (RF220X00A) |
| EMI filter | To reduce electromagnetic interference. |
| Brake resistor and Brake unit (Optional) | Used to reduce the deceleration time of the motor. Please refer to the chart in Appendix B for specific Brake resistors. |
| Output AC Line Reactor (Optional) | Motor surge voltage amplitude depends on motor cable length. For applications with long motor cable (>20m), it is necessary to install a reactor at the inverter output side. |

# 2.3 Main Circuit

## 2.3.1 Main Circuit Connection

Figure 1
For frame A: VFD002E11A/21A/23A, VFD004E11A/21A/23A/43A, VFD007E21A/23A/43A, VFD002E11C/21C/23C, VFD004E11C/21C/23C/43C, VFD007E21C/23C/43C, VFD002E11P/21P/23P, VFD004E11P/21P/23P/43P, VFD007E21P, VFD015E23A/43A /23P /43P

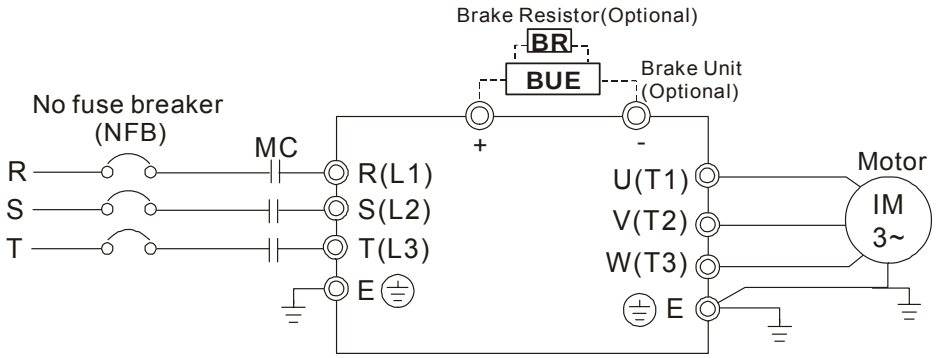


Figure 2
For frame B: VFD007E11A, VFD015E21A, VFD022E21A/23A/43A, VFD037E23A/43A, VFD007E11C, VFD015E21C, VFD022E21C/23C/43C, VFD037E23C/43C

For frame C: VFD055E23A/43A, VFD075E23A/43A, VFD110E23A/43A, VFD055E23C/43C, VFD075E23C/43C, VFD110E23C/43C
For frame D: VFD150E23A/23C, VFD150E43A/43C, VFD185E43A/43C, VFD220E43A/43C

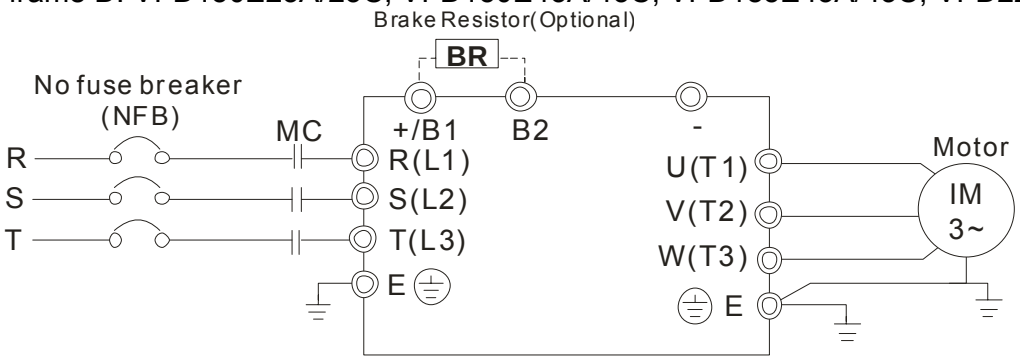


Figure 3
For Frame A: VFD002E11T/21T/23T, VFD004E11T/21T/23T/43T, VFD007E21T/23T/43T, VFD015E23T/43T

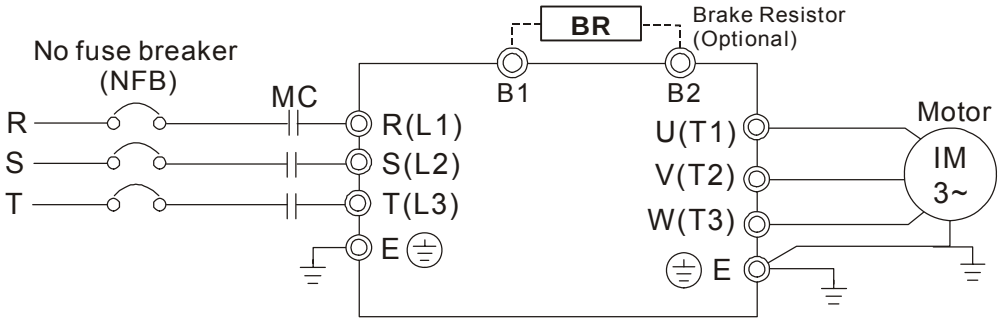

| Terminal Symbol | Explanation of Terminal Function |
|---|---|
| R/L1, S/L2, T/L3 | AC line input terminals (1-phase/3-phase) |
| U/T1, V/T2, W/T3 | AC drive output terminals for connecting 3-phase induction motor |
| +/B1~ B2 | Connections for Brake resistor (optional) |
| +/B1, - | Connections for External Brake unit (BUE series) |
| ⏚ | Earth connection, please comply with local regulations. |

**CAUTION!**

**Mains power terminals (R/L1, S/L2, T/L3)**

- Connect these terminals (R/L1, S/L2, T/L3) via a no-fuse breaker or earth leakage breaker to 3-phase AC power (some models to 1-phase AC power) for circuit protection. It is unnecessary to consider phase-sequence.
- It is recommended to add a magnetic contactor (MC) in the power input wiring to cut off power quickly and reduce malfunction when activating the protection function of AC motor drives. Both ends of the MC should have an R-C surge absorber.
- Please make sure to fasten the screw of the main circuit terminals to prevent sparks which is made by the loose screws due to vibration.
- Please use voltage and current within the regulation shown in Appendix A.
- When using a general GFCI (Ground Fault Circuit Interrupter), select a current sensor with sensitivity of 200mA or above, and not less than 0.1-second operation time to avoid nuisance tripping. For the specific GFCI of the AC motor drive, please select a current sensor with sensitivity of 30mA or above.
- Do NOT run/stop AC motor drives by turning the power ON/OFF. Run/stop AC motor drives by RUN/STOP command via control terminals or keypad. If you still need to run/stop AC drives by turning power ON/OFF, it is recommended to do so only ONCE per hour.
- Do NOT connect 3-phase models to a 1-phase power source.

**Output terminals for main circuit (U, V, W)**

- The factory setting of the operation direction is forward running. The methods to control the operation direction are: method 1, set by the communication parameters. Please refer to the group 9 for details. Method2, control by the optional keypad KPE-LE02. Refer to Appendix B for details.
- When it needs to install the filter at the output side of terminals U/T1, V/T2, W/T3 on the AC motor drive. Please use inductance filter. Do not use phase-compensation capacitors or L-C (Inductance-Capacitance) or R-C (Resistance-Capacitance), unless approved by Delta.
- DO NOT connect phase-compensation capacitors or surge absorbers at the output terminals of AC motor drives.
- Use well-insulated motor, suitable for inverter operation.

**Terminals [+/B1, B2] for connecting brake resistor**

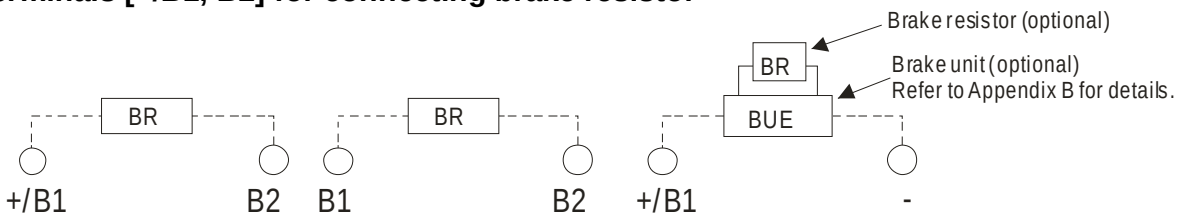


- Connect a brake resistor or brake unit in applications with frequent deceleration ramps, short deceleration time, too low brake torque or requiring increased brake torque.
- If the AC motor drive has a built-in brake chopper (frame B, frame C and VFDxxxExxT models), connect the external brake resistor to the terminals [+/B1, B2] or [B1, B2].
- Models of frame A don't have a built-in brake chopper. Please connect an external optional brake unit (BUE-series) and brake resistor. Refer to BUE series user manual for details.
- Connect the terminals [+(P), -(N)] of the brake unit to the AC motor drive terminals [+/B1, -]. The length of wiring should be less than 5m with cable.
- When not used, please leave the terminals [+/B1, -] open.

**WARNING!**

Short-circuiting [B2] or [-] to [+/B1] can damage the AC motor drive.

## 2.3.2 Main Circuit Terminals

Frame A

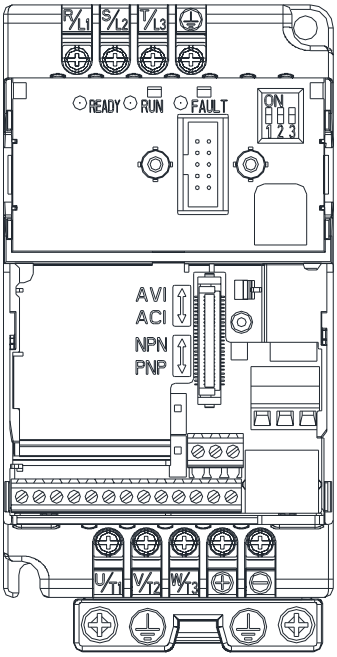


Main circuit terminals:

R/L1, S/L2, T/L3, U/T1, V/T2, W/T3, ⏚, +, -

| Models | Wire | Torque | Wire Type |
|---|---|---|---|
| VFD002E11A/11C/11T/11P;<br>VFD002E21A/21C/21T/21P;<br>VFD002E23A/23C/23T/23P;<br>VFD004E11A/11C/11T/11P;<br>VFD004E21A/21C/21T/21P;<br>VFD004E23A/23C/23T/23P;<br>VFD004E43A/43C/43T/43P;<br>VFD007E21A/21C/21T/21P;<br>VFD007E23A/23C/23T/23P;<br>VFD007E43A/43C/43T/43P;<br>VFD015E23A/23C/23T/23P;<br>VFD015E43A/43C/43T/43P; | 14 AWG.<br>(2.1mm$^2$) | 14kgf-cm<br>(12in-lbf) | Stranded copper only<br>600V, 75℃ or above |

Recommend round terminal spec(UL recognized)

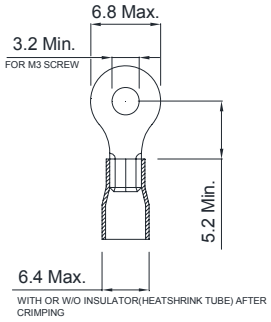


Frame B

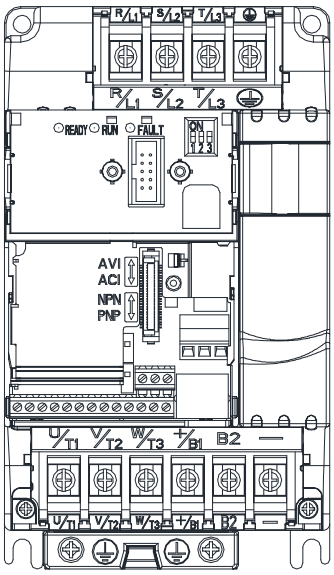


Main circuit terminals:

R/L1, S/L2, T/L3, U/T1, V/T2, W/T3, ⏚, +/B1, B2, -

| Models | Wire (Min.) | Wire (Max.) | Torque | Wire Type |
|---|---|---|---|---|
| VFD007E11A/11C | 10 AWG (5.3mm$^2$) | 10 AWG<br>(5.3mm$^2$) | 18kgf-cm<br>(15.6in-lbf) | Stranded copper only<br>600V , 75℃<br>or above |
| VFD015E21A/21C | 12 AWG (3.3mm$^2$) | | | |
| VFD022E21A/21C | 10 AWG (5.3mm$^2$) | | | |
| VFD022E23A/23C | 12 AWG (3.3mm$^2$) | | | |
| VFD022E43A/43C | 14 AWG. (2.1mm$^2$) | | | |
| VFD037E23A/23C | 10 AWG (5.3mm$^2$) | | | |
| VFD037E43A/43C | 14 AWG. (2.1mm$^2$) | | | |

Recommend round terminal spec (UL recognized)

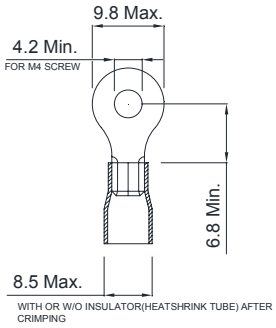

Frame C

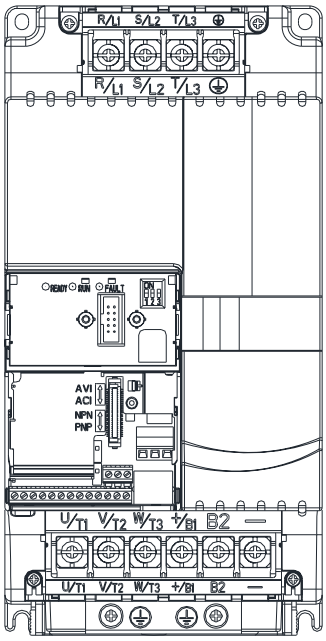


Main circuit terminals:

R/L1, S/L2, T/L3, U/T1, V/T2, W/T3, ⏚, +/B1, B2, -

| Models | Wire (Min.) | Wire (Max.) | Torque | Wire Type |
|---|---|---|---|---|
| VFD055E23A/23C | 8 AWG (8.4mm$^2$) | 6 AWG (13.3mm$^2$) | 30kgf-cm (26in-lbf) | Stranded copper only 600V , 75℃ or above |
| VFD075E23A/23C | 8 AWG (8.4mm$^2$) | | | |
| VFD110E23A/23C | 6 AWG (13.3mm$^2$) | | | |
| VFD055E43A/43C | 12 AWG (3.3mm$^2$) | | | |
| VFD075E43A/43C | 10 AWG (5.3mm$^2$) | | | |
| VFD110E43A/43C | 8 AWG (8.4mm$^2$) | | | |

Recommend round terminal spec (UL recognized)

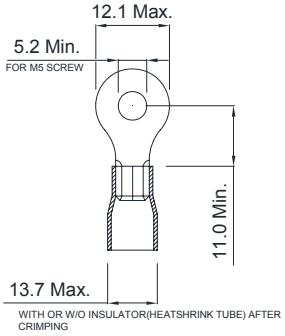


Frame D

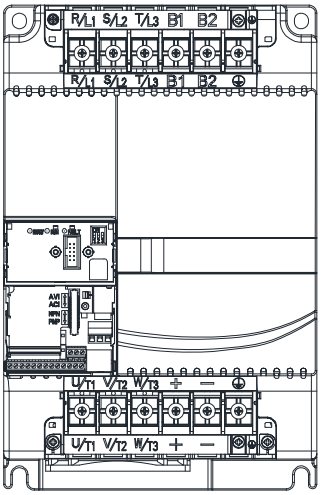


Main circuit terminals:

R/L1, S/L2, T/L3, U/T1, V/T2, W/T3, ⏚, B1, B2, +, -

| Models | Wire (Min.) | Wire (Max.) | Torque | Wire Type |
|---|---|---|---|---|
| VFD150E23A/23C | 4 AWG (21.2mm$^2$) | 4 AWG (21.2mm$^2$) | 57kgf-cm (49.5in-lbf) | Stranded copper only 600V , 75℃ or above |
| VFD150E43A43C | 8 AWG (8.4mm$^2$) | | | |
| VFD185E43A/43C | 6 AWG (13.3mm$^2$) | | | |
| VFD220E43A/43C | 6 AWG (13.3mm$^2$) | | | |

* VFD150E23A/23C need to select wire can withstand voltage 600V and temperature 90℃ above.

Recommend round terminal spec (UL recognized)

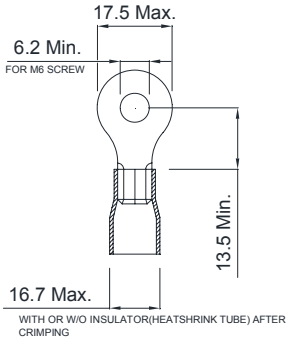

## 2.4 Control Terminals

Circuit diagram for digital inputs (NPN current 16mA.)

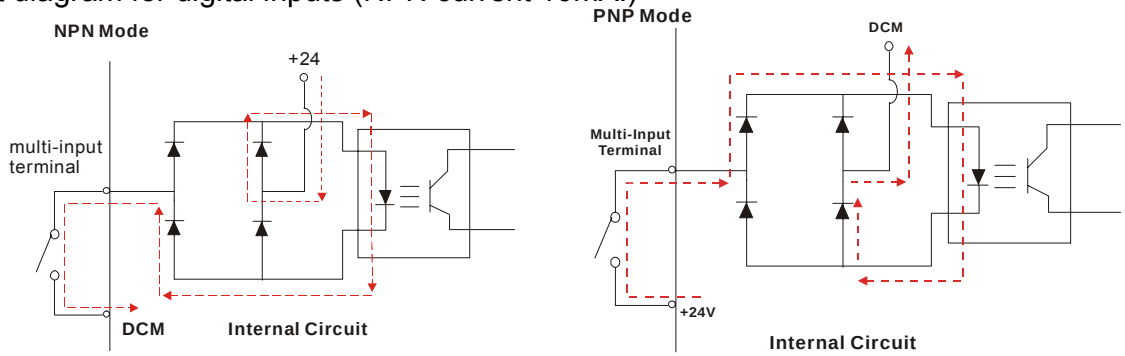


The position of the control terminals

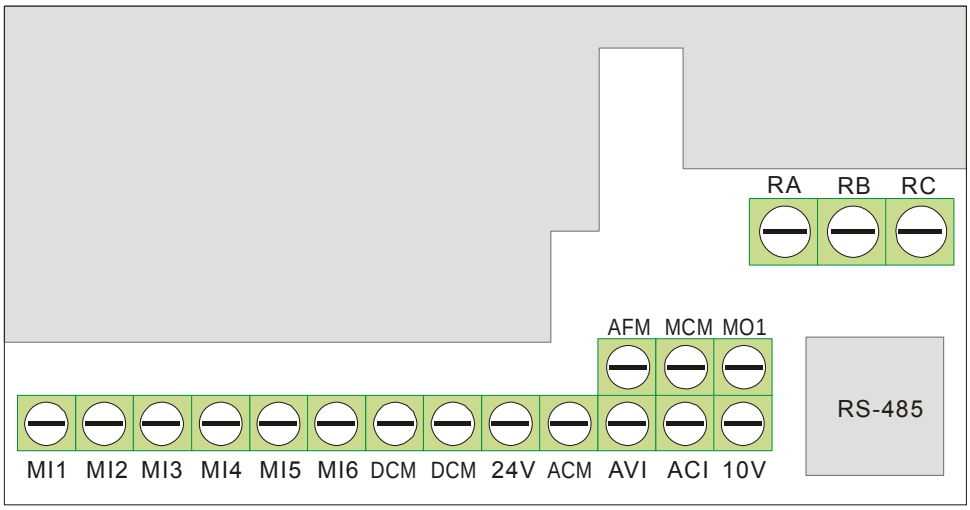


Terminal symbols and functions

| Terminal Symbol | Terminal Function | Factory Settings (NPN mode)<br>ON: Connect to DCM |
|---|---|---|
| MI1 | Forward-Stop command | ON: Run in MI1 direction<br>OFF: Stop acc. to Stop Method |
| MI2 | Reverse-Stop command | ON: Run in MI2 direction<br>OFF: Stop acc. to Stop Method |
| MI3 | Multi-function Input 3 | Refer to Pr.04.05 to Pr.04.08 for programming the Multi-function Inputs.<br>ON: the activation current is 6mA.<br>OFF: leakage current tolerance is 10 $\mu$ A. |
| MI4 | Multi-function Input 4 | |
| MI5 | Multi-function Input 5 | |
| MI6 | Multi-function Input 6 | |
| +24V | DC Voltage Source | +24VDC, 120mA used for PNP mode. |
| DCM | Digital Signal Common | Common for digital inputs and used for NPN mode. |

| Terminal Symbol | Terminal Function | Factory Settings (NPN mode)<br>ON: Connect to DCM |
|---|---|---|
| RA | Multi-function Relay output (N.O.) a | Resistive Load:<br>5A(N.O.)/3A(N.C.) 240VAC<br>5A(N.O.)/3A(N.C.) 24VDC<br>Inductive Load:<br>1.5A(N.O.)/0.5A(N.C.) 240VAC<br>1.5A(N.O.)/0.5A(N.C.) 24VDC<br>Refer to Pr.03.00 for programming |
| RB | Multi-function Relay output (N.C.) b | |
| RC | Multi-function Relay common | |
| MO1 | Multi-function Output 1 (Photocoupler) | Maximum 48VDC, 50mA<br>Refer to Pr.03.01 for programming<br> 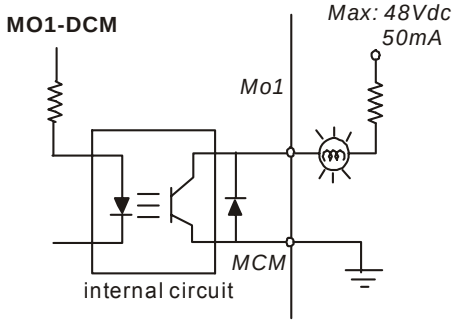 |
| MCM | Multi-function output common | Common for Multi-function Outputs |
| +10V | Potentiometer power supply | +10VDC 3mA |
| AVI | Analog voltage Input<br> 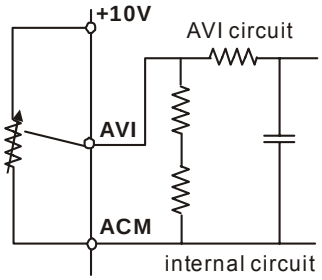 | Impedance: 47kΩ<br>Resolution: 10 bits<br>Range: 0 ~ 10VDC =<br>0 ~ Max. Output Frequency (Pr.01.00)<br>Selection: Pr.02.00, Pr.02.09, Pr.10.00<br>Set-up: Pr.04.11 ~ Pr.04.14, 04.19~04.23 |
| ACM | Analog control signal (common) | Common for AVI, ACI, AFM |
| ACI | Analog current Input<br> 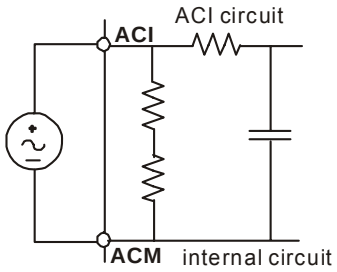 | Impedance: 250Ω/100kΩ<br>Resolution: 10 bits<br>Range: 4 ~ 20mA =<br>0 ~ Max. Output Frequency (Pr.01.00)<br>Selection: Pr.02.00, Pr.02.09, Pr.10.00<br>Set-up: Pr.04.15 ~ Pr.04.18 |

| Terminal Symbol | Terminal Function | Factory Settings (NPN mode)<br>ON: Connect to DCM |
|---|---|---|
| AFM | Analog output meter<br> 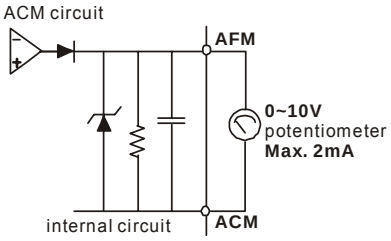 <br> | 0 to 10V, 2mA<br>Impedance: 100kΩ<br>Output current 2mA max<br>Resolution: 8 bits<br>Range: 0 ~ 10VDC<br>Function: Pr.03.03 to Pr.03.04 |

NOTE: Control signal wiring size: 18 AWG (0.75 $mm^2$) with shielded wire.

**Analog inputs (AVI, ACI, ACM)**

- Analog input signals are easily affected by external noise. Use shielded wiring and keep it as short as possible (<20m) with proper grounding. If the noise is inductive, connecting the shield to terminal ACM can bring improvement.
- If the analog input signals are affected by noise from the AC motor drive, please connect a capacitor (0.1 $\mu$F and above) and ferrite core as indicated in the following diagrams:

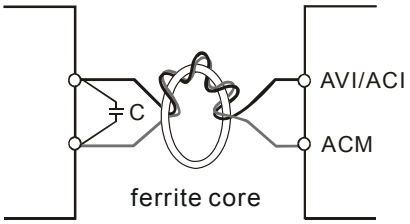


**wind each wires 3 times or more around the core**

**Digital inputs (MI1~MI6, DCM)**

- When using contacts or switches to control the digital inputs, please use high quality components to avoid contact bounce.

**Digital outputs (MO1, MCM)**

- Make sure to connect the digital outputs to the right polarity, see wiring diagrams.
- When connecting a relay to the digital outputs, connect a surge absorber or fly-back diode across the coil and check the polarity.

**General**

- Keep control wiring as far away as possible from the power wiring and in separate conduits to avoid interference. If necessary let them cross only at 90º angle.
- The AC motor drive control wiring should be properly installed and not touch any live power wiring or terminals.

**DANGER!**

Damaged insulation of wiring may cause personal injury or damage to circuits/equipment if it comes in contact with high voltage.

***The specification for the control terminals***

The position of the control terminals

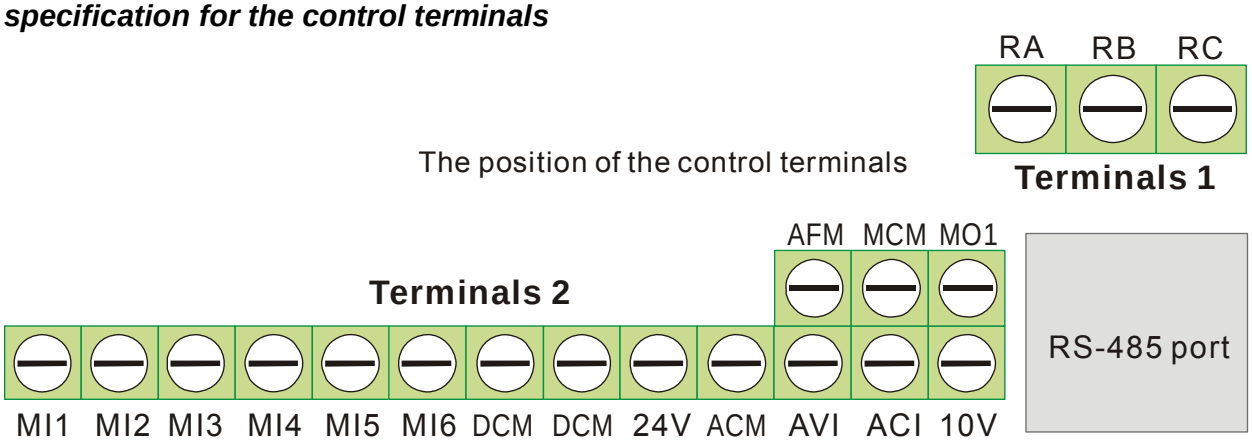


| Frame | Control Terminals | Torque | Wire |
|---|---|---|---|
| A, B, C, D | Terminals 1 | 5 kgf-cm (4.4 in-lbf) | 12-24 AWG (3.3-0.2mm$^2$) |
| | Terminals 2 | 2 kgf-cm (1.7 in-lbf) | 16-24 AWG (1.3-0.2mm$^2$) |

**NOTE**

**Frame A**：VFD002E11A/11C/11T/11P; VFD002E21A/21C/21T/21P; VFD002E23A/23C/23T/23P;VFD004E11A/11C/11T/11P; VFD004E21A/21C/21T/21P; VFD004E23A/23C/23T/23P; VFD004E43A/43C/43T/43P; VFD007E21A/21C/21T/21P; VFD007E23A/23C/23T/23P; VFD007E43A/43C/43T/43P VFD015E23A/23C/23T/23P; VFD015E43A/43C/43T/43P;

**Frame B**：VFD007E11A/11C, VFD015E21A/21C, VFD022E21A/21C, VFD022E23A/23C, VFD022E43A/43C, VFD037E23A/23C, VFD037E43A/43C,

**Frame C**：VFD055E23A/23C, VFD055E43A/43C, VFD075E23A/23C, VFD075E43A/43C, VFD110E23A/23C, VFD110E43A/43C,

**Frame D**：VFD150E23A/23C, VFD150E43A/43C, VFD185E43A/43C, VFD220E43A/4

# Chapter 3 Keypad and Start Up

| | |
|---|---|
| CAUTION | ■ Make sure that the wiring is correct. In particular, check that the output terminals U/T1, V/T2, W/T3. are NOT connected to power and that the drive is well grounded.<br>■ Verify that no other equipment is connected to the AC motor drive<br>■ Do NOT operate the AC motor drive with humid hands.<br>■ Please check if READY LED is ON when power is applied. Check if the connection is well when option from the digital keypad KPE-LE02. |
| WARNING | ■ It should be stopped when fault occurs during running and refer to “Fault Code Information and Maintenance” for solution. Please do NOT touch output terminals U, V, W when power is still applied to L1/R, L2/S, L3/T even when the AC motor drive has stopped. The DC-link capacitors may still be charged to hazardous voltage levels, even if the power has been turned off. |

## 3.1 Keypad

There are three LEDs on the keypad:

LED READY: It will light up after applying power. The light won’t be off until the capacitors are discharged to safe voltage levels after power off.

LED RUN: It will light up when the motor is running.

LED FAULT: It will light up when fault occurs.

## 3.2 Operation Method

The operation method can be set via communication, control terminals and optional keypad KPE-LE02.

A) Connect RS-485 communication port. Use a VFD-USB01 cable or an IFD8500 (IFD6500) communication module to connect your computer to this port.
B) Control terminals MI~ M6.
C) Keypad interface

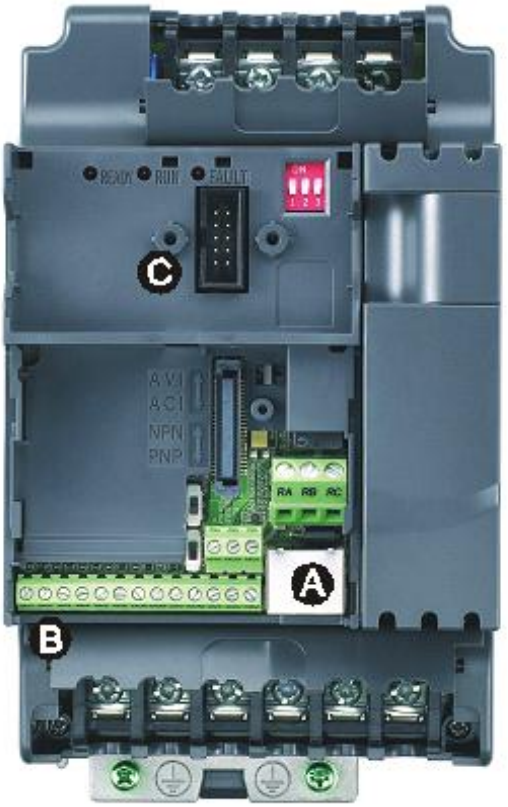

| Operation Method | Frequency Source | Operation Command Source |
|---|---|---|
| Operate from the communication | When setting communication by the PC, it needs to use VFD-USB01 or IFD8500 converter to connect to the PC.<br>Refer to the communication address 2000H and 2101H setting for details. | |
| Operate from external signal | 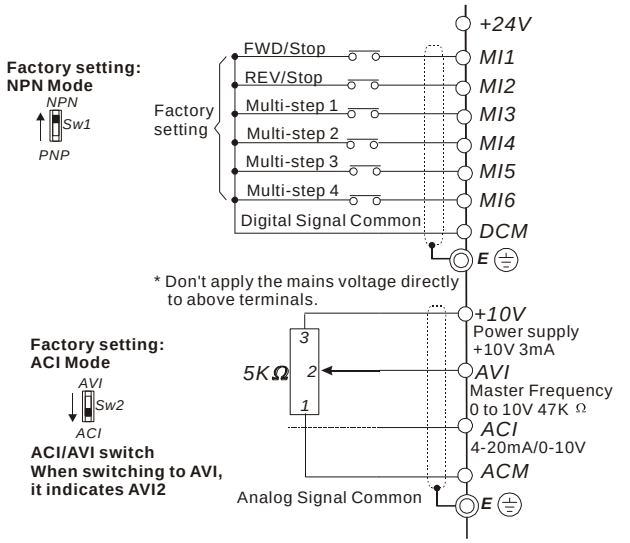 <br>Figure 3-1 | |
| | MI3-DCM (Set Pr.04.05=10)<br>MI4-DCM (Set Pr.04.06=11) | External terminals input:<br>MI1-DCM<br>MI2-DCM |
| Operate from the optional keypad (KPE-LE02) | ▲ ▼ | RUN STOP RESET |

## 3.3 Trial Run

The factory setting of the operation source is from the external terminal (Pr.02.01=2).

1. Both MI1-DCM and MI2-DCM need to connect a switch for switching FWD/STOP and REV/STOP.
2. Please connect a potentiometer among AVI, 10V and DCM or apply power 0-10Vdc to AVI-DCM (as shown in figure 3-1)

3. Setting the potentiometer or AVI-DCM 0-10Vdc power to less than 1V.
4. Setting MI1=On for forward running. And if you want to change to reverse running, you should set MI2=On. And if you want to decelerate to stop, please set MI1/MI2=Off.
5. Check following items:

- Check if the motor direction of rotation is correct.
- Check if the motor runs steadily without abnormal noise and vibration.
- Check if acceleration and deceleration are smooth.

If you want to perform a trial run by using optional digital keypad, please operate by the following steps.

1. Connect digital keypad to AC motor drive correctly.
2. After applying the power, verify that LED display shows F 0.0Hz.
3. Set Pr.02.00=0 and Pr.02.01=0. (Refer to Appendix B operation flow for detail)
4. Press ▼ key to set frequency to around 5Hz.
5. Press RUN key for forward running. And if you want to change to reverse running, you should press ▼ in Frd page. And if you want to decelerate to stop, please press STOP/RESET key.
6. Check following items:
   - Check if the motor direction of rotation is correct.
   - Check if the motor runs steadily without abnormal noise and vibration.
   - Check if acceleration and deceleration are smooth.

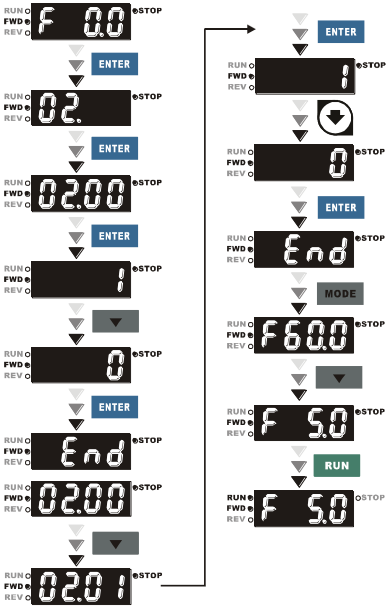


If the results of trial run are normal, please start the formal run.

# Chapter 4 Parameters

The VFD-E parameters are divided into 14 groups by property for easy setting. In most applications, the user can finish all parameter settings before start-up without the need for re-adjustment during operation.

The 14 groups are as follows:

Group 0: User Parameters
Group 1: Basic Parameters
Group 2: Operation Method Parameters
Group 3: Output Function Parameters
Group 4: Input Function Parameters
Group 5: Multi-Step Speed Parameters
Group 6: Protection Parameters
Group 7: Motor Parameters
Group 8: Special Parameters
Group 9: Communication Parameters
Group 10: PID Control Parameters
Group 11: Multi-function Input/ Output Parameters for Extension Card
Group 12: Analog Input/ Output Parameters for Extension Card
Group 13: PG function Parameters for Extension Card

## 4.1 Summary of Parameter Settings

✓: The parameter can be set during operation.

Group 0 User Parameters

| Parameter | Explanation | Settings | Factory Setting | Customer |
|---|---|---|---|---|
| 00.00 | Identity Code of the AC motor drive | Read-only | ## | |
| 00.01 | Rated Current Display of the AC motor drive | Read-only | #.# | |
| 00.02 | Parameter Reset | 0: Parameter can be read/written<br>1: All parameters are read only<br>6: Clear PLC program (NOT for VFD*E*C models)<br>8: keypad lock<br>9: All parameters are reset to factory settings (50Hz, 230V/400V or 220V/380V depends on Pr.00.12)<br>10: All parameters are reset to factory settings (60Hz, 220V/440V) | 0 | |
| ✓00.03 | Start-up Display Selection | 0: Display the frequency command value (Fxxx)<br>1: Display the actual output frequency (Hxxx)<br>2: Display the content of user-defined unit (Axxx)<br>3: Multifunction display, see Pr.00.04 (Uxxx)<br>4: FWD/REV command<br>5: PLCx (PLC selections: PLC0/PLC1/PLC2) (NOT for VFD*E*C models) | 0 | |
| ✓00.04 | Content of Multi-function Display | 0: Display the content of user-defined unit (Uxxx)<br>1: Display the counter value (c)<br>2: Display PLC D1043 value (C) (NOT for VFD*E*C models)<br>3: Display DC-BUS voltage (u) | 0 | |

| Parameter | Explanation | Settings | Factory Setting | Customer |
|---|---|---|---|---|
| | | 4: Display output voltage (E)<br>5: Display PID analog feedback signal value (b) (%)<br>6: Output power factor angle (n)<br>7: Display output power (P)<br>8: Display the estimated value of torque as it relates to current (t)<br>9: Display AVI (I) (V)<br>10: Display ACI / AVI2 (i) (mA/V)<br>11: Display the temperature of IGBT (h) (°C)<br>12: Display AVI3/ACI2 level (I.)<br>13: Display AVI4/ACI3 level (i.)<br>14: Display PG speed in RPM (G)<br>15: Display motor number (M)<br>16: Display F*Pr.00.05 | | |
| ✓00.05 | User-Defined Coefficient K | 0.1 to 160.0 | 1.0 | |
| 00.06 | Power Board Software Version | Read-only | #.## | |
| 00.07 | Control Board Software Version | Read-only | #.## | |
| 00.08 | Password Input | 0 to 9999<br>0 to 2: times of wrong password | 0 | |
| 00.09 | Password Set | 0 to 9999<br>0: No password set or successful input in Pr. 00.08<br>1: Password has been set | 0 | |
| 00.10 | Control Method | 0: V/f Control<br>1: Vector Control | 0 | |
| 00.11 | Reserved | | | |
| 00.12 | 50Hz Base Voltage Selection | 0: 230V/400V<br>1: 220V/380V | 0 | |

# Group 1 Basic Parameters

| Parameter | Explanation | Settings | Factory Setting | Customer |
|---|---|---|---|---|
| 01.00 | Maximum Output Frequency (Fmax) | 50.00 to 600.0 Hz<br>(Japanese version: 50.00 to 599.00 Hz ) | 60.00 | |
| 01.01 | Maximum Voltage Frequency (Fbase) (Motor 0) | 0.10 to 600.0 Hz (Japanese version: 0.10 to 599.00 Hz ) | 60.00 | |
| 01.02 | Maximum Output Voltage (Vmax) (Motor 0) | 115V/230V series: 0.1V to 255.0V<br>460V series: 0.1V to 510.0V | 220.0<br>440.0 | |
| 01.03 | Mid-Point Frequency (Fmid) (Motor 0) | 0.10 to 600.00 Hz<br>(Japanese version: 0.10 to 599.00 Hz ) | 1.50 | |
| 01.04 | Mid-Point Voltage (Vmid) (Motor 0) | 115V/230V series: 0.1V to 255.0V<br>460V series: 0.1V to 510.0V | 10.0<br>20.0 | |
| 01.05 | Minimum Output Frequency (Fmin) (Motor 0) | 0.10 to 600.00 Hz<br>(Japanese version: 0.10 to 599.00 Hz ) | 1.50 | |
| 01.06 | Minimum Output Voltage (Vmin) (Motor 0) | 115V/230V series: 0.1V to 255.0V<br>460V series: 0.1V to 510.0V | 10.0<br>20.0 | |
| 01.07 | Output Frequency Upper Limit | 0.1 to 120.0% | 110.0 | |
| 01.08 | Output Frequency Lower Limit | 0.0 to100.0 % | 0.0 | |
| ⚡01.09 | Accel Time 1 | 0.1 to 600.0 / 0.01 to 600.0 sec | 10.0 | |
| ⚡01.10 | Decel Time 1 | 0.1 to 600.0 / 0.01 to 600.0 sec | 10.0 | |
| ⚡01.11 | Accel Time 2 | 0.1 to 600.0 / 0.01 to 600.0 sec | 10.0 | |
| ⚡01.12 | Decel Time 2 | 0.1 to 600.0 / 0.01 to 600.0 sec | 10.0 | |
| ⚡01.13 | Jog Acceleration Time | 0.1 to 600.0 / 0.01 to 600.0 sec | 1.0 | |
| ⚡01.14 | Jog Deceleration Time | 0.1 to 600.0 / 0.01 to 600.0 sec | 1.0 | |
| ⚡01.15 | Jog Frequency | 0.10 Hz to 600.00 Hz<br>(Japanese version: 0.10 to 599.00 Hz ) | 6.00 | |

| Parameter | Explanation | Settings | Factory Setting | Customer |
|---|---|---|---|---|
| 01.16 | Auto acceleration / deceleration (refer to Accel/Decel time setting) | 0: Linear Accel/Decel<br>1: Auto Accel, Linear Decel<br>2: Linear Accel, Auto Decel<br>3: Auto Accel/Decel (Set by load)<br>4: Auto Accel/Decel (set by Accel/Decel Time setting) | 0 | |
| 01.16 | Auto acceleration / deceleration (refer to Accel/Decel time setting) | 5: Linear Accel. controlled by current, linear Decel.<br>6: Linear Accel. controlled by current, auto Decel. | 0 | |
| 01.17 | Acceleration S-Curve | 0.0 to 10.0 / 0.00 to 10.00 sec | 0.0 | |
| 01.18 | Deceleration S-Curve | 0.0 to 10.0 / 0.00 to 10.00 sec | 0.0 | |
| 01.19 | Accel/Decel Time Unit | 0: Unit: 0.1 sec<br>1: Unit: 0.01 sec | 0 | |
| 01.20 | Delay Time at 0Hz for Simple Position | 0.00 to 600.00 sec | 0.00 | |
| 01.21 | Delay Time at 10Hz for Simple Position | 0.00 to 600.00 sec | 0.00 | |
| 01.22 | Delay Time at 20Hz for Simple Position | 0.00 to 600.00 sec | 0.00 | |
| 01.23 | Delay Time at 30Hz for Simple Position | 0.00 to 600.00 sec | 0.00 | |
| 01.24 | Delay Time at 40Hz for Simple Position | 0.00 to 600.00 sec | 0.00 | |
| 01.25 | Delay Time at 50Hz for Simple Position | 0.00 to 600.00 sec | 0.00 | |
| 01.26 | Maximum Voltage Frequency (Fbase) (Motor 1) | 0.10 to 600.0 Hz<br>(Japanese version: 0.10 to 599.00 Hz ) | 60.00 | |
| 01.27 | Maximum Output Voltage (Vmax) (Motor 1) | 115V/230V series: 0.1V to 255.0V<br>460V series: 0.1V to 510.0V | 220.0<br>440.0 | |
| 01.28 | Mid-Point Frequency (Fmid) (Motor 1) | 0.10 to 600.00 Hz<br>(Japanese version: 0.10 to 599.00 Hz ) | 1.50 | |
| 01.29 | Mid-Point Voltage (Vmid) (Motor 1) | 115V/230V series: 0.1V to 255.0V<br>460V series: 0.1V to 510.0V | 10.0<br>20.0 | |
| 01.30 | Minimum Output Frequency (Fmin) (Motor 1) | 0.10 to 600.00 Hz<br>(Japanese version: 0.10 to 599.00 Hz ) | 1.50 | |
| 01.31 | Minimum Output Voltage (Vmin) (Motor 1) | 115V/230V series: 0.1V to 255.0V<br>460V series: 0.1V to 510.0V | 10.0<br>20.0 | |

| Parameter | Explanation | Settings | Factory Setting | Customer |
|---|---|---|---|---|
| 01.32 | Maximum Voltage Frequency (Fbase) (Motor 2) | 0.10 to 600.0 Hz<br>(Japanese version: 0.10 to 599.00 Hz ) | 60.00 | |
| 01.33 | Maximum Output Voltage (Vmax) (Motor 2) | 115V/230V series: 0.1V to 255.0V<br>460V series: 0.1V to 510.0V | 220.0<br>440.0 | |
| 01.34 | Mid-Point Frequency (Fmid) (Motor 2) | 0.10 to 600.00 Hz<br>(Japanese version: 0.10 to 599.00 Hz ) | 1.50 | |
| 01.35 | Mid-Point Voltage (Vmid) (Motor 2) | 115V/230V series: 0.1V to 255.0V<br>460V series: 0.1V to 510.0V | 10.0<br>20.0 | |
| 01.36 | Minimum Output Frequency (Fmin) (Motor 2) | 0.10 to 600.00 Hz<br>(Japanese version: 0.10 to 599.00 Hz ) | 1.50 | |
| 01.37 | Minimum Output Voltage (Vmin) (Motor 2) | 115V/230V series: 0.1V to 255.0V<br>460V series: 0.1V to 510.0V | 10.0<br>20.0 | |
| 01.38 | Maximum Voltage Frequency (Fbase) (Motor 3) | 0.10 to 600.0 Hz | 60.00 | |
| 01.39 | Maximum Output Voltage (Vmax) (Motor 3) | 115V/230V series: 0.1V to 255.0V<br>460V series: 0.1V to 510.0V | 220.0<br>440.0 | |
| 01.40 | Mid-Point Frequency (Fmid) (Motor 3) | 0.10 to 600.00 Hz<br>(Japanese version: 0.10 to 599.00 Hz ) | 1.50 | |
| 01.41 | Mid-Point Voltage (Vmid) (Motor 3) | 115V/230V series: 0.1V to 255.0V<br>460V series: 0.1V to 510.0V | 10.0<br>20.0 | |
| 01.42 | Minimum Output Frequency (Fmin) (Motor 3) | 0.10 to 600.00 Hz<br>(Japanese version: 0.10 to 599.00 Hz ) | 1.50 | |
| 01.43 | Minimum Output Voltage (Vmin) (Motor 3) | 115V/230V series: 0.1V to 255.0V<br>460V series: 0.1V to 510.0V | 10.0<br>20.0 | |

# Group 2 Operation Method Parameters

| Parameter | Explanation | Settings | Factory Setting | Customer |
|---|---|---|---|---|
| ✓02.00 | Source of First Master Frequency Command | 0: Digital keypad UP/DOWN keys or Multi-function Inputs UP/DOWN. Last used frequency saved.<br>1: 0 to +10V from AVI<br>2: 4 to 20mA from ACI or 0 to +10V from AVI2<br>3: RS-485 (RJ-45)/USB communication<br>4: Digital keypad potentiometer | 1 | |
| ✓02.01 | Source of First Operation Command | 0: Digital keypad<br>1: External terminals. Keypad STOP/RESET enabled.<br>2: External terminals. Keypad STOP/RESET disabled.<br>3: RS-485 (RJ-45)/USB communication. Keypad STOP/RESET enabled.<br>4: RS-485 (RJ-45)/USB communication. Keypad STOP/RESET disabled. | 1 | |
| 02.02 | Stop Method | 0: STOP: ramp to stop; E.F.: coast to stop<br>1: STOP: coast to stop; E.F.: coast to stop<br>2: STOP: ramp to stop; E.F.: ramp to stop<br>3: STOP: coast to stop; E.F.: ramp to stop | 0 | |
| 02.03 | PWM Carrier Frequency Selections | 1 to 15kHz | 8 | |
| 02.04 | Motor Direction Control | 0: Enable forward/reverse operation<br>1: Disable reverse operation<br>2: Disabled forward operation | 0 | |

| Parameter | Explanation | Settings | Factory Setting | Customer |
|---|---|---|---|---|
| 02.05 | The source of Power-On command and Running command modifies the operating control of the VFD. | 0: Start running when Power is on.<br>1: Don't run when Power is on<br>2: When the source of the command changes, VFD's operation remains the same.<br>3: When the source of the command changes, VFD's operation follows the new command.<br>4: The motor drive can start to run at power on or after reset. When the source of command is a 2-wire external terminal, the operating command changes as the external terminal's status changes. | 1 | |
| 02.06 | Loss of ACI Signal (4-20mA) | 0: Decelerate to 0 Hz<br>1: Coast to stop and display "AErr"<br>2: Continue operation by last frequency command | 1 | |
| 02.07 | Up/Down Mode | 0: by UP/DOWN Key<br>1: Based on accel/decel time<br>2: Constant speed (Pr.02.08)<br>3: Pulse input unit (Pr.02.08) | 0 | |
| 02.08 | Accel/Decel Rate of Change of UP/DOWN Operation with Constant Speed | 0.01~10.00 Hz/2ms | 0.01 | |
| ✓02.09 | Source of Second Frequency Command | 0: Digital keypad UP/DOWN keys or Multi-function Inputs UP/DOWN. Last used frequency saved.<br>1: 0 to +10V from AVI<br>2: 4 to 20mA from ACI or 0 to +10V from AVI2<br>3: RS-485 (RJ-45)/USB communication<br>4: Digital keypad potentiometer | 0 | |
| ✓02.10 | Combination of the First and Second Master Frequency Command | 0: First Master Frequency Command<br>1: First Master Frequency Command+ Second Master Frequency Command<br>2: First Master Frequency Command - Second Master Frequency Command | 0 | |

| Parameter | Explanation | Settings | Factory Setting | Customer |
|---|---|---|---|---|
| ✓02.11 | Keypad Frequency Command | 0.00 to 600.00Hz<br>(Japanese version: 0.00 to 599.00 Hz ) | 60.00 | |
| ✓02.12 | Communication Frequency Command | 0.00 to 600.00Hz<br>(Japanese version: 0.00 to 599.00 Hz ) | 60.00 | |
| 02.13 | The Selections for Saving Keypad or Communication Frequency Command | 0: Save Keypad & Communication Frequency<br>1: Save Keypad Frequency only<br>2: Save Communication Frequency only | 0 | |
| 02.14 | Initial Frequency Selection (for keypad & RS485/USB) | 0: by Current Freq Command<br>1: by Zero Freq Command<br>2: Refer to Pr.02-15 to set up | 0 | |
| 02.15 | Initial Frequency Set point (for keypad & RS485/USB) | 0.00 ~ 600.00Hz<br>(Japanese version: 0.00 to 599.00 Hz ) | 60.00 | |
| 02.16 | Display the Master Freq Command Source | Read Only<br>Bit0=1: by First Freq Source (Pr.02.00)<br>Bit1=1: by Second Freq Source (Pr.02.09)<br>Bit2=1: by Multi-input function<br>Bit3=1: by PLC Freq command (NOT for VFD*E*C models) | 1 | |
| 02.17 | Display the Operation Command Source | Read Only<br>Bit0=1: by Digital Keypad<br>Bit1=1: by RS485 communication<br>Bit2=1: by External Terminal 2/3 wire mode<br>Bit3=1: by Multi-input function<br>Bit4=1: by PLC Operation Command (NOT for VFD*E*C models)<br>Bit5=1: by CANopen communication | 4 | |
| 02.18 | Selection of Carrier Modulation | 0: by carrier modulation of load current and temperature<br>1: by carrier modulation of load current | 0 | |
| 02.19 | Selection of Zero speed control mode | 0: Enter standby mode when zero speed<br>1: Run DC brake when zero speed(the max. output voltage *0.05 ) | 0 | |

# Group 3 Output Function Parameters

| Parameter | Explanation | Settings | Factory Setting | Customer |
|---|---|---|---|---|
| 03.00 | Multi-function Output Relay (RA1, RB1, RC1) | 0: No function<br>1: AC drive operational<br>2: Master frequency attained<br>3: Zero speed<br>4: Over torque detection | 8 | |
| 03.01 | Multi-function Output Terminal MO1 | 5: Base-Block (B.B.) indication<br>6: Low-voltage indication<br>7: Operation mode indication<br>8: Fault indication<br>9: Desired frequency 1 attained<br>10: Terminal count value attained<br>11: Preliminary count value attained<br>12: Over Voltage Stall supervision<br>13: Over Current Stall supervision<br>14: IGBT overheat warning (ON: 85℃, OFF: 80℃)<br>15: Over Voltage supervision<br>16: PID supervision<br>17: Forward command<br>18: Reverse command<br>19: Zero speed output signal<br>20: Warning(FbE,Cexx, AoL2, AUE, SAvE)<br>21: Brake control (Desired frequency attained)<br>22: Drive ready<br>23: Desired frequency 2 attained<br>24 :Function of Output Frequency Control Multi-output terminal ON/OFF | 1 | |

| Parameter | Explanation | Settings | Factory Setting | Customer |
|---|---|---|---|---|
| 03.02 | Desired Frequency 1 Attained | 0.00 to 600.00Hz<br>(Japanese version: 0.00 to 599.00 Hz ) | 0.00 | |
| ✓03.03 | Analog Output Signal Selection (AFM) | 0: Analog frequency meter<br>1: Analog current meter | 0 | |
| ✓03.04 | Analog Output Gain | 1 to 200% | 100 | |
| 03.05 | Terminal Count Value | 0 to 9999 | 0 | |
| 03.06 | Preliminary Count Value | 0 to 9999 | 0 | |
| 03.07 | EF Active When Terminal Count Value Attained | 0: Terminal count value attained, no EF display<br>1: Terminal count value attained, EF active | 0 | |
| 03.08 | Fan Control | 0: Fan always ON<br>1: 1 minute after AC motor drive stops, fan will be OFF<br>2: Fan ON when AC motor drive runs, fan OFF when AC motor drive stops<br>3: Fan ON when preliminary heatsink temperature attained (ON: 60℃, Off: 40℃) | 0 | |
| 03.09 | The Digital Output Used by PLC<br>(NOT for VFD*E*C models) | Read only<br>Bit0=1:RLY used by PLC<br>Bit1=1:MO1 used by PLC<br>Bit2=1:MO2/RA2 used by PLC<br>Bit3=1:MO3/RA3 used by PLC<br>Bit4=1:MO4/RA4 used by PLC<br>Bit5=1:MO5/RA5 used by PLC<br>Bit6=1:MO6/RA6 used by PLC<br>Bit7=1:MO7/RA7 used by PLC | ## | |
| 03.10 | The Analog Output Used by PLC<br>(NOT for VFD*E*C models) | Read only<br>Bit0=1:AFM used by PLC<br>Bit1=1: AO1 used by PLC | ## | |

| Parameter | Explanation | Settings | Factory Setting | Customer |
|---|---|---|---|---|
| | | Bit2=1: AO2 used by PLC | | |
| 03.11 | Brake Release Frequency | 0.00 to 20.00Hz | 0.00 | |
| 03.12 | Brake Engage Frequency | 0.00 to 20.00Hz | 0.00 | |
| 03.13 | Display the Status of Multi-function Output Terminals | Read only<br>Bit0: RLY Status<br>Bit1: MO1 Status<br>Bit2: MO2/RA2 Status<br>Bit3: MO3/RA3 Status<br>Bit4: MO4/RA4 Status<br>Bit5: MO5/RA5 Status<br>Bit6: MO6/RA6 Status<br>Bit7: MO7/RA7 Status | ## | |
| 03.14 | Desired Frequency 2 Attained | 0.00 to 600.00Hz<br>(Japanese version: 0.00 to 599.00 Hz ) | 0.00 | |

# Group 4 Input Function Parameters

| Parameter | Explanation | Settings | Factory Setting | Customer |
|---|---|---|---|---|
| ⚡04.00 | Keypad Potentiometer Bias | 0.0 to 200.0 % | 0.0 | |
| ⚡04.01 | Keypad Potentiometer Bias Polarity | 0: Positive bias<br>1: Negative bias | 0 | |
| ⚡04.02 | Keypad Potentiometer Gain | 0.1 to 200.0 % | 100.0 | |
| 04.03 | Keypad Potentiometer Negative Bias, Reverse Motion Enable/Disable | 0: No negative bias command<br>1: Negative bias: REV motion enabled | 0 | |
| 04.04 | 2-wire/3-wire Operation Control Modes | 0: 2-wire: FWD/STOP, REV/STOP<br>1: 2-wire: FWD/REV, RUN/STOP<br>2: 3-wire operation | 0 | |
| 04.05 | Multi-function Input Terminal (MI3) | 0: No function<br>1: Multi-Step speed command 1<br>2: Multi-Step speed command 2<br>3: Multi-Step speed command 3<br>4: Multi-Step speed command 4<br>5: External reset<br>6: Accel/Decel inhibit<br>7: Accel/Decel time selection command<br>8: Jog Operation<br>9: External base block<br>10: Up: Increment master frequency<br>11: Down: Decrement master frequency<br>12: Counter Trigger Signal<br>13: Counter reset<br>14: E.F. External Fault Input<br>15: PID function disabled | 1 | |
| 04.06 | Multi-function Input Terminal (MI4) | | 2 | |
| 04.07 | Multi-function Input Terminal (MI5) | | 3 | |
| 04.08 | Multi-function Input Terminal (MI6) | | 4 | |
| | | | | |

| Parameter | Explanation | Settings | Factory Setting | Customer |
|---|---|---|---|---|
| | | 16: Output shutoff stop<br>17: Parameter lock enable<br>18: Operation command selection (external terminals)<br>19: Operation command selection(keypad)<br>20: Operation command selection (communication)<br>21: FWD/REV command<br>22: Source of second frequency command<br>23: Run/Stop PLC Program (PLC1) (NOT for VFD*E*C models)<br>23: Quick Stop (Only for VFD*E*C models)<br>24: Download/execute/monitor PLC Program (PLC2) (NOT for VFD*E*C models)<br>25: Simple position function<br>26: OOB (Out of Balance Detection)<br>27: Motor selection (bit 0)<br>28: Motor selection (bit 1) | | |
| 04.09 | Multi-function Input Contact Selection | 0~4095 | 0 | |
| 04.10 | Digital Terminal Input Debouncing Time | 1 to 20 (*2ms) | 1 | |
| 04.11 | Min AVI Voltage | 0.0 to 10.0V | 0.0 | |
| 04.12 | Min AVI Frequency | 0.0 to 100.0% F max. | 0.0 | |
| 04.13 | Max AVI Voltage | 0.0 to 10.0V | 10.0 | |
| 04.14 | Max AVI Frequency | 0.0 to 100.0% F max. | 100.0 | |
| 04.15 | Min ACI Current | 0.0 to 20.0mA | 4.0 | |
| 04.16 | Min ACI Frequency | 0.0 to 100.0% F max. | 0.0 | |
| 04.17 | Max ACI Current | 0.0 to 20.0mA | 20.0 | |
| 04.18 | Max ACI Frequency | 0.0 to 100.0% | 100.0 | |
| 04.19 | ACI/AVI2 Selection | 0: ACI<br>1: AVI2 | 0 | |

| Parameter | Explanation | Settings | Factory Setting | Customer |
|---|---|---|---|---|
| 04.20 | Min AVI2 Voltage | 0.0 to 10.0V | 0.0 | |
| 04.21 | Min AVI2 Frequency | 0.0 to 100.0% F max. | 0.0 | |
| 04.22 | Max AVI2 Voltage | 0.0 to 10.0V | 10.0 | |
| 04.23 | Max AVI2 Frequency | 0.0 to 100.0% F max. | 100.0 | |
| 04.24 | The Digital Input Used by PLC<br>(NOT for VFD*E*C models) | Read only<br>Bit0=1:MI1 used by PLC<br>Bit1=1:MI2 used by PLC<br>Bit2=1:MI3 used by PLC<br>Bit3=1:MI4 used by PLC<br>Bit4=1:MI5 used by PLC<br>Bit5=1:MI6 used by PLC<br>Bit6=1: MI7 used by PLC<br>Bit7=1: MI8 used by PLC<br>Bit8=1: MI9 used by PLC<br>Bit9=1: MI10 used by PLC<br>Bit10=1: MI11 used by PLC<br>Bit11=1: MI12 used by PLC | ## | |
| 04.25 | The Analog Input Used by PLC<br>(NOT for VFD*E*C models) | Read only<br>Bit0=1:AVI used by PLC<br>Bit1=1:ACI/AVI2 used by PLC<br>Bit2=1: AI1 used by PLC<br>Bit3=1: AI2 used by PLC | ## | |
| 04.26 | Display the Status of Multi-function Input Terminal | Read only<br>Bit0: MI1 Status<br>Bit1: MI2 Status<br>Bit2: MI3 Status<br>Bit3: MI4 Status<br>Bit4: MI5 Status | ## | |

| Parameter | Explanation | Settings | Factory Setting | Customer |
|---|---|---|---|---|
| | | Bit5: MI6 Status<br>Bit6: MI7 Status<br>Bit7: MI8 Status<br>Bit8: MI9 Status<br>Bit9: MI10 Status<br>Bit10: MI11 Status<br>Bit11: MI12 Status | | |
| 04.27 | Internal/External Multi-function Input Terminals Selection | 0~4095 | 0 | |
| ✓04.28 | Internal Terminal Status | 0~4095 | 0 | |
| 04.29 | ACI Filter Time | 0~9999 (x2ms) | 50 | |

# Group 5 Multi-Step Speeds Parameters

| Parameter | Explanation | Settings | Factory Setting | Customer |
|---|---|---|---|---|
| ⌿05.00 | 1st Step Speed Frequency | 0.00 to 600.00 Hz<br>(Japanese version: 0.00 to 599.00 Hz ) | 0.00 | |
| ⌿05.01 | 2nd Step Speed Frequency | 0.00 to 600.00 Hz<br>(Japanese version: 0.00 to 599.00 Hz ) | 0.00 | |
| ⌿05.02 | 3rd Step Speed Frequency | 0.00 to 600.00 Hz<br>(Japanese version: 0.00 to 599.00 Hz ) | 0.00 | |
| ⌿05.03 | 4th Step Speed Frequency | 0.00 to 600.00 Hz<br>(Japanese version: 0.00 to 599.00 Hz ) | 0.00 | |
| ⌿05.04 | 5th Step Speed Frequency | 0.00 to 600.00 Hz<br>(Japanese version: 0.00 to 599.00 Hz ) | 0.00 | |
| ⌿05.05 | 6th Step Speed Frequency | 0.00 to 600.00 Hz<br>(Japanese version: 0.00 to 599.00 Hz ) | 0.00 | |
| ⌿05.06 | 7th Step Speed Frequency | 0.00 to 600.00 Hz<br>(Japanese version: 0.00 to 599.00 Hz ) | 0.00 | |
| ⌿05.07 | 8th Step Speed Frequency | 0.00 to 600.00 Hz<br>(Japanese version: 0.00 to 599.00 Hz ) | 0.00 | |
| ⌿05.08 | 9th Step Speed Frequency | 0.00 to 600.00 Hz<br>(Japanese version: 0.00 to 599.00 Hz ) | 0.00 | |
| ⌿05.09 | 10th Step Speed Frequency | 0.00 to 600.00 Hz<br>(Japanese version: 0.00 to 599.00 Hz ) | 0.00 | |
| ⌿05.10 | 11th Step Speed Frequency | 0.00 to 600.00 Hz<br>(Japanese version: 0.00 to 599.00 Hz ) | 0.00 | |
| ⌿05.11 | 12th Step Speed Frequency | 0.00 to 600.00 Hz<br>(Japanese version: 0.00 to 599.00 Hz ) | 0.00 | |
| ⌿05.12 | 13th Step Speed Frequency | 0.00 to 600.00 Hz<br>(Japanese version: 0.00 to 599.00 Hz ) | 0.00 | |
| ⌿05.13 | 14th Step Speed Frequency | 0.00 to 600.00 Hz<br>(Japanese version: 0.00 to 599.00 Hz ) | 0.00 | |
| ⌿05.14 | 15th Step Speed Frequency | 0.00 to 600.00 Hz<br>(Japanese version: 0.00 to 599.00 Hz ) | 0.00 | |

# Group 6 Protection Parameters

| Parameter | Explanation | Settings | Factory Setting | Customer |
|---|---|---|---|---|
| 06.00 | Over-Voltage Stall Prevention | 115/230V series: 330.0V to 410.0V<br>460V series: 660.0V to 820.0V<br>0.0: Disable over-voltage stall prevention | 390.0V<br>780.0V | |
| 06.01 | Over-Current Stall Prevention during Accel | 0:Disable<br>20 to 250% | 170 | |
| 06.02 | Over-Current Stall Prevention during Operation | 0:Disable<br>20 to 250% | 170 | |
| 06.03 | Over-Torque Detection Mode (OL2) | 0: Disabled<br>1: Enabled during constant speed operation. After the over-torque is detected, keep running until OL1 or OL occurs.<br>2: Enabled during constant speed operation. After the over-torque is detected, stop running.<br>3: Enabled during accel. After the over-torque is detected, keep running until OL1 or OL occurs.<br>4: Enabled during accel. After the over-torque is detected, stop running. | 0 | |
| ⚡06.04 | Over-Torque Detection Level | 10 to 200% | 150 | |
| 06.05 | Over-Torque Detection Time | 0.1 to 60.0 sec | 0.1 | |
| 06.06 | Electronic Thermal Overload Relay Selection | 0: Standard motor (self cooled by fan)<br>1: Special motor (forced external cooling)<br>2: Disabled | 2 | |
| 06.07 | Electronic Thermal Characteristic | 30 to 600 sec | 60 | |
| 06.08 | Present Fault Record | 0: No fault<br>1: Over current (oc)<br>2: Over voltage (ov)<br>3: IGBT Overheat (oH1) | 0 | |

| Parameter | Explanation | Settings | Factory Setting | Customer |
|---|---|---|---|---|
| | | 4: Reserved<br>5: Overload (oL)<br>6: Overload1 (oL1)<br>7: Motor over load (oL2) | | |
| 06.09 | Second Most Recent Fault Record | 8: External fault (EF)<br>9: Current exceeds 2 times rated current during accel.(ocA)<br>10: Current exceeds 2 times rated current during decel.(ocd)<br>11: Current exceeds 2 times rated current during steady state operation (ocn)<br>12: Ground fault (GFF)<br>13: Reserved<br>14: Phase-Loss (PHL)<br>15: Reserved<br>16: Auto Acel/Decel failure (CFA)<br>17: SW/Password protection (codE)<br>18: Power Board CPU WRITE failure (cF1.0)<br>19: Power Board CPU READ failure (cF2.0)<br>20: CC, OC Hardware protection failure (HPF1)<br>21: OV Hardware protection failure (HPF2)<br>22: GFF Hardware protection failure (HPF3)<br>23: OC Hardware protection failure (HPF4)<br>24: U-phase error (cF3.0)<br>25: V-phase error (cF3.1)<br>26: W-phase error (cF3.2)<br>27: DCBUS error (cF3.3)<br>28: IGBT Overheat (cF3.4)<br>29: Reserved<br>30: Control Board CPU WRITE failure (cF1.1) | | |
| 06.10 | Third Most Recent Fault Record | | | |
| 06.11 | Fourth Most Recent Fault Record | | | |
| 06.12 | Fifth Most Recent Fault Record | | | |

| Parameter | Explanation | Settings | Factory Setting | Customer |
|---|---|---|---|---|
| | | 31: Control Board CPU WRITE failure (cF2.1)<br>32: ACI signal error (AErr)<br>33: Reserved | | |
| | | 34: Motor PTC overheat protection (PtC1)<br>35: PG feedback signal error (PGEr)<br>36-39: Reserved<br>40: Communication time-out error of control board and power board (CP10)<br>41: dEb error<br>42: ACL (Abnormal Communication Loop)<br>66: U phase output phase loss (oPHL1)<br>67: V phase output phase loss (oPHL2)<br>68: W phase output phase loss (oPHL3) | | |
| 06.13 | Action for detected Output Phase Loss (OPHL) | 0 : Warn and keep operation<br>1 : Warn and ramp to stop<br>2 : Warn and coast to stop<br>3 : No warning | 3 | |
| 06.14 | Deceleration Time of Output Phase Loss | 0.0~120.0 seconds | 0.5 | |
| 06.15 | Detected Current Bandwidth | 0~100% | 2 | |
| 06.16 | Detected DC Brake Time of Output Phase Loss | 0.0~120.0 seconds | 0.1 | |

# Group 7 Motor Parameters

| Parameter | Explanation | Settings | Factory Setting | Customer |
|---|---|---|---|---|
| 07.00 | Motor Rated Current (Motor 0) | 30 %FLA to 120% FLA | FLA | |
| 07.01 | Motor No-Load Current (Motor 0) | 0%FLA to 99% FLA | 0.4*FLA | |
| ⋀07.02 | Torque Compensation (Motor 0) | 0.0 to 10.0 | 0.0 | |
| ⋀07.03 | Slip Compensation (Used without PG) (Motor 0) | 0.00 to 10.00 | 0.00 | |
| 07.04 | Motor Parameters Auto Tuning | 0: Disable<br>1: Auto tuning R1<br>2: Auto tuning R1 + no-load test | 0 | |
| 07.05 | Motor Line-to-line Resistance R1 (Motor 0) | 0~65535 mΩ | 0 | |
| 07.06 | Motor Rated Slip (Motor 0) | 0.00 to 20.00 Hz | 3.00 | |
| 07.07 | Slip Compensation Limit | 0 to 250% | 200 | |
| 07.08 | Torque Compensation Time Constant | 0.01 ~10.00 Sec | 0.30 | |
| 07.09 | Slip Compensation Time Constant | 0.05 ~10.00 sec | 0.20 | |
| 07.10 | Accumulative Motor Operation Time (Min.) | 0 to 1439 Min. | ## | |
| 07.11 | Accumulative Motor Operation Time (Day) | 0 to 65535 Day | ## | |
| 07.12 | Motor PTC Overheat Protection | 0: Disable<br>1: Enable | 0 | |
| 07.13 | Input Debouncing Time of the PTC Protection | 0~9999(*2ms) | 100 | |

| Parameter | Explanation | Settings | Factory Setting | Customer |
|---|---|---|---|---|
| 07.14 | Motor PTC Overheat Protection Level | 0.1~10.0V | 2.4 | |
| 07.15 | Motor PTC Overheat Warning Level | 0.1~10.0V | 1.2 | |
| 07.16 | Motor PTC Overheat Reset Delta Level | 0.1~5.0V | 0.6 | |
| 07.17 | Treatment of the Motor PTC Overheat | 0: Warn and RAMP to stop<br>1: Warn and COAST to stop<br>2: Warn and keep running | 0 | |
| 07.18 | Motor Rated Current (Motor 1) | 30 %FLA to 120% FLA | FLA | |
| 07.19 | Motor No-Load Current (Motor 1) | 0%FLA to 99% FLA | 0.4*FLA | |
| ⁄07.20 | Torque Compensation (Motor 1) | 0.0 to 10.0 | 0.0 | |
| ⁄07.21 | Slip Compensation (Used without PG) (Motor 1) | 0.00 to 10.00 | 0.00 | |
| 07.22 | Motor Line-to-line Resistance R1 (Motor 1) | 0~65535 mΩ | 0 | |
| 07.23 | Motor Rated Slip (Motor 1) | 0.00 to 20.00 Hz | 3.00 | |
| 07.24 | Motor Pole Number (Motor 1) | 2 to 10 | 4 | |
| 07.25 | Motor Rated Current (Motor 2) | 30 %FLA to 120% FLA | FLA | |
| 07.26 | Motor No-Load Current (Motor 2) | 0%FLA to 99% FLA | 0.4*FLA | |
| ⁄07.27 | Torque Compensation (Motor 2) | 0.0 to 10.0 | 0.0 | |
| ⁄07.28 | Slip Compensation (Used without PG) (Motor 2) | 0.00 to 10.00 | 0.00 | |

| Parameter | Explanation | Settings | Factory Setting | Customer |
|---|---|---|---|---|
| 07.29 | Motor Line-to-line Resistance R1 (Motor 2) | 0~65535 mΩ | 0 | |
| 07.30 | Motor Rated Slip (Motor 2) | 0.00 to 20.00 Hz | 3.00 | |
| 07.31 | Motor Pole Number (Motor 3) | 2 to 10 | 4 | |
| 07.32 | Motor Rated Current (Motor 3) | 30 %FLA to 120% FLA | FLA | |
| 07.33 | Motor No-Load Current (Motor 3) | 0%FLA to 99% FLA | 0.4*FLA | |
| ⚡07.34 | Torque Compensation (Motor 3) | 0.0 to 10.0 | 0.0 | |
| ⚡07.35 | Slip Compensation (Used without PG) (Motor 3) | 0.00 to 10.00 | 0.00 | |
| 07.36 | Motor Line-to-line Resistance R1 (Motor 3) | 0~65535 mΩ | 0 | |
| 07.37 | Motor Rated Slip (Motor 3) | 0.00 to 20.00 Hz | 3.00 | |
| 07.38 | Motor Pole Number (Motor 3) | 2 to 10 | 4 | |

# Group 8 Special Parameters

| Parameter | Explanation | Settings | Factory Setting | Customer |
|---|---|---|---|---|
| 08.00 | DC Brake Current Level | 0 to 100% | 0 | |
| 08.01 | DC Brake Time during Start-Up | 0.0 to 60.0 sec | 0.0 | |
| 08.02 | DC Brake Time during Stopping | 0.0 to 60.0 sec | 0.0 | |
| 08.03 | Start-Point for DC Brake | 0.00 to 600.00 Hz<br>(Japanese version: 0.00 to 599.00 Hz ) | 0.00 | |
| 08.04 | Momentary Power Loss Operation Selection | 0: Operation stops after momentary power loss<br>1: Operation continues after momentary power loss, speed search starts with the Last Frequency<br>2: Operation continues after momentary power loss, speed search starts with the minimum frequency | 0 | |
| 08.05 | Maximum Allowable Power Loss Time | 0.1 to 20.0 sec | 2.0 | |
| 08.06 | Base-block Speed Search | 0: Disable speed search<br>1: Speed search starts with last frequency<br>2: Starts with minimum output frequency | 1 | |
| 08.07 | B.B. Time for Speed Search | 0.1 to 5.0 sec | 0.5 | |
| 08.08 | Current Limit for Speed Search | 30 to 200% | 150 | |
| 08.09 | Skip Frequency 1 Upper Limit | 0.00 to 600.00 Hz<br>(Japanese version: 0.00 to 599.00 Hz ) | 0.00 | |
| 08.10 | Skip Frequency 1 Lower Limit | 0.00 to 600.00 Hz<br>(Japanese version: 0.00 to 599.00 Hz ) | 0.00 | |
| 08.11 | Skip Frequency 2 Upper Limit | 0.00 to 600.00 Hz<br>(Japanese version: 0.00 to 599.00 Hz ) | 0.00 | |
| 08.12 | Skip Frequency 2 Lower Limit | 0.00 to 600.00 Hz<br>(Japanese version: 0.00 to 599.00 Hz ) | 0.00 | |
| 08.13 | Skip Frequency 3 Upper Limit | 0.00 to 600.00 Hz<br>(Japanese version: 0.00 to 599.00 Hz ) | 0.00 | |

| Parameter | Explanation | Settings | Factory Setting | Customer |
|---|---|---|---|---|
| 08.14 | Skip Frequency 3 Lower Limit | 0.00 to 600.00 Hz<br>(Japanese version: 0.00 to 599.00 Hz ) | 0.00 | |
| 08.15 | Auto Restart After Fault | 0 to 10 (0=disable) | 0 | |
| 08.16 | Auto Reset Time at Restart after Fault | 0.1 to 6000 sec | 60.0 | |
| 08.17 | Auto Energy Saving | 0: Disable<br>1: Enable | 0 | |
| 08.18 | AVR Function | 0: AVR function enable<br>1: AVR function disable<br>2: AVR function disable for decel.<br>3: AVR function disable for stop | 0 | |
| 08.19 | Software Brake Level | 115V / 230V series: 370.0to 430.0V<br>460V series: 740.0 to 860.0V | 380.0<br>760.0 | |
| ⚡08.20 | Compensation Coefficient for Motor Instability | 0.0~5.0 | 0.0 | |
| 08.21 | OOB Sampling Time | 0.1 to 120.0 sec | 1.0 | |
| 08.22 | Number of OOB Sampling Times | 00 to 32 | 20 | |
| 08.23 | OOB Average Sampling Angle | Read only | #.# | |
| 08.24 | DEB Function | 0: Disable<br>1: Enable | 0 | |
| 08.25 | DEB Return Time | 0 to 25 sec | 0 | |
| 08.26 | Speed Search during Start-up | 0: Disable<br>1: Enable | 0 | |
| 08.27 | Speed Search Frequency during Start-up | 0: By setting frequency<br>1: By max. operation frequency (Pr.01.00) | 0 | |
| 08.28 | Output Voltage Limit | 80~150% | 100 | |
| 08.29 | Special Bit Control Parameter | Bit0=1,cancel internal frequency command filter | 0 | |

# Group 9 Communication Parameters

| Parameter | Explanation | Settings | Factory Setting | Customer |
|---|---|---|---|---|
| ⌿09.00 | Communication Address | 1 to 254 | 1 | |
| ⌿09.01 | Transmission Speed | 0: Baud rate 4800bps<br>1: Baud rate 9600bps<br>2: Baud rate 19200bps<br>3: Baud rate 38400bps | 1 | |
| ⌿09.02 | Transmission Fault Treatment | 0: Warn and keep operating<br>1: Warn and ramp to stop<br>2: Warn and coast to stop<br>3: No warning and keep operating | 3 | |
| ⌿09.03 | Time-out Detection | 0.1 ~ 120.0 seconds<br>0.0: Disable | 0.0 | |
| ⌿09.04 | Communication Protocol | 0: 7,N,2 (Modbus, ASCII)<br>1: 7,E,1 (Modbus, ASCII)<br>2: 7,O,1 (Modbus, ASCII)<br>3: 8,N,2 (Modbus, RTU)<br>4: 8,E,1 (Modbus, RTU)<br>5: 8,O,1 (Modbus, RTU)<br>6: 8,N,1 (Modbus, RTU)<br>7: 8,E,2 (Modbus, RTU)<br>8: 8,O,2 (Modbus, RTU)<br>9: 7,N,1 (Modbus, ASCII)<br>10: 7,E,2 (Modbus, ASCII)<br>11: 7,O,2 (Modbus, ASCII) | 0 | |
| 09.05 | Reserved | | | |
| 09.06 | Reserved | | | |
| ⌿09.07 | Response Delay Time | 0 ~ 200 (unit: 2ms) | 1 | |

| Parameter | Explanation | Settings | Factory Setting | Customer |
|---|---|---|---|---|
| ✓09.08 | Transmission Speed for USB Card | 0: Baud rate 4800 bps<br>1: Baud rate 9600 bps<br>2: Baud rate 19200 bps<br>3: Baud rate 38400 bps<br>4: Baud rate 57600 bps | 2 | |
| ✓09.09 | Communication Protocol for USB Card | 0: 7,N,2 for ASCII<br>1: 7,E,1 for ASCII<br>2: 7,O,1 for ASCII<br>3: 8,N,2 for RTU<br>4: 8,E,1 for RTU<br>5: 8,O,1 for RTU<br>6: 8,N,1 (Modbus, RTU)<br>7: 8,E,2 (Modbus, RTU)<br>8: 8,O,2 (Modbus, RTU)<br>9: 7,N,1 (Modbus, ASCII)<br>10: 7,E,2 (Modbus, ASCII)<br>11: 7,O,2 (Modbus, ASCII) | 1 | |
| ✓09.10 | Transmission Fault Treatment for USB Card | 0: Warn and keep operating<br>1: Warn and ramp to stop<br>2: Warn and coast to stop<br>3: No warning and keep operating | 0 | |
| ✓09.11 | Time-out Detection for USB Card | 0.1 ~ 120.0 seconds<br>0.0: Disable | 0.0 | |
| 09.12 | COM port for PLC Communication<br>(NOT for VFD*E*C models) | 0: RS485<br>1: USB card | 0 | |

# Group 10 PID Control Parameters

| Parameter | Explanation | Settings | Factory Setting | Customer |
|---|---|---|---|---|
| 10.00 | PID Set Point Selection | 0: Disable PID operation<br>1: Keypad (based on Pr.02.00)<br>2: 0 to +10V from AVI<br>3: 4 to 20mA from ACI or 0 to +10V from AVI2<br>4: PID set point (Pr.10.11) | 0 | |
| 10.01 | Input Terminal for PID Feedback | 0: Positive PID feedback from external terminal AVI (0 ~ +10VDC)<br>1: Negative PID feedback from external terminal AVI (0 ~ +10VDC)<br>2: Positive PID feedback from external terminal ACI (4 ~ 20mA)/ AVI2 (0 ~ +10VDC).<br>3: Negative PID feedback from external terminal ACI (4 ~ 20mA)/ AVI2 (0 ~ +10VDC). | 0 | |
| ⌿10.02 | Proportional Gain (P) | 0.0 to 10.0 | 1.0 | |
| ⌿10.03 | Integral Time (I) | 0.00 to 100.0 sec (0.00=disable) | 1.00 | |
| ⌿10.04 | Derivative Control (D) | 0.00 to 1.00 sec | 0.00 | |
| 10.05 | Upper Bound for Integral Control | 0 to 100% | 100 | |
| 10.06 | Primary Delay Filter Time | 0.0 to 2.5 sec | 0.0 | |
| 10.07 | PID Output Freq Limit | 0 to 110% | 100 | |
| 10.08 | PID Feedback Signal Detection Time | 0.0 to 3600 sec (0.0 disable) | 60.0 | |
| 10.09 | Treatment of the Erroneous PID Feedback Signals | 0: Warn and RAMP to stop<br>1: Warn and COAST to stop<br>2: Warn and keep operation | 0 | |
| 10.10 | Gain Over the PID Detection Value | 0.0 to 10.0 | 1.0 | |

| Parameter | Explanation | Settings | Factory Setting | Customer |
|---|---|---|---|---|
| ⚡10.11 | Source of PID Set point | 0.00 to 600.00 Hz<br>(Japanese version: 0.00 to 599.00 Hz ) | 0.00 | |
| 10.12 | PID Offset Level | 1.0 to 50.0% | 10.0 | |
| 10.13 | Detection Time of PID Offset | 0.1 to 300.0 sec | 5.0 | |
| 10.14 | Sleep/Wake Up Detection Time | 0.0 to 6550 sec | 0.0 | |
| 10.15 | Sleep Frequency | 0.00 to Fmax. Hz | 0.00 | |
| 10.16 | Wakeup Frequency | 0.00 to Fmax. Hz | 0.00 | |
| 10.17 | Minimum PID Output Frequency Selection | 0: By PID control<br>1: By minimum output frequency (Pr.01.05) | 0 | |

# Group 11 Parameters for Extension Card

| Parameter | Explanation | Settings | Factory Setting | Customer |
|---|---|---|---|---|
| 11.00 | Multi-function Output Terminal MO2/RA2 | 0: No function<br>1: AC drive operational<br>2: Master frequency attained<br>3: Zero speed<br>4: Over torque detection<br>5: Base-Block (B.B.) indication<br>6: Low-voltage indication<br>7: Operation mode indication<br>8: Fault indication<br>9: Desired frequency 1 attained<br>10: Terminal count value attained<br>11: Preliminary count value attained<br>12: Over Voltage Stall supervision<br>13: Over Current Stall supervision<br>14: IGBT overheat warning (ON: 85℃, OFF: 80℃)<br>15: Over Voltage supervision<br>16: PID supervision<br>17: Forward command<br>18: Reverse command<br>19: Zero speed output signal<br>20: Warning(FbE,Cexx, AoL2, AUE, SAvE)<br>21: Brake control (Desired frequency attained)<br>22: Drive ready<br>23: Desired frequency 2 attained<br>24 :Function of output frequency control multi-output terminal ON/OFF | 0 | |
| 11.01 | Multi-function Output Terminal MO3/RA3 | | 0 | |
| 11.02 | Multi-function Output Terminal MO4/RA4 | | 0 | |
| 11.03 | Multi-function Output Terminal MO5/RA5 | | 0 | |
| 11.04 | Multi-function Output Terminal MO6/RA6 | | 0 | |
| 11.05 | Multi-function Output Terminal MO7/RA7 | | 0 | |

| Parameter | Explanation | Settings | Factory Setting | Customer |
|---|---|---|---|---|
| 11.06 | Multi-function Input Terminal (MI7) | 0: No function<br>1: Multi-Step speed command 1<br>2: Multi-Step speed command 2<br>3: Multi-Step speed command 3<br>4: Multi-Step speed command 4<br>5: External reset<br>6: Accel/Decel inhibit<br>7: Accel/Decel time selection command<br>8: Jog Operation<br>9: External base block<br>10: Up: Increment master frequency<br>11: Down: Decrement master frequency<br>12: Counter Trigger Signal<br>13: Counter reset<br>14: E.F. External Fault Input<br>15: PID function disabled<br>16: Output shutoff stop<br>17: Parameter lock enable<br>18: Operation command selection (external terminals)<br>19: Operation command selection (keypad)<br>20: Operation command selection (communication)<br>21: FWD/REV command<br>22: Source of second frequency command<br>23: Run/Stop PLC Program (PLC1) (NOT for VFD*E*C models)<br>23: Quick Stop (Only for VFD*E*C models)<br>24: Download/execute/monitor PLC Program (PLC2) (NOT for VFD*E*C models) | 0 | |
| 11.07 | Multi-function Input Terminal (MI8) | | 0 | |
| 11.08 | Multi-function Input Terminal (MI9) | | 0 | |
| 11.09 | Multi-function Input Terminal (MI10) | | 0 | |
| 11.10 | Multi-function Input Terminal (MI11) | | 0 | |
| 11.11 | Multi-function Input Terminal (MI12) | | 0 | |

| Parameter | Explanation | Settings | Factory Setting | Customer |
|---|---|---|---|---|
| | | 25: Simple position function<br>26: OOB (Out of Balance Detection)<br>27: Motor selection (bit 0)<br>28: Motor selection (bit 1) | | |

# Group 12: Analog Input/ Output Parameters for Extension Card

| Parameter | Explanation | Settings | Factory Setting | Customer |
|---|---|---|---|---|
| 12.00 | AI1 Function Selection | 0: Disabled<br>1: Source of the 1st frequency<br>2: Source of the 2nd frequency<br>3: PID Set Point (PID enable)<br>4: Positive PID feedback<br>5: Negative PID feedback | 0 | |
| 12.01 | AI1 Analog Signal Mode | 0: ACI2 analog current (0.0 ~ 20.0mA)<br>1: AVI3 analog voltage (0.0 ~ 10.0V) | 1 | |
| 12.02 | Min. AVI3 Input Voltage | 0.0 to 10.0V | 0.0 | |
| 12.03 | Min. AVI3 Scale Percentage | 0.0 to 100.0% | 0.0 | |
| 12.04 | Max. AVI3 Input Voltage | 0.0 to 10.0V | 10.0 | |
| 12.05 | Max. AVI3 Scale Percentage | 0.0 to 100.0% | 100.0 | |
| 12.06 | Min. ACI2 Input Current | 0.0 to 20.0mA | 4.0 | |
| 12.07 | Min. ACI2 Scale Percentage | 0.0 to 100.0% | 0.0 | |
| 12.08 | Max. ACI2 Input Current | 0.0 to 20.0mA | 20.0 | |
| 12.09 | Max. ACI2 Scale Percentage | 0.0 to 100.0% | 100.0 | |
| 12.10 | AI2 Function Selection | 0: Disabled<br>1: Source of the 1st frequency<br>2: Source of the 2nd frequency<br>3: PID Set Point (PID enable)<br>4: Positive PID feedback<br>5: Negative PID feedback | 0 | |
| 12.11 | AI2 Analog Signal Mode | 0: ACI3 analog current (0.0 ~ 20.0mA)<br>1: AVI4 analog voltage (0.0 ~ 10.0V) | 1 | |

| Parameter | Explanation | Settings | Factory Setting | Customer |
|---|---|---|---|---|
| 12.12 | Min. AVI4 Input Voltage | 0.0 to 10.0V | 0.0 | |
| 12.13 | Min. AVI4 Scale Percentage | 0.0 to 100.0% | 0.0 | |
| 12.14 | Max. AVI4 Input Voltage | 0.0 to 10.0V | 10.0 | |
| 12.15 | Max. AVI4 Scale Percentage | 0.0 to 100.0% | 100.0 | |
| 12.16 | Min. ACI3 Input Current | 0.0 to 20.0mA | 4.0 | |
| 12.17 | Min. ACI3 Scale Percentage | 0.0 to 100.0% | 0.0 | |
| 12.18 | Max. ACI3 Input Current | 0.0 to 20.0mA | 20.0 | |
| 12.19 | Max. ACI3 Scale Percentage | 0.0 to 100.0% | 100.0 | |
| 12.20 | AO1 Terminal Analog Signal Mode | 0: AVO1<br>1: ACO1 (analog current 0.0 to 20.0mA)<br>2: ACO1 (analog current 4.0 to 20.0mA) | 0 | |
| 12.21 | AO1 Analog Output Signal | 0: Analog Frequency<br>1: Analog Current (0 to 250% rated current) | 0 | |
| 12.22 | AO1 Analog Output Gain | 1 to 200% | 100 | |
| 12.23 | AO2 Terminal Analog Signal Mode | 0: AVO2<br>1: ACO2 (analog current 0.0 to 20.0mA)<br>2: ACO2 (analog current 4.0 to 20.0mA) | 0 | |
| 12.24 | AO2 Analog Output Signal | 0: Analog Frequency<br>1: Analog Current (0 to 250% rated current) | 0 | |
| 12.25 | AO2 Analog Output Gain | 1 to 200% | 100 | |
| 12.26 | AUI Analog Input Selection | 0: No function<br>1: Source of the 1st frequency<br>2: Source of the 2nd frequency | 0 | |

| Parameter | Explanation | Settings | Factory Setting | Customer |
|---|---|---|---|---|
| ⋀12.27 | AUI Analog Input Bias | 0.00~200.00% | 0.00 | |
| 12.28 | AUI Bias Polarity | 0: Positive bias<br>1: Negative bias | 0 | |
| ⋀12.29 | AUI Analog Gain | 1~200% | 100 | |
| 12.30 | AUI Negative Bias, Reverse Motion Enable/Disable | 0: No AUI Negative Bias Command<br>1: Negative Bias: REV Motion Enabled<br>2: Negative Bias: REV Motion Disabled | 0 | |
| 12.31 | AUI Analog Input Delay | 0~9999 | 50 | |

# Group 13: PG function Parameters for Extension Card

| Parameter | Explanation | Settings | Factory Setting | Customer |
|---|---|---|---|---|
| 13.00 | PG Input | 0: Disabled<br>1: Single phase<br>2: Forward/Counterclockwise rotation<br>3: Reverse/Clockwise rotation | 0 | |
| 13.01 | PG Pulse Range | 1 to 20000 | 600 | |
| 13.02 | Motor Pole Number (Motor 0) | 2 to 10 | 4 | |
| ⁄ 13.03 | Proportional Gain (P) | 0.0 to 10.0 | 1.0 | |
| ⁄ 13.04 | Integral Gain (I) | 0.00 to 100.00 sec | 1.00 | |
| ⁄ 13.05 | Speed Control Output Frequency Limit | 0.00 to 100.00Hz | 10.00 | |
| ⁄ 13.06 | Speed Feedback Display Filter | 0 to 9999 (*2ms) | 500 | |
| ⁄ 13.07 | Detection Time for Feedback Signal Fault | 0.0: disabled<br>0.1 to 10.0 sec | 1.0 | |
| ⁄ 13.08 | Treatment of the Feedback Signal Fault | 0: Warn and RAMP to stop<br>1: Warn and COAST to stop<br>2: Warn and keep operation | 1 | |
| ⁄ 13.09 | Speed Feedback Filter | 0 to 9999 (*2ms) | 16 | |
| 13.10 | Source of the High-speed Counter | 0: PG card<br>1: PLC (NOT for VFD*E*C models) | Read Only | |

## 4.2 Parameter Settings for Applications

**Speed Search**

| Applications | Purpose | Functions | Related Parameters |
|---|---|---|---|
| Windmill, winding machine, fan and all inertia loads | Restart free-running motor | Before the free-running motor is completely stopped, it can be restarted without detection of motor speed. The AC motor drive will auto search motor speed and will accelerate when its speed is the same as the motor speed. | 08.04~08.08 |

**DC Brake before Running**

| Applications | Purpose | Functions | Related Parameters |
|---|---|---|---|
| When e.g. windmills, fans and pumps rotate freely by wind or flow without applying power | Keep the free-running motor at standstill. | If the running direction of the free-running motor is not steady, please execute DC brake before start-up. | 08.00<br>08.01 |

**Energy Saving**

| Applications | Purpose | Functions | Related Parameters |
|---|---|---|---|
| Punching machines fans, pumps and precision machinery | Energy saving and less vibrations | Energy saving when the AC motor drive runs at constant speed, yet full power acceleration and deceleration For precision machinery it also helps to lower vibrations. | 08.17 |

**Multi-step Operation**

| Applications | Purpose | Functions | Related Parameters |
|---|---|---|---|
| Conveying machinery | Cyclic operation by multi-step speeds. | To control 15-step speeds and duration by simple contact signals. | 04.05~04.10<br>05.00~05.14 |

**Switching acceleration and deceleration times**

| Applications | Purpose | Functions | Related Parameters |
|---|---|---|---|
| Auto turntable for conveying machinery | Switching acceleration and deceleration times by external signal | When an AC motor drive drives two or more motors, it can reach high-speed but still start and stop smoothly. | 01.09~01.12<br>04.05~04.08 |

Overheat Warning

| Applications | Purpose | Functions | Related Parameters |
|---|---|---|---|
| Air conditioner | Safety measure | When AC motor drive overheats, it uses a thermal sensor to have overheat warning. | 03.00~03.01<br>04.05~04.08 |

**Two-wire/three-wire**

| Applications | Purpose | Functions | Related Parameters |
|---|---|---|---|
| General application | To run, stop, forward and reverse by external terminals | 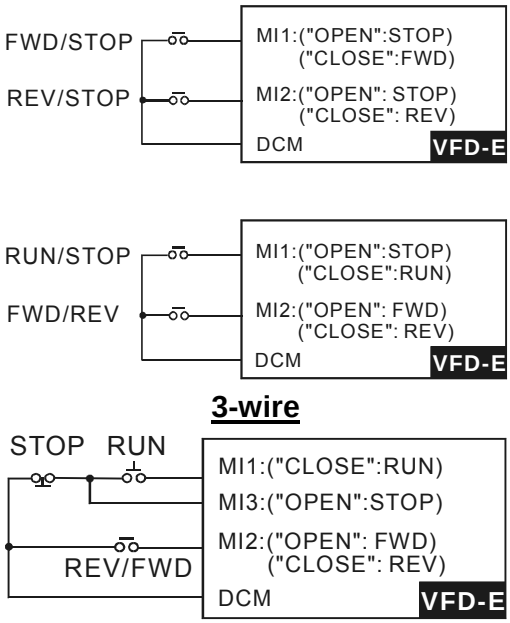 | 02.01<br>04.04 |

**Operation Command**

| Applications | Purpose | Functions | Related Parameters |
|---|---|---|---|
| General application | Selecting the source of control signal | Selection of AC motor drive control by external terminals, digital keypad or RS485. | 02.01<br>04.05~04.08 |

**Frequency Hold**

| Applications | Purpose | Functions | Related Parameters |
|---|---|---|---|
| General application | Acceleration/ deceleration pause | Hold output frequency during Acceleration/deceleration | 04.05~04.08 |

**Auto Restart after Fault**

| Applications | Purpose | Functions | Related Parameters |
|---|---|---|---|
| Air conditioners, remote pumps | For continuous and reliable operation without operator intervention | The AC motor drive can be restarted/reset automatically up to 10 times after a fault occurs. | 08.15~08.16 |

**Emergency Stop by DC Brake**

| Applications | Purpose | Functions | Related Parameters |
|---|---|---|---|
| High-speed rotors | Emergency stop without brake resistor | AC motor drive can use DC brake for emergency stop when quick stop is needed without brake resistor. When used often, take motor cooling into consideration. | 08.00<br>08.02<br>08.03 |

**Over-torque Setting**

| Applications | Purpose | Functions | Related Parameters |
|---|---|---|---|
| Pumps, fans and extruders | To protect machines and to have continuous/ reliable operation | The over-torque detection level can be set. Once OC stall, OV stall and over-torque occurs, the output frequency will be adjusted automatically. It is suitable for machines like fans and pumps that require continuous operation. | 06.00~06.05 |

**Upper/Lower Limit Frequency**

| Applications | Purpose | Functions | Related Parameters |
|---|---|---|---|
| Pump and fan | Control the motor speed within upper/lower limit | When user cannot provide upper/lower limit, gain or bias from external signal, it can be set individually in AC motor drive. | 01.07<br>01.08 |

**Skip Frequency Setting**

| Applications | Purpose | Functions | Related Parameters |
|---|---|---|---|
| Pumps and fans | To prevent machine vibrations | The AC motor drive cannot run at constant speed in the skip frequency range. Three skip frequency ranges can be set. | 08.09~08.14 |

**Carrier Frequency Setting**

| Applications | Purpose | Functions | Related Parameters |
|---|---|---|---|
| General application | Low noise | The carrier frequency can be increased when required to reduce motor noise. | 02.03 |

**Keep Running when Frequency Command is Lost**

| Applications | Purpose | Functions | Related Parameters |
|---|---|---|---|
| Air conditioners | For continuous operation | When the frequency command is lost by system malfunction, the AC motor drive can still run. Suitable for intelligent air conditioners. | 02.06 |

**Output Signal during Running**

| Applications | Purpose | Functions | Related Parameters |
|---|---|---|---|
| General application | Provide a signal for running status | Signal available to stop braking (brake release) when the AC motor drive is running. (This signal will disappear when the AC motor drive is free-running.) | 03.00~03.01 |

**Output Signal in Zero Speed**

| Applications | Purpose | Functions | Related Parameters |
|---|---|---|---|
| General application | Provide a signal for running status | When the output frequency is lower than the min. output frequency, a signal is given for external system or control wiring. | 03.00~03.01 |

**Output Signal at Desired Frequency**

| Applications | Purpose | Functions | Related Parameters |
|---|---|---|---|
| General application | Provide a signal for running status | When the output frequency is at the desired frequency (by frequency command), a signal is given for external system or control wiring (frequency attained). | 03.00~03.01 |

**Output Signal for Base Block**

| Applications | Purpose | Functions | Related Parameters |
|---|---|---|---|
| General application | Provide a signal for running status | When executing Base Block, a signal is given for external system or control wiring. | 03.00~03.01 |

**Overheat Warning for Heat Sink**

| Applications | Purpose | Functions | Related Parameters |
|---|---|---|---|
| General application | For safety | When heat sink is overheated, it will send a signal for external system or control wiring. | 03.00~03.01 |

**Multi-function Analog Output**

| Applications | Purpose | Functions | Related Parameters |
|---|---|---|---|
| General application | Display running status | The value of frequency, output current/voltage can be read by connecting a frequency meter or voltage/current meter. | 03.06 |

## 4.3 Description of Parameter Settings

### Group 0: User Parameters

This parameter can be set during operation

| **00.00** | Identity Code of the AC Motor Drive | |
|---|---|---|
| | Settings Read Only | Factory setting: ## |
| **00.01** | Rated Current Display of the AC Motor Drive | |
| | Settings Read Only | Factory setting: #.# |

Pr. 00.00 displays the identity code of the AC motor drive. The capacity, rated current, rated voltage and the max. carrier frequency relate to the identity code. Users can use the following table to check how the rated current, rated voltage and max. carrier frequency of the AC motor drive correspond to the identity code.

Pr.00.01 displays the rated current of the AC motor drive. By reading this parameter the user can check if the AC motor drive is correct.

| **115V Series** | | | |
|---|---|---|---|
| kW | 0.2 | 0.4 | 0.75 |
| HP | 0.25 | 0.5 | 1.0 |
| Pr.00.00 | 0 | 2 | 4 |
| Rated Output Current (A) | 1.6 | 2.5 | 4.2 |
| Max. Carrier Frequency | 15kHz | | |

| **230V Series** | | | | | | | | | | |
|---|---|---|---|---|---|---|---|---|---|---|
| kW | 0.2 | 0.4 | 0.75 | 1.5 | 2.2 | 3.7 | 5.5 | 7.5 | 11 | 15 |
| HP | 0.25 | 0.5 | 1.0 | 2.0 | 3.0 | 5.0 | 7.5 | 10 | 15 | 20 |
| Pr.00.00 | 0 | 2 | 4 | 6 | 8 | 10 | 12 | 14 | 16 | 18 |
| Rated Output Current (A) | 1.6 | 2.5 | 4.2 | 7.5 | 11.0 | 17 | 25 | 33 | 45 | 65 |
| Max. Carrier Frequency | 15kHz | | | | | | | | | |

| **460V Series** | | | | | | | | | | | |
|---|---|---|---|---|---|---|---|---|---|---|---|
| kW | 0.4 | 0.75 | 1.5 | 2.2 | 3.7 | 5.5 | 7.5 | 11 | 15 | 18.5 | 22 |
| HP | 0.5 | 1.0 | 2.0 | 3.0 | 5.0 | 7.5 | 10 | 15 | 20 | 25 | 30 |
| Pr.00.00 | 3 | 5 | 7 | 9 | 11 | 13 | 15 | 17 | 19 | 21 | 23 |
| Rated Output Current (A) | 1.5 | 2.5 | 4.2 | 5.5 | 8.5 | 13 | 18 | 24 | 32 | 38 | 45 |
| Max. Carrier Frequency | 15kHz | | | | | | | | | | |

## 00.02 Parameter Reset

Factory Setting: 0

| | | |
|---|---|---|
| Settings | 0 | Parameter can be read/written |
| | 1 | All parameters are read-only |
| | 6 | Clear PLC program (NOT for VFD*E*C models) |
| | 8 | Keypad Lock |
| | 9 | All parameters are reset to factory settings (50Hz, 230V/400V or 220V/380V depends on Pr.00.12) |
| | 10 | All parameters are reset to factory settings (60Hz, 115V/220V/440V) |

- When Pr.00.02=1, all parameters are read-only. To write all parameters, set Pr.00.02=0.
- When Pr.00.02=6, it clears all PLC program. But this function is NOT for VFD*E*C models.
- If the parameter setting is “8”, keypad setting is invalid but the setting of communication parameters is valid. Method to relieve: Press “Enter” 5 seconds then set Pr.00.02=0.
- When the parameter settings are abnormal, all parameters can be reset to factory setting by setting Pr.00.02 to 9 or 10.
- When Pr.00.02=9, all parameters are reset to factory setting for 50Hz users and voltage will be different by Pr.00.12 setting.
- When Pr.00.02=10, all parameters are reset to factory setting for 60Hz users.
- Related parameter: Pr.00.12 (50Hz Base Voltage Selection)

**NOTE**

When Pr.00.02=9 or 10, all parameter are reset to factory setting but it doesn’t clear all PLC program.

Only Pr.00.02=6 can clear all PLC program.

## 00.03 ✓Start-up Display Selection

Factory Setting: 0

| | | | |
|---|---|---|---|
| Settings | 0 | Display the frequency command value (Fxxx) | F60.0 |
| | 1 | Display the actual output frequency (Hxxx) | H60.0 |
| | 2 | Display the output current in A supplied to the motor (Axxx) | A 2.0 |
| | 3 | Display the content of user-defined unit (Uxxx) | U 20 |
| | 4 | FWD/REV command | Frd |
| | 5 | PLCx (PLC selections: PLC0/PLC1/PLC2) (NOT for VFD*E*C models) | PLC0 |

- This parameter determines the start-up display page after power is applied to the drive.
- For setting 5, PLC0: disable, PLC1: run PLC, PLC2: read/write PLC programs into AC motor drive.
- Please refer to Pr.00.04 for multi-function display.
- Related parameter: Pr.00.04 (Content of Multi-function Display)

## 00.04 Content of Multi-function Display

Factory Setting: 0

| | | | |
|---|---|---|---|
| Settings | 0 | Display the content of user-defined unit (Uxxx) | U 20 |
| | 1 | Display the counter value which counts the number of pulses on TRG terminal (c) | c 20 |
| | 2 | Display PLC D1043 value (C) (NOT for VFD*E*C models) | C 20 |
| | 3 | Display the actual DC BUS voltage in VDC of the AC motor drive (u) | u 310 |
| | 4 | Display the output voltage in VAC of terminals U/T1, V/T2, W/T3 to the motor (E) | E 220 |
| | 5 | Display PID analog feedback signal value in % (b) | b 0.0 |
| | 6 | Display the power factor angle in º of terminals U/T1, V/T2, W/T3 to the motor (n) | n 90.0 |
| | 7 | Display the output power in kW of terminals U, V and W to the motor (P) | P 0.00 |
| | 8 | Display the estimated value of torque in Nm as it relates to current (t) | t 0.00 |
| | 9 | Display the signal of AVI analog input terminal in V (I) | I 0.0 |
| | 10 | Display the signal of ACI analog input terminal in mA or display the signal of AVI2 analog input terminal in V (i) | i 0.0 |
| | 11 | Display the temperature of IGBT (h) in ˚C | h 30.0 |
| | 12 | Display AVI3/ACI2 level (I.) | I. 0.0 |
| | 13 | Display AVI4/ACI3 level (i.) | i. 0.0 |
| | 14 | Display PG speed in RPM (G) | G 20 |
| | 15 | Display motor number 00~03 (M) | n 02 |
| | 16 | Display F*Pr.00.05 | U. 60 |

- When Pr00.03 is set to 03, the display is according to the setting of Pr00.04.
- When Pr.00.04 is set to 0 or 16, please refer to Pr.00.05 for details.
- Related parameter: Pr.00.05 (User Defined Coefficient K)

**NOTE**

Please refer to Appendix B.8 KPE-LE02 for the 7-segment LED Display of the Digital Keypad.

| **00.05** | ✓User Defined Coefficient K | |
|---|---|---|
| | Settings 0. 1 to 160.0 | Factory Setting: 1.0 |

The coefficient K determines the multiplying factor for the user-defined unit.
When Pr00.04 is set to 0:
User-defined unit (U) = Output frequency (H) * User Defined Coefficient (K)
When Pr00.04 is set to 16:
User-defined unit (U) = Output frequency (F) * User Defined Coefficient (K)
Or PID frequency setting * User Defined Coefficient (K)

Example:
If user wants to use RPM to display the motor speed when 4-polse motor runs at 60Hz. The user can display the motor speed by setting Pr.00.04 to 0. The application is shown as follows. From the formula of motor speed, user-defined unit (U) (RPM) = 60X120/4=1800 (disregard slip). Therefore, User Defined Coefficient K is 30.0.

**NOTE**

$$Formula \quad of \quad motor \quad speed\ n = f \times \frac{120}{P}$$

n: speed (RPM) (revolution per minute)

P: pole number of motor

f: operation frequency (Hz)

| **00.06** | Power Board Software Version |
|---|---|
| Settings | Read Only |
| Display | #.## |

| **00.07** | Control Board Software Version |
|---|---|
| Settings | Read Only |
| Display | #.## |

| **00.08** | Password Input | |
|---|---|---|
| Settings | 0 to 9999 | Factory Setting: 0 |
| Display | 0~2 (times of wrong password) | |

The function of this parameter is to input the password that is set in Pr.00.09. Input the correct password here to enable changing parameters. You are limited to a maximum of 3 attempts. After 3 consecutive failed attempts, a blinking “codE” will show up to force the user to restart the AC motor drive in order to try again to input the correct password.
Related parameter: Pr.00.09 (Password Set)

Password Decode Flow Chart

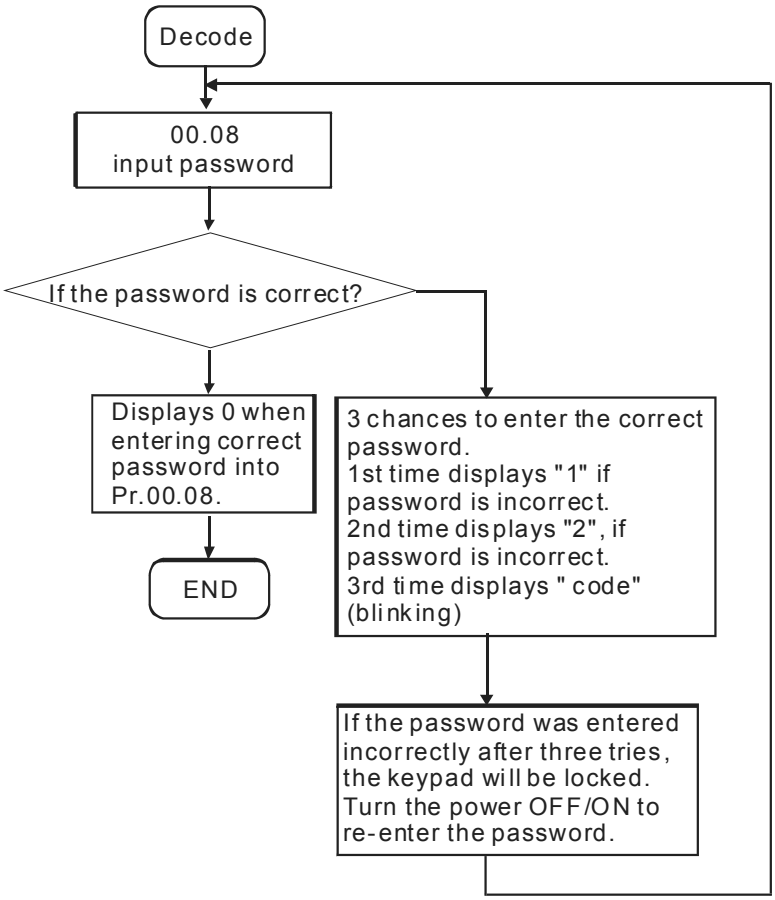


| 00.09 | Password Set | | |
|---|---|---|---|
| | Settings | 0 to 9999 | Factory Setting: 0 |
| | Display | 0 | No password set or successful input in Pr. 00.08 |
| | | 1 | Password has been set |

📖 To set a password to protect your parameter settings.
If the display shows 0, no password is set or password has been correctly entered in Pr.00.08. All parameters can then be changed, including Pr.00.09.
The first time you can set a password directly. After successful setting of password the display will show 1.
Be sure to record the password for later use.
To cancel the parameter lock, set the parameter to 0 after inputting correct password into Pr. 00.08.
The password consists of min. 1 digits and max. 4 digits.

📖 How to make the password valid again after decoding by Pr.00.08:

Method 1: Re-input original password into Pr.00.09 (Or you can enter a new password if you want to use a changed or new one).

Method 2: After rebooting, password function will be recovered.

📖 To lock parameters, you can set Pr.00.02 to 1 or Pr.04.05~04.08 to 17 to prevent changing of parameters settings by unqualified personnel. Please note that it is without password set.

## 00.10 Control Method

Factory Setting: 0

| | | |
|---|---|---|
| Settings | 0 | V/f Control |
| | 1 | Vector Control |

- This parameter determines the control method of the AC motor drive.
- Control of V/f (Voltage/frequency)
  1. To operate by the change of frequency and voltage without changing the mechanical characteristic of motor: it can run by open-loop method and also can use with PG card (refer to Appendix B) to run by close-loop method. In this control, it gets the change of the electromagnetic torque of rotor and the load torque from the change of slip ratio.
  2. The V/f control is the constant value control mode. Although it prevents the main questions of the decreasing frequency and increasing magnetic field, the magnetic field is decreasing with frequency. In such circumstance, insufficient motor torque will occur when the magnetic field weakens in the low frequency. At this moment, it can get the best operation with Pr.07.02 setting(Torque Compensation) to get the torque compensation.
  common applications: pump, conveyor belt, compressor and treadmill
- Vector control:
  1. To operate by the change of frequency and voltage without changing the mechanical characteristic of motor: it can run by open-loop method and also can use with PG card (refer to Appendix B) to run by close-loop method. In this mode, it is coordinate change. The physical essence is the relativity of motion. That means the change of rotor current only has relation with electromagnetic torque and the change of stator current only has relation with electromagnetic torque. This is the characteristic of vector control.
  2.The vector control can eliminate the relation between electromagnetic current vector and armature flux. Thus, it can control the current vector and armature flux independently to raise the transient response of the AC motor drive.
  Applications: textile equipment, press equipment, life equipment and drilling machine.
- Related parameter: Pr.07.02 (Torque Compensation (Motor 0))

## 00.11 Reserved

## 00.12 50Hz Base Voltage Selection

Factory Setting: 0

| | | |
|---|---|---|
| Settings | 0 | 230V/400V |
| | 1 | 220V/380V |

- This parameter determines the base voltage for 50Hz.
- When Pr.00.02 is set to 9, the base voltage for 50Hz will set by Pr.00.12.
- Related parameter: Pr.00.02 (Parameter Reset)

# Group 1: Basic Parameters

| **01.00** | Maximum Output Frequency (Fmax) | Unit: Hz |
|---|---|---|
| Settings | 50.00 to 600.00 Hz<br>(Japanese version: 0.00 to 599.00 Hz ) | Factory Setting: 60.00 |

- This parameter determines the AC motor drive's Maximum Output Frequency. All the AC motor drive frequency command sources (analog inputs 0 to +10V and 4 to 20mA) are scaled to correspond to the output frequency range.
- Please note that output frequency may be not in this setting range due to parameter setting:
  1. Pr.00.10 is set to 0: when enabling Pr.07.03 (Slip Compensation) in V/f mode, it may be not in this setting range.
  2. Pr.00.10 is set to 1: The AC motor drive will auto compensate slip in vector mode, so it also may be not within this setting range.
- Related parameters: 00.10 (Control Method), 04.12(Min AVI Frequency), 04.14(Max AVI Frequency), 04.16(Min ACI Frequency), 04.18(Max ACI Frequency), 04.19(ACI/AVI2 Selection), 04.21(Min AVI2 Frequency), 04.23(Max AVI2 Frequency) and 07.03(Slip Compensation (Used without PG) (Motor 0))

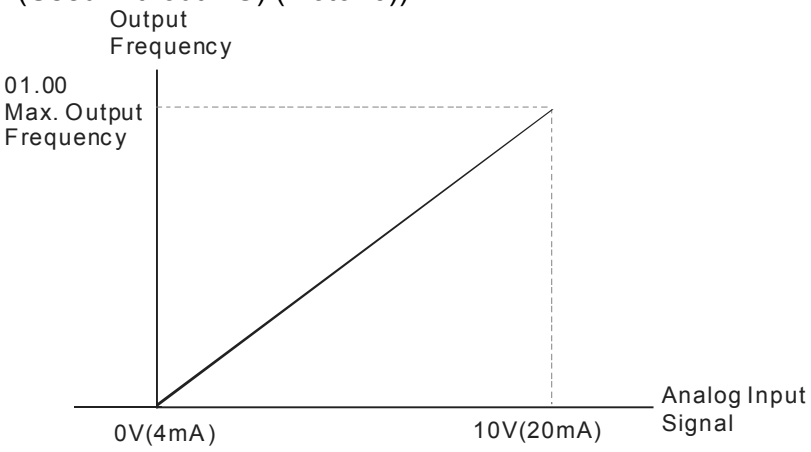


| **01.01** | Maximum Voltage Frequency (Fbase) (Motor 0) | Unit: Hz |
|---|---|---|
| Settings | 0.10 to 600.0Hz<br>(Japanese version: 0.10 to 599.00 Hz ) | Factory Setting: 60.00 |

- This value should be set according to the rated frequency of the motor as indicated on the motor nameplate. Maximum Voltage Frequency determines the v/f curve ratio. For example, if the drive is rated for 460 VAC output and the Maximum Voltage Frequency is set to 60Hz, the drive will maintain a constant ratio of 7.66 V/Hz (460V/60Hz=7.66V/Hz). This parameter value must be equal to or greater than the Mid-Point Frequency (Pr.01.03).
- If this parameter setting is less than the rated frequency of the motor, it may cause over current and damage the motor or trigger the over current protection.
- If this parameter setting is greater than the rated frequency of the motor, it may cause insufficient motor torque.
- Related parameters: Pr.01.02(Maximum Output Voltage (Vmax) (Motor 0)), Pr.01.03(Mid-Point Frequency (Fmid) (Motor 0)), Pr.01.04(Mid-Point Voltage (Vmid) (Motor 0)), Pr.01.05(Minimum Output Frequency (Fmin) (Motor 0)) and Pr.01.06(Minimum Output Voltage (Vmin) (Motor 0)).

| **01.02** | Maximum Output Voltage (Vmax) (Motor 0) | | Unit: V |
|---|---|---|---|
| Settings | 115V/230V series | 0.1 to 255.0V | Factory Setting: 220.0 |
| | 460V series | 0.1 to 510.0V | Factory Setting: 440.0 |

- This parameter determines the Maximum Output Voltage of the AC motor drive. The Maximum Output Voltage setting must be smaller than or equal to the rated voltage of the motor as indicated on the motor nameplate. This parameter value must be equal to or greater than the Mid-Point Voltage (Pr.01.04).
- If the output voltage of the AC motor drive is smaller than this setting, the output voltage can't reach this setting due to input voltage limit.
- If this setting is greater than the rated voltage of the motor, it may cause over current of the motor output to damage motor or trigger the over current protection.
- If this setting is smaller than the rated voltage of the motor, it may cause the insufficient motor torque.
- Related parameters: Pr.01.01(Maximum Voltage Frequency (Fbase) (Motor 0)), Pr.01.03(Mid-Point Frequency (Fmid) (Motor 0)), Pr.01.04(Mid-Point Voltage (Vmid) (Motor 0)), Pr.01.05(Minimum Output Frequency (Fmin) (Motor 0)) and Pr.01.06(Minimum Output Voltage (Vmin) (Motor 0)).

| **01.03** | Mid-Point Frequency (Fmid) (Motor 0) | Unit: Hz |
|---|---|---|
| Settings | 0.10 to 600.00Hz<br>(Japanese version: 0.10 to 599.00 Hz ) | Factory Setting: 1.50 |

- This parameter sets the Mid-Point Frequency of the V/f curve. With this setting, the V/f ratio between Minimum Frequency and Mid-Point frequency can be determined. This parameter must be equal to or greater than Minimum Output Frequency (Pr.01.05) and equal to or less than Maximum Voltage Frequency (Pr.01.01).
- Please note that unsuitable setting may cause over current, it may cause motor overheat and damage motor or trigger the over current protection.
- Please note that unsuitable setting may cause insufficient motor torque.
- When it is vector control, the settings of Pr.01.03, Pr.01.04 and Pr.01.06 are invalid.
- This setting must be greater than Pr.01.05.
- Related parameters: Pr.01.01(Maximum Voltage Frequency (Fbase) (Motor 0)), Pr.01.02(Maximum Output Voltage (Vmax) (Motor 0)), Pr,01.04(Mid-Point Voltage (Vmid) (Motor 0)), Pr.01.05(Minimum Output Frequency (Fmin) (Motor 0)) and Pr.01.06(Minimum Output Voltage (Vmin) (Motor 0)).

| **01.04** | Mid-Point Voltage (Vmid) (Motor 0) | | Unit: V |
|---|---|---|---|
| Settings | 115V/230V series | 0.1 to 255.0V | Factory Setting: 10.0 |
| | 460V series | 0.1 to 510.0V | Factory Setting: 20.0 |

- This parameter sets the Mid-Point Voltage of any V/f curve. With this setting, the V/f ratio between Minimum Frequency and Mid-Point Frequency can be determined.
- This parameter must be equal to or greater than Minimum Output Voltage (Pr.01.06).
- Related parameters: Pr.01.01(Maximum Voltage Frequency (Fbase) (Motor 0)), Pr.01.02(Maximum Output Voltage (Vmax) (Motor 0)), Pr,01.03(Mid-Point Frequency (Fmid) (Motor 0)), Pr.01.05(Minimum Output Frequency (Fmin) (Motor 0)) and Pr.01.06(Minimum Output Voltage (Vmin) (Motor 0)).

| **01.05** | Minimum Output Frequency (Fmin) (Motor 0) | Unit: Hz |
|---|---|---|
| | Settings 0.10 to 600.00Hz<br>(Japanese version: 0.10 to 599.00 Hz ) | Factory Setting: 1.50 |

- This parameter sets the Minimum Output Frequency of the AC motor drive. If the frequency command is greater than this setting, the AC motor drive will accelerate to the frequency command by the accel./decel. time. If the frequency command is less than this setting, the AC motor drive will be ready without output voltage.
- Please note that unsuitable setting may cause over current to damage motor or trigger the over current protection.
- When Pr.08.04 is set to 1(Operation continues after momentary power loss, speed search starts with the Master Frequency reference value.), it won't operate by V/f curve.
- Related parameters: Pr.01.01(Maximum Voltage Frequency (Fbase) (Motor 0)), Pr.01.02(Maximum Output Voltage (Vmax) (Motor 0)), Pr,01.03(Mid-Point Frequency (Fmid) (Motor 0)), Pr.01.04(Mid-Point Voltage (Vmid) (Motor 0)) and Pr.01.06(Minimum Output Voltage (Vmin) (Motor 0))

| **01.06** | Minimum Output Voltage (Vmin) (Motor 0) | | Unit: V |
|---|---|---|---|
| | Settings | 115V/230V series 0.1 to 255.0V | Factory Setting: 10.0 |
| | | 460V series 0.1 to 510.0V | Factory Setting: 20.0 |

- This parameter sets the Minimum Output Voltage of the AC motor drive.
- If the setting is too large, it may cause over current to damage motor or trigger the over current protection.
- If the setting is too small, it may cause insufficient motor torque.
- The settings of Pr.01.01 to Pr.01.06 have to meet the condition of Pr.01.02 ≥ Pr.01.04 ≥ Pr.01.06 and Pr.01.01 ≥ Pr.01.03 ≥ Pr.01.05. By this condition, V/f curve is shown in the following figure.
- In vector control mode (Pr.00.10 is set to 1), Pr.01.03, Pr.01.04 and Pr.01.06 are disabled. But Pr.01.05 is still the minimum output frequency.
- The V/f curve of motor 0 to motor 3 can be selected by setting the multi-function input terminals MI3~MI6 (Pr.04.05 to Pr.04.08) to 27 and 28. To set the voltage and frequency for each motor, please refer to Pr.01.01~01.06 for motor 0 (factory setting), Pr.01.26~01.31 for motor 1, Pr.01.32~01.37 for motor 2 and Pr.01.38~01.43 for motor 3.
- Related parameters: Pr.01.01(Maximum Voltage Frequency (Fbase) (Motor 0)), Pr.01.02(Maximum Output Voltage (Vmax) (Motor 0)), Pr,01.03(Mid-Point Frequency (Fmid) (Motor 0)), Pr.01.04(Mid-Point Voltage (Vmid) (Motor 0)) and Pr.01.05 (Minimum Output Frequency (Fmin) (Motor 0)).

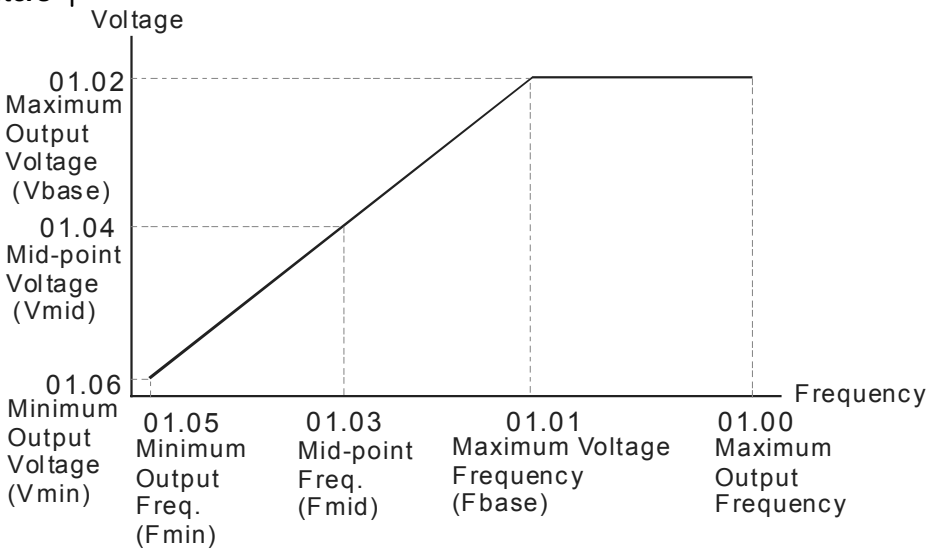


**V/f Curve**

| **01.07** | Output Frequency Upper Limit | Unit: % |
|---|---|---|
| | Settings 0.1 to 120.0% | Factory Setting: 110.0 |

- This parameter must be equal to or greater than the Output Frequency Lower Limit (Pr.01.08). The Maximum Output Frequency (Pr.01.00) is regarded as 100%.
- Output Frequency Upper Limit value = (Pr.01.00 * Pr.01.07)/100.
- The max. output frequency of the AC motor drive will be limited by this setting. If the setting of frequency command is greater than Pr.01.07, the output frequency will be equal to or less than Pr.01.07.
- When enabling Pr.07.03 or Pr.10.00~10.13, the output frequency of the AC motor drive may exceed the frequency command but it is still limited by this setting.
- Related parameters: Pr.01.00(Maximum Output Frequency (Fmax)) and Pr.01.08(Output Frequency Lower Limit).

| **01.08** | Output Frequency Lower Limit | Unit: % |
|---|---|---|
| | Settings 0.0 to 100.0% | Factory Setting: 0.0 |

- The Output Frequency Lower Limit value = (Pr.01.00 * Pr.01.08) /100.
- This setting will limit the min. output frequency of the AC motor drive. When the frequency command of the AC motor drive or the frequency calculated by feedback control is less than this setting, the output frequency of the AC motor drive will be limited by this setting.
- After starting running, the AC motor drive will accelerate from Pr.01.05 (Minimum Output Frequency (Fmin) (Motor 0)) to the setting frequency by V/f curve and won't be limited by this setting.
- The Upper/Lower Limits are to prevent operation errors and machine damage.
- If the Output Frequency Upper Limit is 50Hz and the Maximum Output Frequency is 60Hz, the Output Frequency will be limited to 50Hz.
- If the Output Frequency Lower Limit is 10Hz, and the Minimum Output Frequency (Pr.01.05) is set to 1.0Hz, then any Command Frequency between 1.0-10Hz will generate a 10Hz output from the drive. If the command frequency is less than 1.0Hz, drive will be in ready status without output.
- This parameter must be equal to or less than the Output Frequency Upper Limit (Pr.01.07).

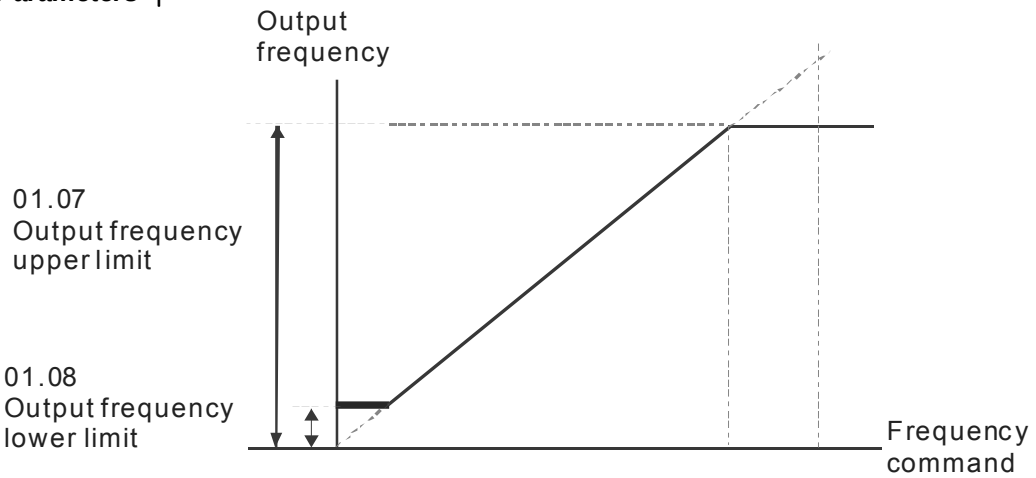


| | | |
|---|---|---|
| **01.09** | ✓Acceleration Time 1 (Taccel 1) | Unit: second |
| **01.10** | ✓Deceleration Time 1 (Tdecel 1) | Unit: second |
| **01.11** | ✓Acceleration Time 2 (Taccel 2) | Unit: second |
| **01.12** | ✓Deceleration Time 2 (Tdecel 2) | Unit: second |
| | Settings 0.1 to 600.0 sec / 0.01 to 600.0 sec | Factory Setting: 10.0 |

- Acceleration/deceleration time 1 or 2 can be switched by setting the external terminals MI3~MI12(MI7~MI12 are optional) to 7 (set Pr.04.05~Pr.04.08 to 7 or Pr.11.06~Pr.11.11 to 7). The factory settings are acceleration time 1.
- The Acceleration Time is used to determine the time required for the AC motor drive to ramp from 0 Hz to Maximum Output Frequency (Pr.01.00). The Deceleration Time is used to determine the time required for the AC motor drive to decelerate from the Maximum Output Frequency (Pr.01.00) down to 0 Hz.
- If the setting of the acceleration/deceleration time is too short, it may trigger the protection (Pr.06.01(Over-Current Stall Prevention during Accel) or Pr.06.00(Over-Voltage Stall Prevention)) and make the actual acceleration/deceleration time be larger than this setting.
- If the setting of the acceleration time is too short, it may cause over-current during acceleration and damage the motor or trigger the protection function.
- If the setting of the deceleration time is too short, it may cause over-current during deceleration or over voltage of the AC motor drive and damage the motor or trigger the protection function.
- It can use suitable brake resistor to decelerate the AC motor drive in short time and prevent internal over voltage. Refer to Appendix B for brake resistor.
- When enabling Pr.01.17(Acceleration S-Curve) and Pr.01.18(Deceleration S-Curve), the actual acceleration/deceleration time will be longer than the setting.
- Related parameters: Pr.01.16(Auto acceleration / deceleration (refer to Accel/Decel time setting)), Pr.01.17(Acceleration S-Curve), Pr.01.18(Deceleration S-Curve), Pr.04.05(Multi-function Input Terminal (MI3)), Pr.04.06(Multi-function Input Terminal (MI4)), Pr.04.07(Multi-function Input Terminal (MI5)) and Pr.04.08(Multi-function Input Terminal (MI6))

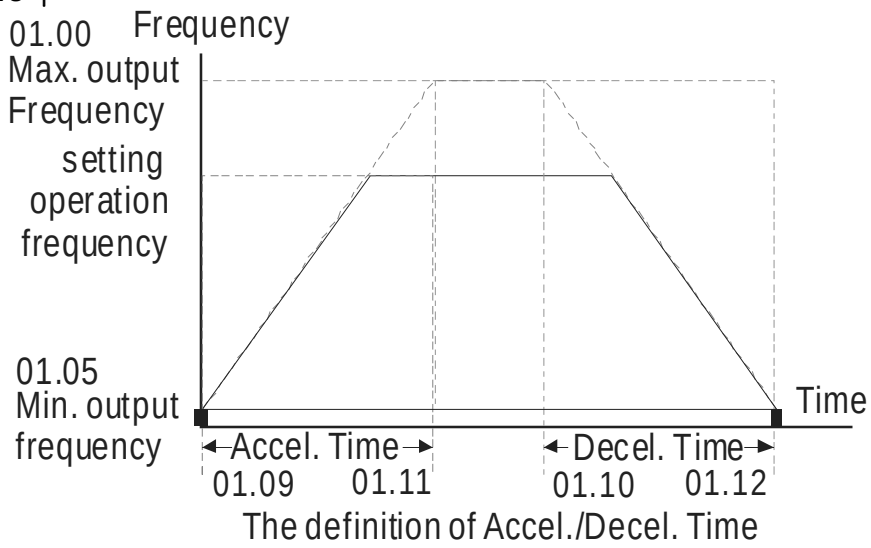

The definition of Accel./Decel. Time

| 01.19 | Accel/Decel Time Unit |
|---|---|

Factory Setting: 0

| | | |
|---|---|---|
| Settings | 0 | Unit: 0.1 sec |
| | 1 | Unit: 0.01 sec |

- The Acceleration/Deceleration Time 1, 2, 3, 4 are selected according to the Multi-function Input Terminals Settings. See Pr.04.05 to Pr.04.08 for more details.
- In the diagram shown below, the Acceleration/Deceleration Time of the AC motor drive is the time between 0 Hz to Maximum Output Frequency (Pr.01.00). Suppose the Maximum Output Frequency is 60 Hz, Minimum Output Frequency (Pr.01.05) is 1.0 Hz, and Acceleration/Deceleration Time is 10 seconds. The actual time for the AC motor drive to accelerate from start-up to 60 Hz and to decelerate from 60Hz to 1.0Hz is in this case 9.83 seconds. ((60-1) * 10/60=9.83secs).

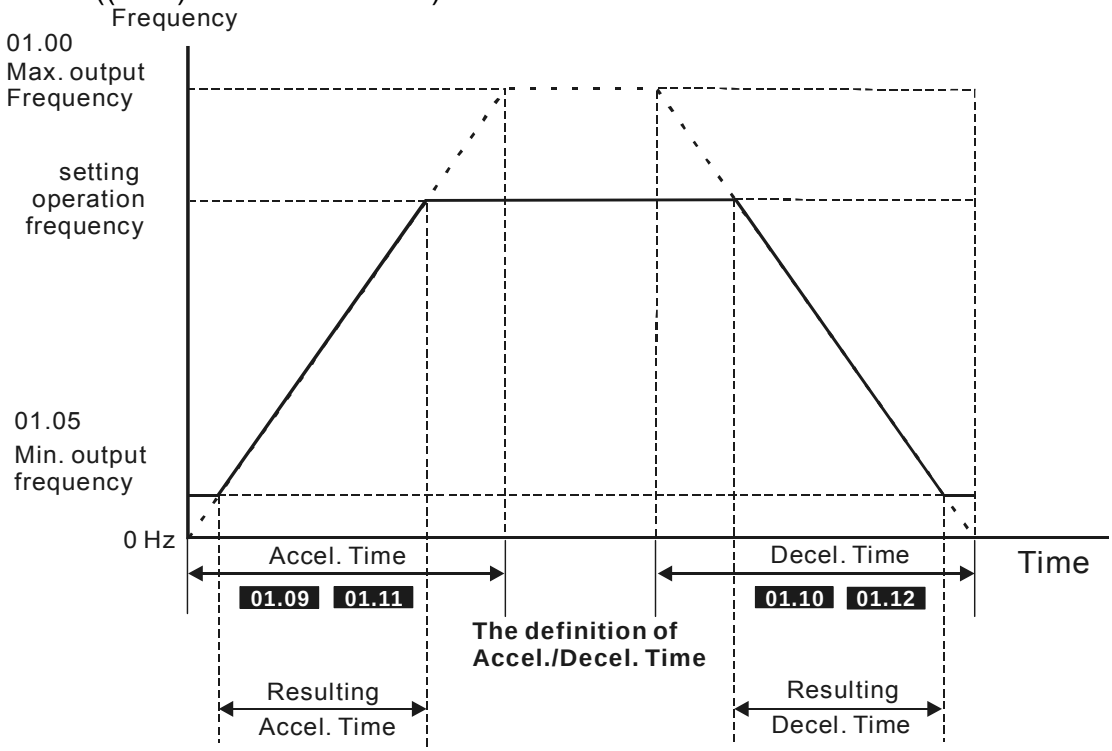

Resulting Accel./Decel. Time

| 01.13 | ✓Jog Acceleration Time | Unit: second |
|---|---|---|
| Settings | 0.1 to 600.0/0.01 to 600.0 sec | Factory Setting: 1.0 |

| 01.14 | ✓Jog Deceleration Time | Unit: second |
|---|---|---|
| Settings | 0.1 to 600.0/0.01 to 600.0 sec | Factory Setting: 1.0 |

| 01.15 | ✓Jog Frequency | Unit: Hz |
|---|---|---|
| Settings | 0.10 to 600.00Hz<br>(Japanese version: 0.10 to 599.00 Hz ) | Factory Setting: 6.00 |

- Only external terminal JOG (MI3 to MI12) can be used. Please set one of MI3~MI12 (MI7~MI12 are optional) to 8 for JOG operation. When the Jog command is "ON", the AC motor drive will accelerate from Minimum Output Frequency (Pr.01.05) to Jog Frequency (Pr.01.15). When the Jog command is "OFF", the AC motor drive will decelerate from Jog Frequency to zero.
- The used Accel/Decel time is set by the Jog Accel/Decel time (Pr.01.13, Pr.01.14).
- Before using the JOG command, the drive must be stopped first. And during Jog operation, other operation commands are not accepted, except commands via the FORWARD, REVERSE and STOP keys on the digital keypad.

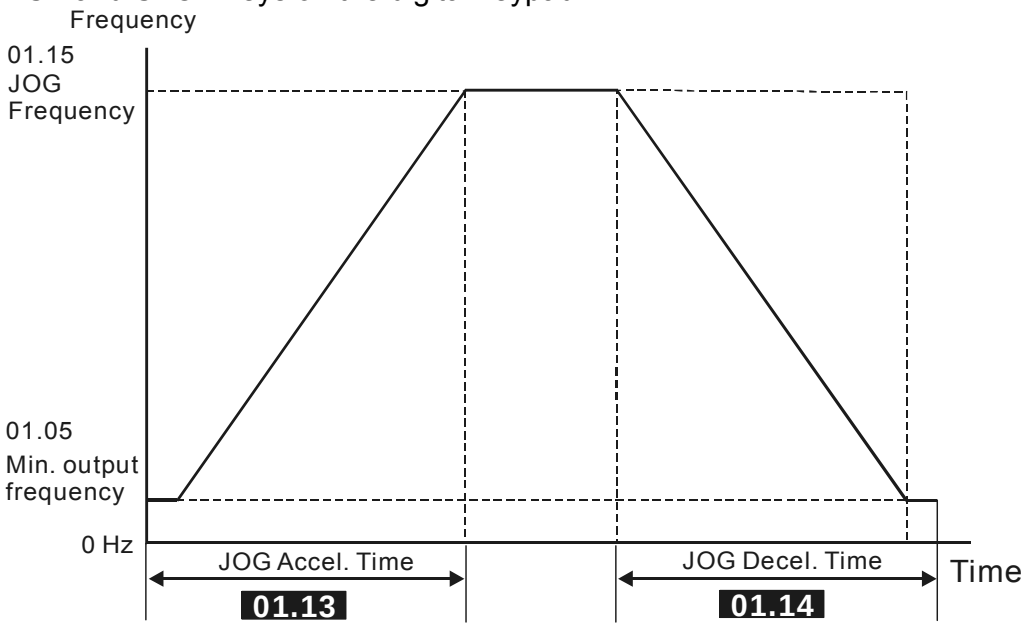


**The definition of JOG Accel./Decel. Time**

| 01.16 | ✓Auto-Acceleration / Deceleration |
|---|---|

Factory Setting: 0

| Settings | | |
|---|---|---|
| | 0 | Linear acceleration / deceleration |
| | 1 | Auto acceleration, linear Deceleration. |
| | 2 | Linear acceleration, auto Deceleration. |
| | 3 | Auto acceleration / deceleration (set by load) |
| | 4 | Auto acceleration / deceleration (set by Accel/Decel Time setting) |
| | 5 | Linear Accel. controlled by current, linear Decel. |
| | 6 | Linear Accel. controlled by current, auto Decel. |

- Linear acceleration/deceleration: the acceleration/deceleration that acts according to the acceleration/deceleration time set by Pr.01.09~01.12.

- With Auto acceleration / deceleration it is possible to reduce vibration and shocks during starting/stopping the load.
- When Pr.01.16 is set to 3 Auto acceleration / deceleration (set by load):
  During Auto acceleration the torque is automatically measured and the drive will accelerate to the set frequency with the fastest acceleration time and the smoothest starting current.
  During Auto deceleration, regenerative energy is measured and the motor is smoothly stopped with the fastest deceleration time.
- When this parameter is set to 4 Auto acceleration / deceleration (set by Accel/Decel Time setting): the actual accel/decel time will be equal to or more than parameter Pr.01.09 ~Pr.01.12.
- When this parameter is set to 5(Linear Accel. controlled by current, linear Decel.)/6(Linear Accel. controlled by current, auto Decel.): the current value when the drive performs over-current stall prevention can be kept within the setting of stall prevention level. For example, if the setting of stall prevention level is 100%, it will perform deceleration as the current exceeds 100% during operation and keep the current around 100%. Besides, it will perform deceleration no matter over-current occurs during deceleration or constant speed. (The present over-current stall prevention during acceleration is used to keep the output frequency and prevent from the drive overload (OL).
- When this parameter is set to 5(Linear Accel. controlled by current, linear Decel.): the drive will perform the linear deceleration by the setting of deceleration time. When this parameter is set to 6 (Linear Accel. controlled by current, auto Decel.), the drive stop the motor by the fastest deceleration time after auto-distinguish load regenerative energy.

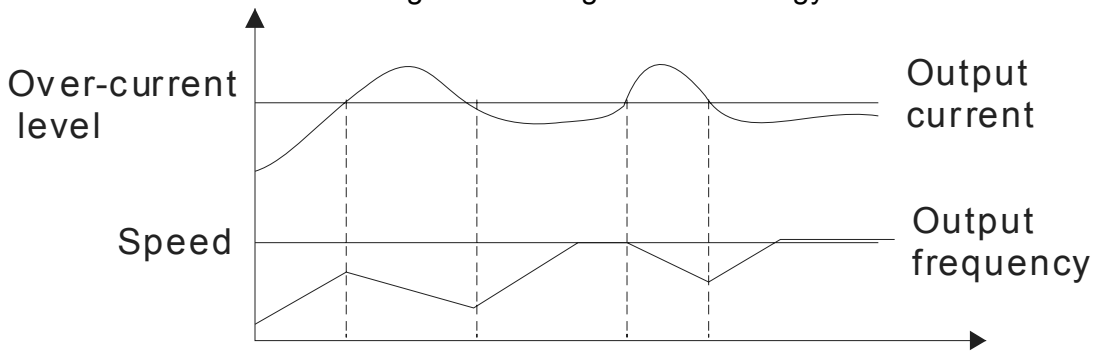


- Auto acceleration/deceleration makes the complicated processes of tuning unnecessary. It makes operation efficient and saves energy by acceleration without stall and deceleration without brake resistor.
- In applications with brake resistor or brake unit, the deceleration time is the shortest. It is NOT recommended to use Auto deceleration function, or it will extend the deceleration time.
- Related parameters: Pr.01.09(Accel Time 1), Pr.01.10(Decel Time 1), Pr.01.11(Accel Time 2) and Pr.01.12(Decel Time 2).

| | | |
|---|---|---|
| **01.17** | Acceleration S-Curve | Unit: second |
| **01.18** | Deceleration S-Curve | Unit: second |

Factory Setting: 0.0/0.00

| | | |
|---|---|---|
| Settings | 0.0 | S-curve disabled |
| | 0.1 to 10.0/0.01 to 10.00 | S-curve enabled (10.0/10.00 is the smoothest) |

- This parameter is used to ensure smooth acceleration and deceleration via S-curve.
  The S-curve is disabled when set to 0.0 and enabled when set to 0.1 to 10.0/0.01 to 10.00.
  Setting 0.1/0.01 gives the quickest and setting 10.0/10.00 the longest and smoothest S-curve.
  The AC motor drive will not follow the Accel/Decel Times in Pr.01.09 to Pr.01.12.
- The diagram below shows that the original setting of the Accel/Decel Time is only for reference when the S-curve is enabled. The actual Accel/Decel Time depends on the selected S-curve (0.1 to 10.0).

The total Accel. Time=Pr.01.09 + Pr.01.17 or Pr.01.11 + Pr.01.17
The total Decel. Time=Pr.01.10 + Pr.01.18 or Pr.01.12 + Pr.01.18

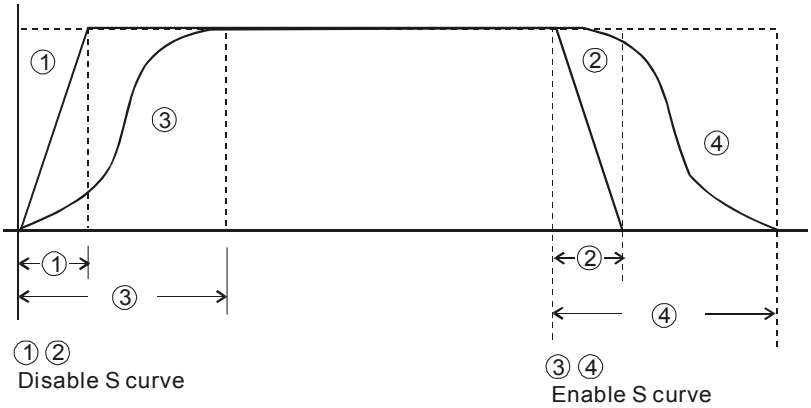


**Acceleration/deceleration Characteristics**

📖 Related parameters: Pr.01.09(Accel Time 1), Pr.01.10(Decel Time 1), Pr.01.11(Accel Time 2) and Pr.01.12(Decel Time 2).

| | | |
|---|---|---|
| **01.20** | Delay Time at 0Hz for Simple Position | Unit: second |
| **01.21** | Delay Time at 10Hz for Simple Position | Unit: second |
| **01.22** | Delay Time at 20Hz for Simple Position | Unit: second |
| **01.23** | Delay Time at 30Hz for Simple Position | Unit: second |
| **01.24** | Delay Time at 40Hz for Simple Position | Unit: second |
| **01.25** | Delay Time at 50Hz for Simple Position | Unit: second |
| | Settings 0.00 to 600.00 sec | Factory Setting: 0.00 |

📖 This simple position function is calculated by the measure of operation distance. When the multi-function input terminal is set to 25 and it is ON, it will start to decelerate after getting the delay time from Pr.01.20 to Pr.01.25 and get the final position.

📖 This is simple position function NOT the precision position function.

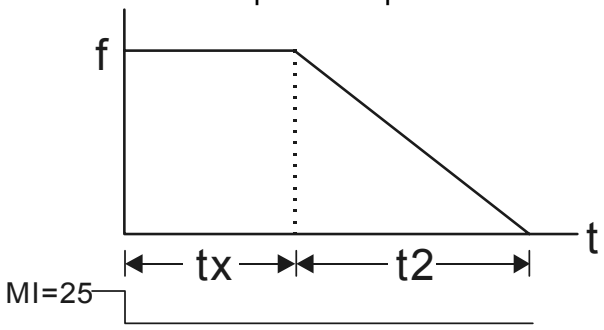


$$S = n \times \left( \frac{t_x + (t_x + t_2)}{2} \right) \qquad n = f \times \frac{120}{p}$$

S: operation distance
n: rotation speed(revolution/second)
tx: delay time (sec)
t2: deceleration time(sec)

n: rotation speed(revolution/second)
P: pole number of motor
f: operation frequency

Assume that the radius of the 4-pole motor is r and rotation speed is n (rpm).

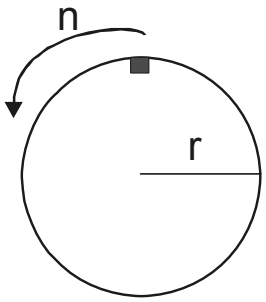


Example 1:

Assume that motor speed is 50Hz, the delay time at 50Hz is 2 sec (Pr.01.25=2) and the deceleration time from 50Hz to 0Hz is 10 seconds.

The rotation speed n = 120 X 50 /4 (rpm/min) = 25 rpm/sec

The revolution numbers = (25 X (2+12))/2 = 175 (revolutions)

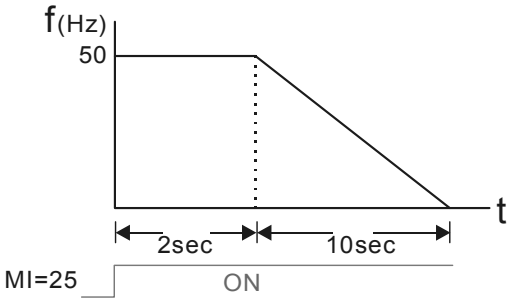


Therefore, the distance = revolution numbers X circumference = 175 X 2π r

It also means that the motor will stop to the original position after 175 circles.

Example 2:

Assume that motor speed is 1.5Hz, the delay time at 10Hz is 10 sec (Pr.01.21=10) and the deceleration time from 60Hz to 0Hz is 40 seconds.

The delay time at 1.5Hz is 1.5 sec and the deceleration from 1.5Hz to 0Hz is 1 sec.

The rotation speed n = 120 X 1.5 /4 (rpm/min) = 1.5/2 rpm/sec = 0.75 rpm/sec

The revolution numbers = (1.5/2X (1.5+2.5))/2 = 1.5 (revolutions)

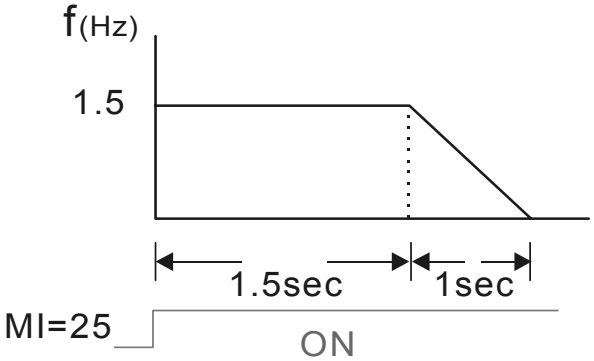


Therefore, the distance = revolution numbers X circumference = 1.5 X 2π r

It also means that the motor will stop after running 1.5 circles.

| **01.26** | Maximum Voltage Frequency (Fbase) (Motor 1) | Unit: Hz |
|---|---|---|
| Settings | 0.10 to 600.0Hz<br>(Japanese version: 0.10 to 599.00 Hz ) | Factory Setting: 60.00 |

| **01.27** | Maximum Output Voltage (Vmax) (Motor 1) | Unit: V |
|---|---|---|
| Settings | 115V/230V series 0.1 to 255.0V | Factory Setting: 220.0 |

| | | | |
|---|---|---|---|
| | 460V series | 0.1 to 510.0V | Factory Setting: 440.0 |

| | | |
|---|---|---|
| **01.28** | Mid-Point Frequency (Fmid) (Motor 1) | Unit: Hz |

| | | | |
|---|---|---|---|
| Settings | 0.10 to 600.00Hz<br>(Japanese version: 0.10 to 599.00 Hz ) | | Factory Setting: 1.50 |

| | | |
|---|---|---|
| **01.29** | Mid-Point Voltage (Vmid) (Motor 1) | Unit: V |

| | | | |
|---|---|---|---|
| Settings | 115V/230V series | 0.1 to 255.0V | Factory Setting: 10.0 |
| | 460V series | 0.1 to 510.0V | Factory Setting: 20.0 |

| | | |
|---|---|---|
| **01.30** | Minimum Output Frequency (Fmin) (Motor 1) | Unit: Hz |

| | | | |
|---|---|---|---|
| Settings | 0.10 to 600.00Hz<br>(Japanese version: 0.10 to 599.00 Hz ) | | Factory Setting: 1.50 |

| | | |
|---|---|---|
| **01.31** | Minimum Output Voltage (Vmin) (Motor 1) | Unit: V |

| | | | |
|---|---|---|---|
| Settings | 115V/230V series | 0.1 to 255.0V | Factory Setting: 10.0 |
| | 460V series | 0.1 to 510.0V | Factory Setting: 20.0 |

| | | |
|---|---|---|
| **01.32** | Maximum Voltage Frequency (Fbase) (Motor 2) | Unit: Hz |

| | | |
|---|---|---|
| Settings | 0.10 to 600.0Hz<br>(Japanese version: 0.10 to 599.00 Hz ) | Factory Setting: 60.00 |

| | | |
|---|---|---|
| **01.33** | Maximum Output Voltage (Vmax) (Motor 2) | Unit: V |

| | | | |
|---|---|---|---|
| Settings | 115V/230V series | 0.1 to 255.0V | Factory Setting: 220.0 |
| | 460V series | 0.1 to 510.0V | Factory Setting: 440.0 |

| | | |
|---|---|---|
| **01.34** | Mid-Point Frequency (Fmid) (Motor 2) | Unit: Hz |

| | | | |
|---|---|---|---|
| Settings | 0.10 to 600.00Hz<br>(Japanese version: 0.10 to 599.00 Hz ) | | Factory Setting: 1.50 |

| | | |
|---|---|---|
| **01.35** | Mid-Point Voltage (Vmid) (Motor 2) | Unit: V |

| | | | |
|---|---|---|---|
| Settings | 115V/230V series | 0.1 to 255.0V | Factory Setting: 10.0 |
| | 460V series | 0.1 to 510.0V | Factory Setting: 20.0 |

| | | |
|---|---|---|
| **01.36** | Minimum Output Frequency (Fmin) (Motor 2) | Unit: Hz |

| | | | |
|---|---|---|---|
| Settings | 0.10 to 600.00Hz<br>(Japanese version: 0.10 to 599.00 Hz ) | | Factory Setting: 1.50 |

| | | |
|---|---|---|
| **01.37** | Minimum Output Voltage (Vmin) (Motor 2) | Unit: V |

| | | | |
|---|---|---|---|
| Settings | 115V/230V series | 0.1 to 255.0V | Factory Setting: 10.0 |
| | 460V series | 0.1 to 510.0V | Factory Setting: 20.0 |

| | | |
|---|---|---|
| **01.38** | Maximum Voltage Frequency (Fbase) (Motor 3) | Unit: Hz |

| | | |
|---|---|---|
| Settings | 0.10 to 600.0Hz | Factory Setting: 60.00 |

| | | |
|---|---|---|
| **01.39** | Maximum Output Voltage (Vmax) (Motor 3) | Unit: V |

| | | | |
|---|---|---|---|
| Settings | 115V/230V series | 0.1 to 255.0V | Factory Setting: 220.0 |
| | 460V series | 0.1 to 510.0V | Factory Setting: 440.0 |

| 01.40 | Mid-Point Frequency (Fmid) (Motor 3) | Unit: Hz |
|---|---|---|
| Settings | 0.10 to 600.00Hz<br>(Japanese version: 0.10 to 599.00 Hz ) | Factory Setting: 1.50 |

| 01.41 | Mid-Point Voltage (Vmid) (Motor 3) | | Unit: V |
|---|---|---|---|
| Settings | 115V/230V series | 0.1 to 255.0V | Factory Setting: 10.0 |
| | 460V series | 0.1 to 510.0V | Factory Setting: 20.0 |

| 01.42 | Minimum Output Frequency (Fmin) (Motor 3) | Unit: Hz |
|---|---|---|
| Settings | 0.10 to 600.00Hz<br>(Japanese version: 0.10 to 599.00 Hz ) | Factory Setting: 1.50 |

| 01.43 | Minimum Output Voltage (Vmin) (Motor 3) | | Unit: V |
|---|---|---|---|
| Settings | 115V/230V series | 0.1 to 255.0V | Factory Setting: 10.0 |
| | 460V series | 0.1 to 510.0V | Factory Setting: 20.0 |

📖 The V/f curve of motor 0 to motor 3 can be selected by setting the multi-function input terminals MI3~MI6 (Pr.04.05 to Pr.04.08) to 27 and 28. To set the voltage and frequency for each motor, please refer to Pr.01.01~01.06 for motor 0 (factory setting), Pr.01.26~01.31 for motor 1, Pr.01.32~01.37 for motor 2 and Pr.01.38~01.43 for motor 3.

📖 Related parameters: Pr.04.05(Multi-function Input Terminal (MI3)), Pr.04.06(Multi-function Input Terminal (MI4)), Pr.04.07(Multi-function Input Terminal (MI5)) and Pr.04.08(Multi-function Input Terminal (MI6))

# Group 2: Operation Method Parameters

| **02.00** | ✓Source of First Master Frequency Command |
|---|---|

Factory Setting: 1

| **02.09** | ✓Source of Second Master Frequency Command |
|---|---|

Factory Setting: 0

| | | |
|---|---|---|
| Settings | 0 | Digital keypad UP/DOWN keys or Multi-function Inputs UP/DOWN. Last used frequency saved. (Digital keypad is optional) |
| | 1 | 0 to +10V from AVI |
| | 2 | 4 to 20mA from ACI or 0 to +10V from AVI2 |
| | 3 | RS-485 (RJ-45)/USB communication |
| | 4 | Digital keypad potentiometer |

- These parameters set the Master Frequency Command Source of the AC motor drive.
- The factory setting for master frequency command is 1. (digital keypad is optional, please refer to Appendix B for details.)
- Setting 2: use the ACI/AVI switch on the AC motor drive to select ACI or AVI2. When setting to AVI, AVI2 is indicated. Please note the ACI/AVI switch on the AC motor drive. Switch to ACI for 4 to 20mA analog current signal (ACI) (Pr.04.19 should be set to 0) and AVI for analog voltage signal (AVI2) (Pr.04.19 should be set to 1).
- When the 3rd switch on the upper-right corner is set to be ON as shown in the following diagram, the source of first master frequency command (Pr.02.00) will force setting to 2. This setting(Pr.02.00) can't be changed till the 3rd switch is set to be OFF.

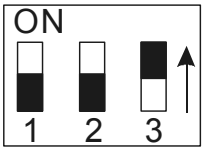


- When the AC motor drive is controlled by external terminal, please refer to Pr.02.05 for details.
- PR.02.09 is only valid when one of Pr.04.05~04.08 is set to 22. When setting 22 is activated, the source of the frequency command is the setting of Pr.02.09. The factory setting of the source of frequency command is the first frequency command. Only one of the source of first master frequency command and second master frequency command can be enable at one time.
- Related parameters: Pr.04.05(Multi-function Input Terminal (MI3)), Pr.04.06(Multi-function Input Terminal (MI4)), Pr.04.07(Multi-function Input Terminal (MI5)), Pr.04.08(Multi-function Input Terminal (MI6)) and Pr.04.19 (ACI/AVI2 Selection)

| **02.01** | ✓Source of First Operation Command |
|---|---|

Factory Setting: 1

| | | |
|---|---|---|
| Settings | 0 | Digital keypad (Digital keypad is optional) |
| | 1 | External terminals. Keypad STOP/RESET enabled. |
| | 2 | External terminals. Keypad STOP/RESET disabled. |
| | 3 | RS-485 (RJ-45)/USB communication. Keypad STOP/RESET enabled. |
| | 4 | RS-485 (RJ-45)/USB communication. Keypad STOP/RESET disabled. |

- The factory setting for source of first operation command is 1. (digital keypad is optional.)

🕮 When the AC motor drive is controlled by external terminal, please refer to Pr.02.05/Pr.04.04 for details.

| **02.10** | ✓Combination of the First and Second Master Frequency Command |
|---|---|

Factory Setting: 0

| | | |
|---|---|---|
| Settings | 0 | First Master Frequency Command Only |
| | 1 | First Master Frequency + Second Master Frequency |
| | 2 | First Master Frequency - Second Master Frequency |

🕮 It can be used to add or subtract the first frequency set in Pr.02.00 and the second frequency set in Pr.02.09 to meet the customers' application. For example, if the master frequency is the first frequency, speed source, controlled by ACI (DC 4~20mA) and the second frequency, press source, is controlled by AVI(DC 0~+10V). These two frequencies can be added or subtracted by Pr.02.10.

🕮 Related parameters: Pr.02.00(Source of First Master Frequency Command) and Pr.02.09(Source of Second Frequency Command ).

| **02.02** | Stop Method |
|---|---|

Factory Setting: 0

| | | | |
|---|---|---|---|
| Settings | 0 | STOP: ramp to stop | E.F.: coast to stop |
| | 1 | STOP: coast to stop | E.F.: coast to stop |
| | 2 | STOP: ramp to stop | E.F.: ramp to stop |
| | 3 | STOP: coast to stop | E.F.: ramp to stop |

🕮 When the 2nd switch on the upper-right corner is set to be ON as shown in the following diagram, the motor stop method (Pr.02.02) will force setting to 1. This setting (Pr.02.02) can't be changed till the 2nd switch is set to be OFF.

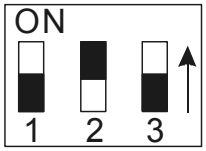


🕮 E.F. is external fault. It can be triggered by setting one of Pr.04.05~04.08 to 14. When the AC motor drive receives the trigger, it will stop output immediately and display EF on the keypad. The motor won't run till the fault is cleared (enter "RESET).

🕮 The parameter determines how the motor is stopped when the AC motor drive receives a valid stop command or detects External Fault.

Ramp: the AC motor drive decelerates to Minimum Output Frequency (Pr.01.05) according to the deceleration time(Pr.01.10 and Pr.01.12) and then stops.

Coast: the AC motor drive stops the output instantly upon command, and the motor free runs until it comes to a complete standstill.

The motor stop method is usually determined by the characteristics of the motor load and how frequently it is stopped.

(1) It is recommended to use “ramp to stop” for safety of personnel or to prevent material from being wasted in applications where the motor has to stop after the drive is stopped. The deceleration time has to be set accordingly.

(2) If motor free running is allowed or the load inertia is large, it is recommended to select “coast to stop”. For example: blowers, punching machines, centrifuges and pumps.

📖 Related parameters: Pr.01.10(Decel Time 1), Pr.01.12(Decel Time 2), Pr.04.05(Multi-function Input Terminal (MI3)), Pr.04.06(Multi-function Input Terminal (MI4)), Pr. 04.07(Multi-function Input Terminal (MI5)) and Pr.04.08(Multi-function Input Terminal (MI6))

**NOTE**

The digital keypad is optional. Please refer to Appendix B for details. When using without this optional keypad, the FAULT LED will be ON once there is error messages or warning messages from the external terminals.

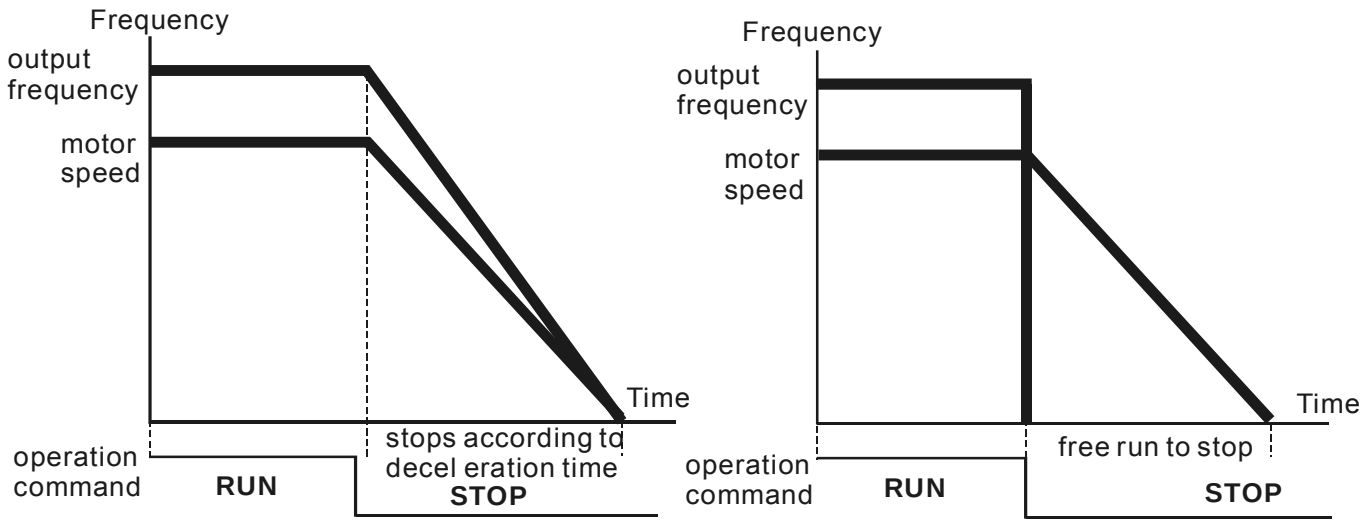


**ramp to stop and free run to stop**

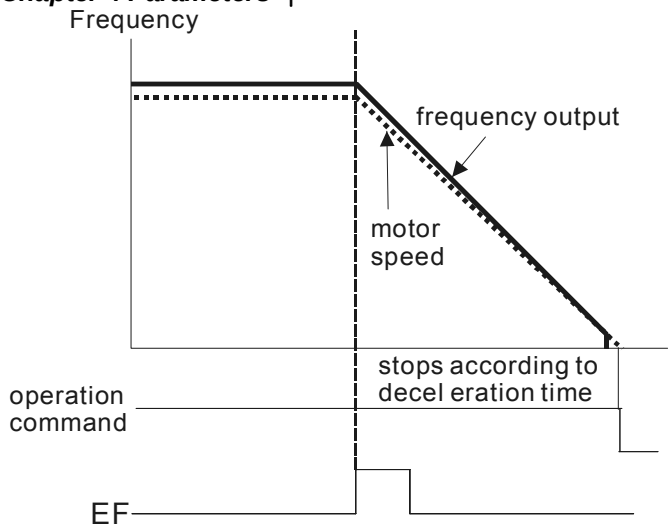


When Pr.02.02 is set to 2 or 3

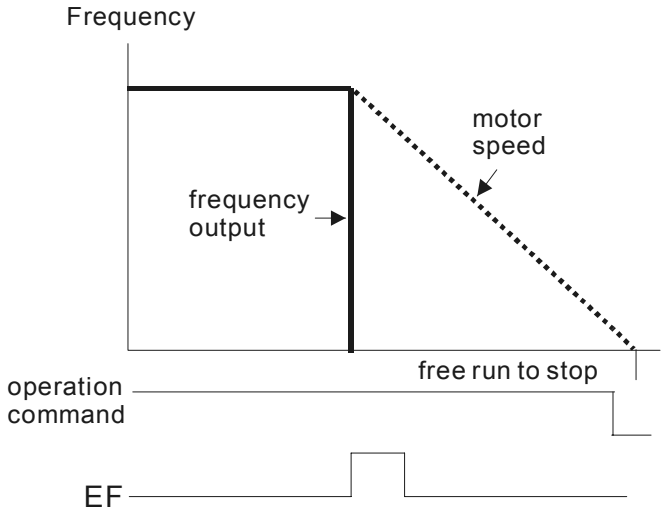


When Pr.02.02 is set to 0 or 1

| 02.03 | PWM Carrier Frequency Selections | Unit: Hz |
|---|---|---|

| 115V/230V/460V Series | |
|---|---|
| Power | 0.25 to 15hp (0.2kW to 22kW) |
| Setting Range | 1 to 15 kHz |
| Factory Setting | 8 kHz |

This parameter determines the PWM carrier frequency of the AC motor drive.

| Carrier Frequency | Acoustic Noise | Electromagnetic Noise or leakage current | Heat Dissipation | Current Wave |
|---|---|---|---|---|
| 1kHz | Significant | Minimal | Minimal | Minimal |
| 8kHz | | | | |
| 15kHz | Minimal | Significant | Significant | Significant |

From the table, we see that the PWM carrier frequency has a significant influence on the electromagnetic noise, AC motor drive heat dissipation, and motor acoustic noise.

The PWM carrier frequency will be decreased automatically by heat sink temperature and output current of the AC motor drive. It is used as a necessary precaution to prevent the AC motor drive from overheating and thus extends IGBT's life. If the user wants to fix carrier within the rated range and won't change by the change of the surrounding temperature and frequently load. Please refer to Pr.02.18 for Selection of Carrier Modulation.

Related parameters: Pr.02.18(Selection of Carrier Modulation) and Pr.03.08(Fan Control).

## 02.04 Motor Direction Control

Factory Setting: 0

Settings 0 Forward/Reverse operation enabled

1 Reverse operation disabled

2 Forward operation disabled

This parameter is used to disable one direction of rotation of the AC motor drive direction of rotation to prevent damage due to operation errors.

The motor direction also can be limited by setting one of Pr.04.05~04.08 to 21.

Related parameters: Pr.04.05(Multi-function Input Terminal (MI3)), Pr.04.06(Multi-function Input Terminal (MI4)), Pr. 04.07(Multi-function Input Terminal (MI5)) and Pr.04.08(Multi-function Input Terminal (MI6))

Rotating direction of the motor

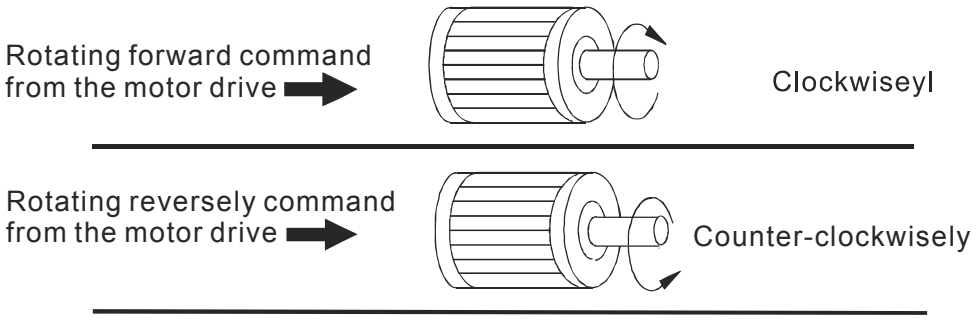


## 02.05 The source of Power-On command and Running command modifies the operating control of the VFD

Settings Factory Setting: 1

0: Start running when Power is on.

1: Don't run when Power is on

2: When the source of the command changes, VFD's operation remains the same.

3: When the source of the command changes, VFD's operation follows the new command.

4: The motor drive can start to run at power on or after reset.

When the source of command is a 2-wire external terminal, the operating command changes as the external terminal's status changes.

This parameter determines the response of the drive upon power on and operation command source is changed.

| Pr.02.05 | Start lockout (Run when power is ON) | Operation status when operation command source is changed |
|---|---|---|
| 0 | Disable (AC motor drive will run) | Keep previous status |
| 1 | Enable (AC motor drive doesn't run) | Keep previous status |
| 2 | Disable (AC motor drive will run) | Change according to the new operation command source |

| | | |
|---|---|---|
| 3 | Enable (AC motor drive doesn't run) | Change according to the new operation command source |
| 4 | Disable (AC motor drive will run) | Changes as the external terminal's status changes |

When the operation command source is from external terminal and operation command is ON (NPN mode: MI1/MI2-DCM=closed, PNP mode: MI1/MI2+24V=closed, please refer to chapter 2 wiring for details), the AC motor drive will operate according to Pr.02.05 after power is applied. **<For terminals MI1 and MI2 only>**
Setting #4 is an external terminal control setting when the motor drive restarts after an instantaneous power failure. When the motor drive has an instantaneous power failure, the DC bus will decrease to LV. If a command is sent from the host computer while the DC bus is at LV and the operating command is still conductive trigger, the motor drive can be restarted.

1. When Pr.02.05 is set to 0 or 2 or 4, AC motor drive will run immediately.
2. When Pr.02.05 is set to 1 or 3, AC motor drive will remain stopped until operation command is received after previous operation command is cancelled.

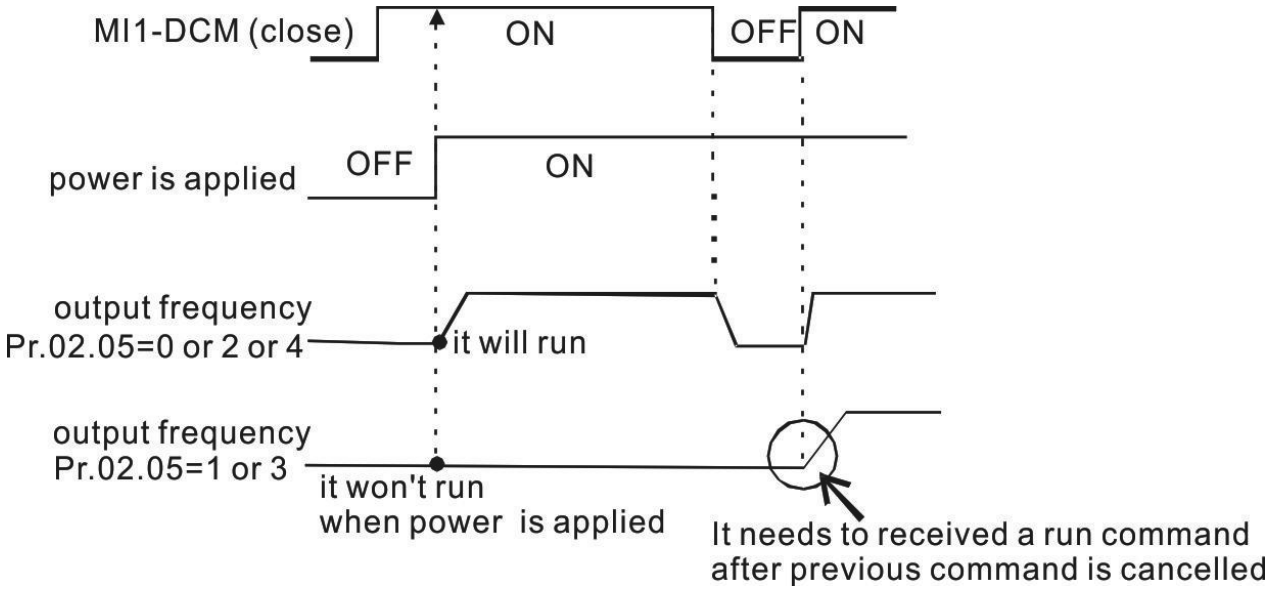


When the operation command source isn't from the external terminals, independently from whether the AC motor drive runs or stops, the AC motor drive will operate according to Pr.02.05 if the two conditions below are both met.

1. When operation command source is changed to external terminal (Pr.02.01=1 or 2)
2. The status of terminal and AC motor drive is different.

And the operation of the AC motor drive will be:

1. When setting 0 or 1, the status of AC motor drive is not changed by the terminal status.
2. When setting 2 or 3 or 4, the status of AC motor drive is changed by the terminal status.

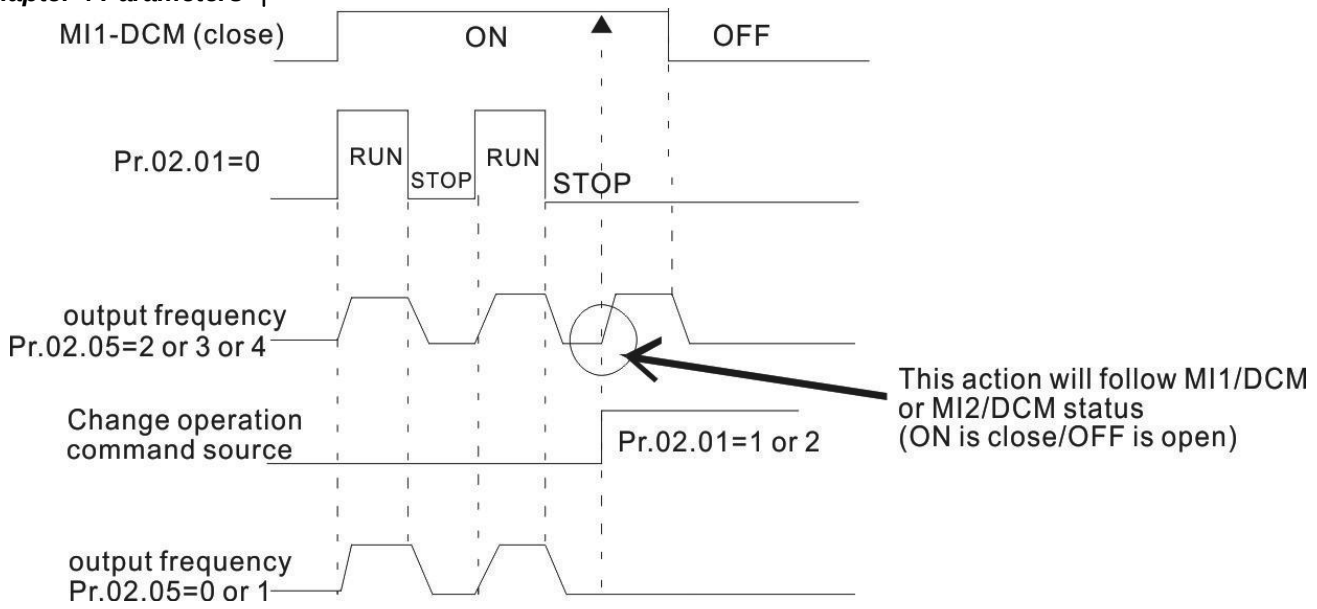


- When Pr.02.05 is set to 1 or 3, it does not guarantee that the motor will never run under this condition. It is possible the motor may be set in motion by a malfunctioning switch.
- Related parameters: Pr.02.01(Source of First Operation Command)

## 02.06 Loss of ACI Signal (4-20mA)

Factory Setting: 1

| | | |
|---|---|---|
| Settings | 0 | Decelerate to 0Hz |
| | 1 | Coast to stop and display “AErr” |
| | 2 | Continue operation by the last frequency command |

- This parameter determines the behavior when ACI is lost.
- When setting to 1, it will display warning message “AErr” on the keypad(optional) in case of loss of ACI signal and execute the setting. The AC motor drive will stop outputting immediately, the motor will free run to stop. Please press “RESET” key to clear it.
- When setting 0 or 2, it will not display warning message “AErr” on the keypad(optional) in case of loss of ACI signal and execute the setting. If it is set to 0, the motor will decelerate to 0Hz by the setting of deceleration time (Pr.01.10/Pr.01.12). If it is set to 2, the motor will continue to run. For these two settings, the warning message will stop blinking when ACI signal is recovered. Please press “RESET” key to clear it.
- Related parameters: Pr.01.10(Decel Time 1) and Pr.01.12(Decel Time 2)

## 02.07 Up/Down Mode

Factory Setting: 0

| | | |
|---|---|---|
| Settings | 0 | By digital keypad up/down keys mode |
| | 1 | Based on Accel/Decel Time acc. to Pr.01.09 to 01.12 |
| | 2 | Constant speed (acc. to Pr. 02.08) |
| | 3 | Pulse input unit (acc. to Pr. 02.08) |

- This parameter determines the increase/decrease of the master frequency when operated via the Multi-function Inputs when Pr.04.05~Pr.04.08 are set to 10 (Up command) or 11 (Down command).

When Pr.02.07 is set to 0, it uses the external terminals UP/DOWN key to increase/decrease the frequency (F) as shown at the right of the following figure. Its function is the same as the UP/DOWN key on the digital keypad. In this mode, it also can use UP/DOWN key on the keypad to control.

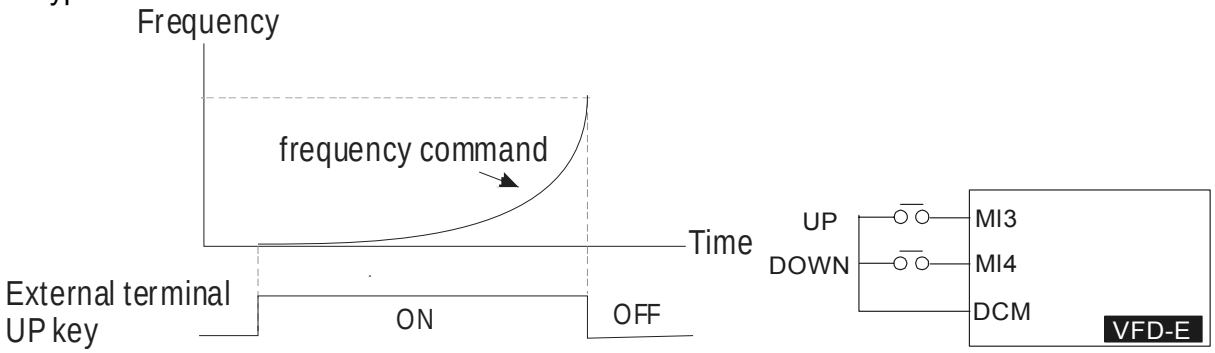


When Pr.02.07 is set to 1: increase/decrease the frequency by acceleration/deceleration settings(Pr.01.09~01.12). It is valid only when the AC motor drive is running.

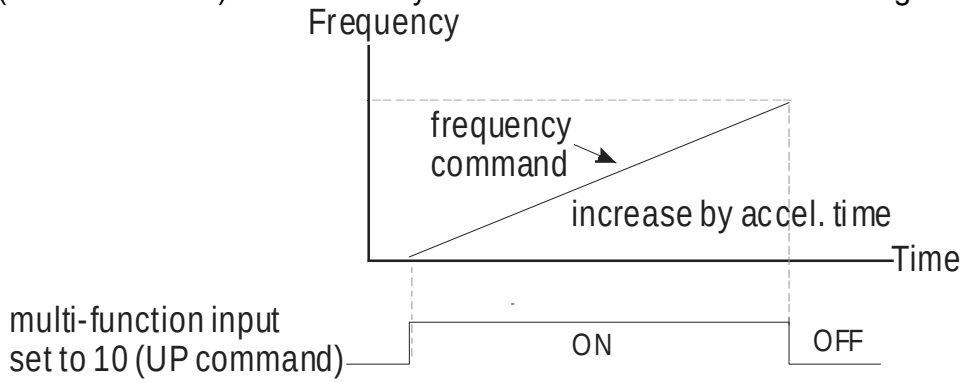


When Pr.02.07 is set to 2: use multi-function input terminal ON/OFF to increase/decrease the frequency by Pr.02.08.

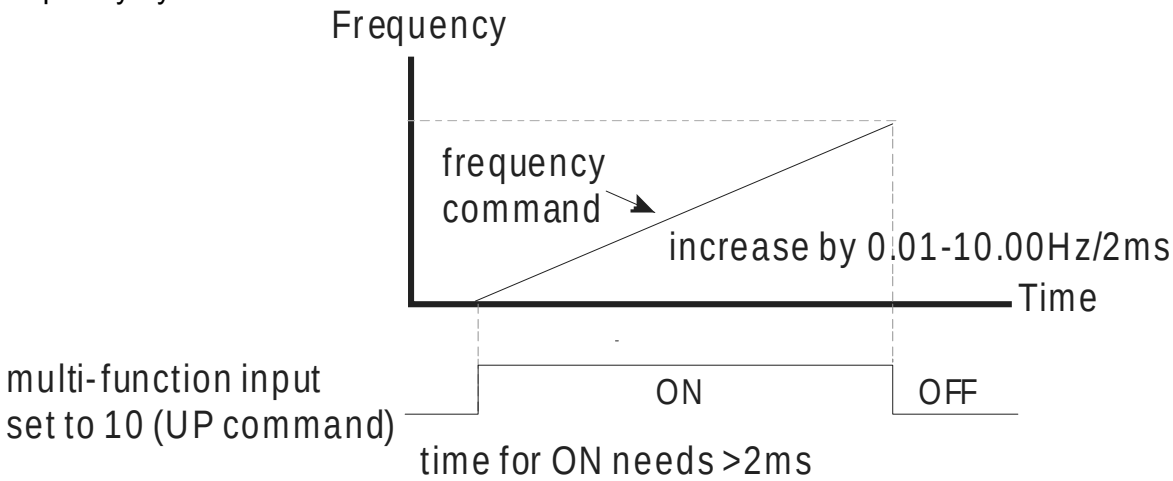


When Pr.02.07 is set to 3: increase/decrease the frequency by Pr.02.08 (unit: pulse input). Every ON after OFF is regarded as a input pulse.

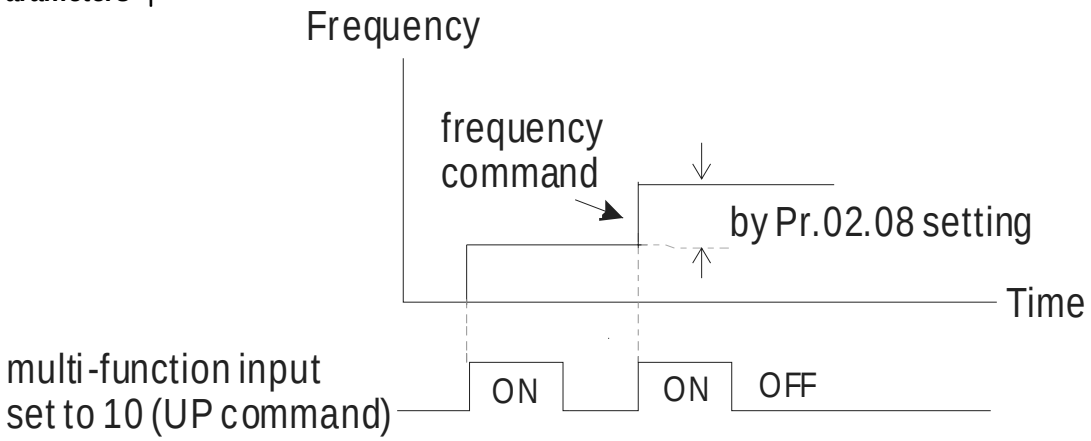


📖 Related parameters: Pr.02.08(Accel/Decel Rate of Change of UP/DOWN Operation with Constant Speed), Pr.04.05(Multi-function Input Terminal (MI3)), Pr.04.06(Multi-function Input Terminal (MI4)), Pr.04.07(Multi-function Input Terminal (MI5)), Pr.04.08(Multi-function Input Terminal (MI6))

| **02.08** | Accel/Decel Rate of Change of UP/DOWN Operation with Constant Speed | Unit: Hz/2ms |
|---|---|---|
| Settings | 0.01~10.00 Hz/2ms | Factory Setting: 0.01 |

📖 This parameter determinates the constant speed When Pr.02.08 is set to 2 or 3.

| **02.11** | ✓Keypad Frequency Command | Unit: Hz |
|---|---|---|
| Settings | 0.00 to 600.00Hz<br>(Japanese version: 0.00 to 599.00 Hz ) | Factory Setting: 60.00 |

📖 This parameter can be used to set frequency command or read keypad frequency command.
📖 Related parameters: Pr.02.12 (Communication Frequency Command)

| **02.12** | ✓Communication Frequency Command | Unit: Hz |
|---|---|---|
| Settings | 0.00 to 600.00Hz<br>(Japanese version: 0.00 to 599.00 Hz ) | Factory Setting: 60.00 |

📖 This parameter can be used to set frequency command or read communication frequency command.
📖 It can use this parameter for remote control via communication.

| **02.13** | The Selections for Saving Keypad or Communication Frequency Command | |
|---|---|---|
| | | Factory Setting: 0 |
| Settings | 0 | Save Keypad & Communication Frequency |
| | 1 | Save Keypad Frequency only |
| | 2 | Save Communication Frequency only (Not for VFD*E*C model) |

📖 This parameter is used to save keypad or RS-485 frequency command.

- Setting 0: After the AC motor drive is power off, save keypad and communication frequency in the AC motor drive.
- Setting 1: After the AC motor drive is power off, only save keypad frequency in the AC motor drive and won't save communication frequency.
- Setting 2: After the AC motor drive is power off, only save communication frequency in the AC motor drive and won't save keypad frequency.
- The keypad or communication frequency only can be saved when Pr. 02.00/Pr.02.09=0 (the source of frequency is from keypad) or Pr.02.00/Pr.02.09=3(the source of frequency is from communication).
- Related parameters: Pr.02.00(Source of First Master Frequency Command) and Pr.02.09(Source of Second Frequency Command).

| **02.14** | Initial Frequency Selection (for keypad & RS485/USB) |
|---|---|

Factory Setting: 0

| | | |
|---|---|---|
| Settings | 0 | By Current Freq Command |
| | 1 | By Zero Freq Command |
| | 2 | Refer to Pr02-25 to set up |

| **02.15** | Initial Frequency Set point (for keypad & RS485/USB) | Unit: Hz |
|---|---|---|

Settings 0.00 ~ 600.00Hz (Japanese version: 0.00 to 599.00 Hz ) Factory Setting: 60.00

These parameters are used to determinate the frequency at stop:
When setting Pr.02.14 to 0: the initial frequency will be current frequency.
When setting Pr.02.14 to 1: the initial frequency will be 0.
When setting Pr.02.14 to 2: the initial frequency will be Pr.02.15.

| **02.16** | Display the Master Freq Command Source |
|---|---|

Settings Read Only Factory display: 1

You can read the master frequency command source by this parameter.

| Display Value | Bit | Function |
|---|---|---|
| 1 | Bit0=1 | Master Freq Command Source by First Freq Source (Pr.02.00). |
| 2 | Bit1=1 | Master Freq Command Source by Second Freq Source (Pr.02.09). |
| 4 | Bit2=1 | Master Freq Command Source by Multi-input function |
| 8 | Bit3=1 | Master Freq Command Source by PLC Freq command<br>(NOT for VFD*E*C models) |

When it displays 4, it means that the master frequency command source is from multi-input function. Thus, when Pr.04.05~04.08 are set to 1(Multi-Step speed command 1), 2(Multi-Step

speed command 2), 3(Multi-Step speed command 3), 4(Multi-Step speed command 4), 8(Jog Operation), 10(Up: Increment master frequency) and 11(Down: Decrement master frequency), it displays 4 in Pr.02.16.

📖 Pr.04.05(Multi-function Input Terminal (MI3)), Pr.04.06(Multi-function Input Terminal (MI4)), Pr.04.07(Multi-function Input Terminal (MI5)), Pr.04.08(Multi-function Input Terminal (MI6))

| **02.17** | Display the Operation Command Source |
|---|---|

Settings Read Only Factory display: 4

You can read the operation source by this parameter.

| Display Value | Bit | Function |
|---|---|---|
| 1 | Bit0=1 | Operation Command Source by Digital Keypad |
| 2 | Bit1=1 | Operation Command Source by RS485 communication |
| 4 | Bit2=1 | Operation Command Source by External Terminal |
| 8 | Bit3=1 | Operation Command Source by Multi-input function |
| 16 | Bit4=1 | Operation Command Source by PLC Operation Command<br>(NOT for VFD*E*C models) |
| 32 | Bit5=1 | Operation Command Source by CANopen Communication Interface |

When it displays 8, it means that the operation command source is from multi-input function. Thus, when Pr.04.05~04.08 are set to 8(Jog Operation), 18(Operation command selection (external terminals)), 19(Operation command selection(keypad)), 20(Operation command selection (communication)) and 21(FWD/REV command), it will display 8 in Pr.02.17.

Pr.04.05(Multi-function Input Terminal (MI3)), Pr.04.06(Multi-function Input Terminal (MI4)), Pr.04.07(Multi-function Input Terminal (MI5)), Pr.04.08(Multi-function Input Terminal (MI6))

| 02.18 | Selection for Carrier Modulation |
|---|---|

Factory Setting: 0

| | | |
|---|---|---|
| Settings | 0 | By carrier modulation of load current and temperature |
| | 1 | By carrier modulation of load current |

Setting 0: The PWM carrier frequency (Fc) will be decreased automatically by heat sink temperature and output current of the AC motor drive. Please refer to the following figure for the decreasing the PWM carrier frequency. It is used as a necessary precaution to prevent the AC motor drive from overheating and thus extends IGBT's life. Example for 460V models: Assume the carrier frequency to be 15kHz, the ambient temperature is 35 degrees C with a single AC motor drive(mounting method A). If the output current exceeds 80% * rated current, the AC motor drive will decrease the carrier frequency automatically according to the following figure. If output current is 100% * rated current, the carrier frequency will decrease from 15kHz to 12kHz.

Mounting method

**Method A**

**Frame A**

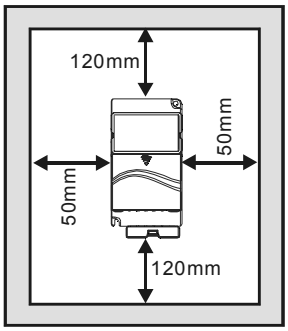


**Frame B & C**

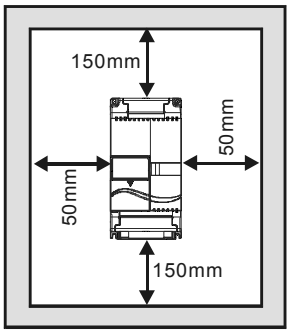


**Method B**

**Frame A**

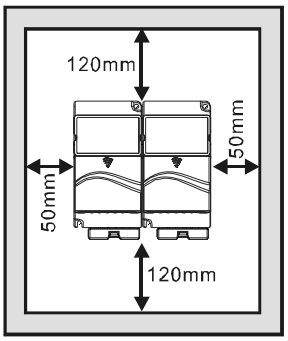


**Frame B & C**

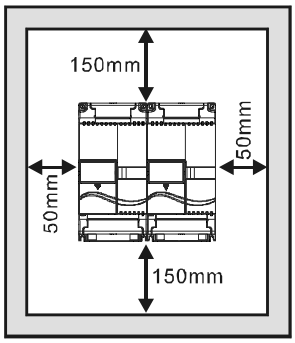


The relation between rated current and carrier frequency

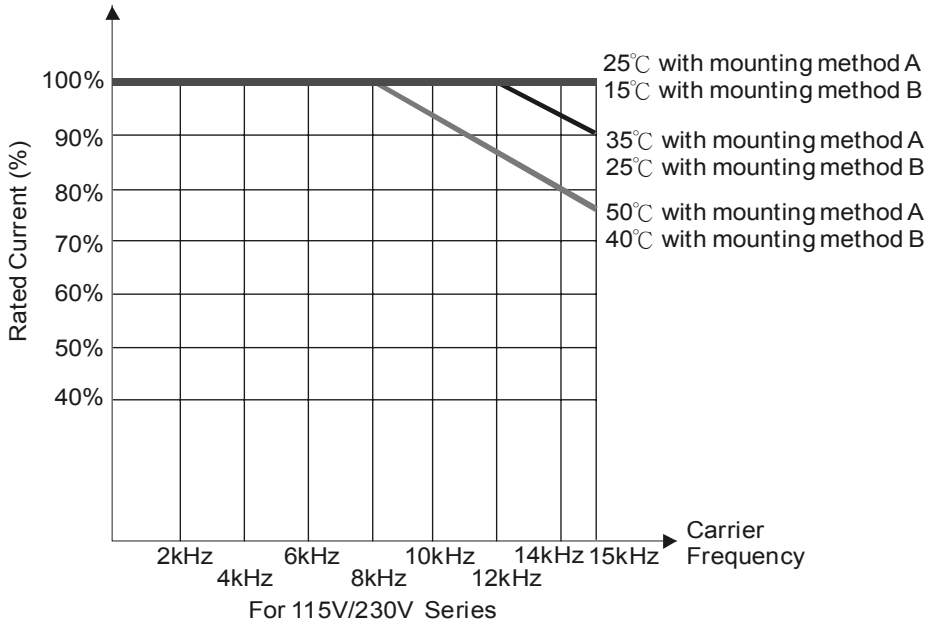


For 115V/230V Series

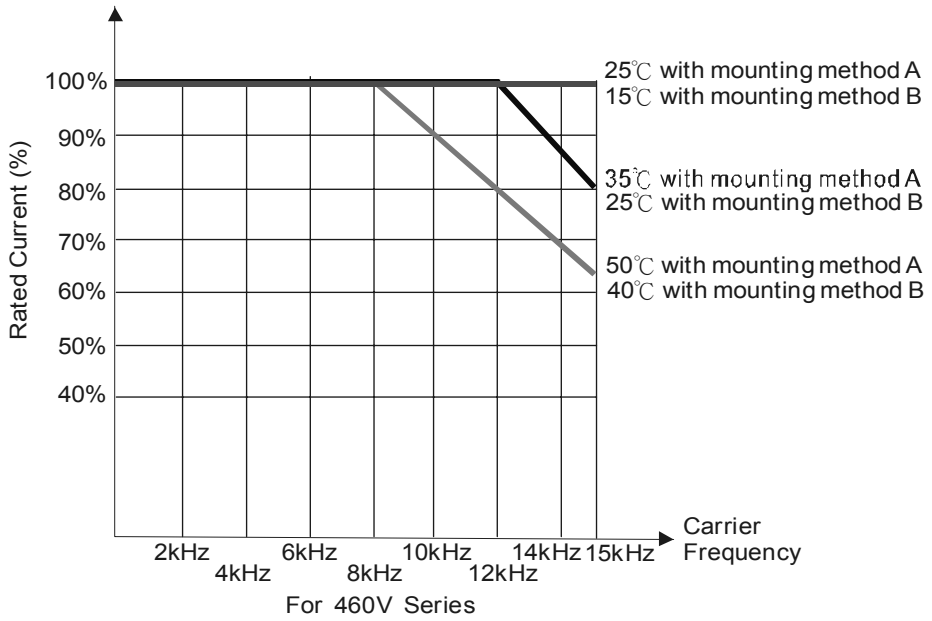


For 460V Series

- Setting 1: to prevent the AC motor drive from overheating and thus extends IGBT's life and also prevent carrier change and motor noise due to surrounding temperature and frequently load change, it needs to use this setting. Please refer to the following figure for the selection of carrier frequency and rated current. For example, when carrier frequency should be kept in 15Hz, the rated current of the AC motor drive must be 65%. That means the rated current for over load is 150% * 65% =97.5%. Thus, the rated current should be within the range of the following figure to keep the carrier frequency at a fix frequency.
- Related parameter: Pr.02.03 (PWM Carrier Frequency Selections)

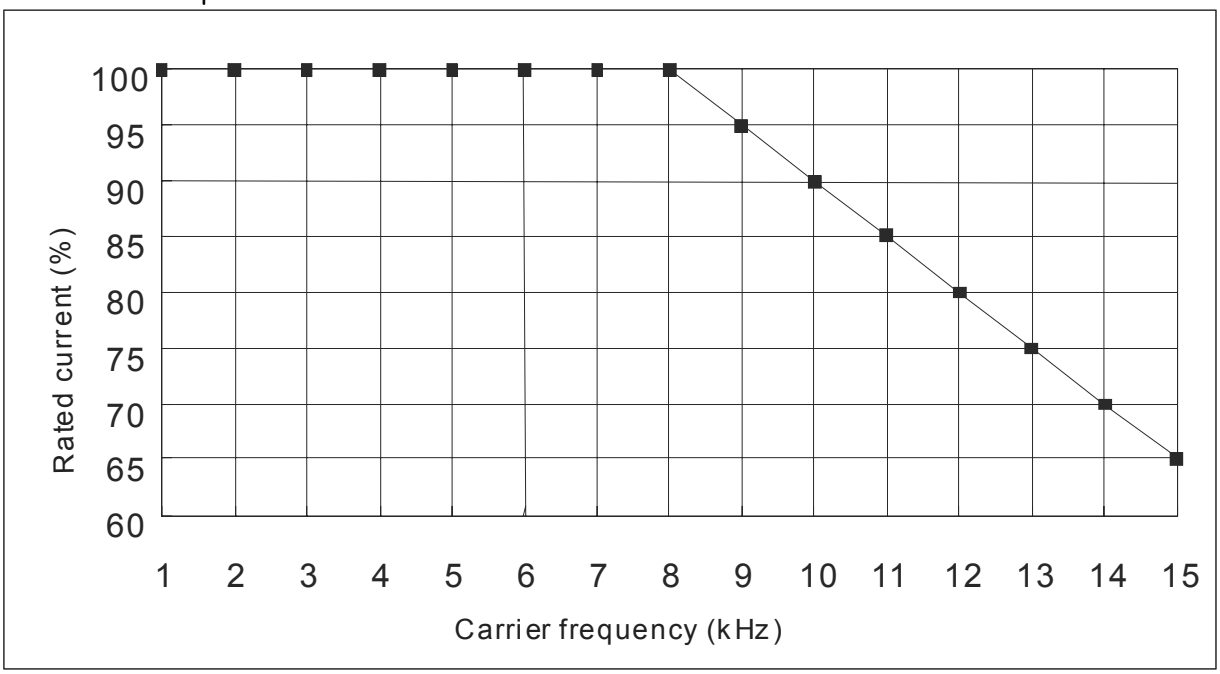


| **02.19** | Selection of Zero speed control mode |
|---|---|

Factory Setting: 0

| | | |
|---|---|---|
| Settings | 0 | Enter standby mode when zero speed |
| | 1 | Run DC brake when zero speed(the max. output voltage *0.05 ) |

# Group 3: Output Function Parameters

| **03.00** | Multi-function Output Relay (RA1, RB1, RC1) |
|---|---|

Factory Setting: 8

| **03.01** | Multi-function Output Terminal MO1 |
|---|---|

Factory Setting: 1

| Settings | Function | Description |
|---|---|---|
| 0 | No Function | |
| 1 | AC Drive Operational | Active when the drive is ready or RUN command is “ON”. |
| 2 | Master Frequency (F) Attained | Active when the output frequency(H) of AC motor drive reaches the output frequency(F) setting. |
| 3 | Zero Speed | Active when Command Frequency is lower than the Minimum Output Frequency. |
| 4 | Over-Torque Detection(OL2) | Active as long as over-torque is detected. (Refer to Pr.06.03 ~ Pr.06.05) |
| 5 | Baseblock (B.B.) Indication | Active when the output of the AC motor drive is shut off during baseblock. Base block can be forced by Multi-function input (setting 09). |
| 6 | Low-Voltage Indication | Active when low voltage (Lv) is detected. |
| 7 | Operation Mode Indication | Active when operation command is controlled by external terminal. |
| 8 | Fault Indication | Active when the drive detects abnormal conditions (except Lv and bb) occurs, the contact will be "closed" (eg.:oc, ov, oH, oL, oL1, EF, cF3, HPF, ocA, ocd, ocn, GFF). |
| 9 | Desired Frequency 1 Attained | Active when the desired frequency 1(Pr.03.02) is attained. |
| 10 | Terminal Count Value Attained | Active when the internal counter reaches Terminal Count Value. |
| 11 | Preliminary Count Value Attained | Active when the internal counter reaches Preliminary Count Value. |

| Settings | Function | Description |
|---|---|---|
| 12 | Over Voltage Stall supervision | Active when the Over Voltage Stall function(Pr.06.00) operating |
| 13 | Over Current Stall supervision | Active when the Over Current Stall function(Pr.06.01, Pr.06.02) operating |
| 14 | IGBT Overheat Warning | When IGBT overheats, it will signal to prevent OH turn off the drive. When it is higher than 85°C (185°F), it will be ON. When it is Lower than 80°C (180°F), it will be OFF. |
| 15 | Over Voltage supervision | Active when the DC-BUS voltage exceeds level |
| 16 | PID supervision | Active when the PID feedback signal is abnormal (Refer to Pr.10.12 and Pr.13.) |
| 17 | Forward command | Active when the direction command is FWD |
| 18 | Reverse command | Active when the direction command is REV |
| 19 | Zero Speed Output Signal | Active when the drive is standby or stop |
| 20 | Communication Warning (FbE,Cexx, AoL2, AUE, SAvE) | Active when there is a Communication Warning |
| 21 | Brake Control (Desired Frequency Attained) | Active when output frequency ≥Pr.03.11. Deactivated when output frequency ≤Pr.03.12 after STOP command. |
| 22 | Drive Ready | Active when the drive is on and no abnormality detected. |
| 23 | Desired Frequency 2 Attained | Active when the desired frequency 1(Pr.03.14) is attained. |
| 24 | Function of Output Frequency Control Multi-output terminal ON/OFF | Active when the drive output frequency is higher than 03-11 level, the terminal is closed; Active when the output frequency is less than 03-12, the terminal is opened. |

| 03.02 | Desired Frequency 1 Attained | Unit: 0.01 |
|---|---|---|
| 03.14 | Desired Frequency 2 Attained | Unit: 0.01 |

Settings 0.00 to 600.00 Hz Factory Setting: 0.00
(Japanese version: 0.00 to 599.00 Hz )

- If a multi-function output terminal is set to function as Desired Frequency Attained 1(Pr.03.00 to Pr.03.01=09), then the output will be activated when the output frequency reaches Pr.03.02 setting.
- If a multi-function output terminal is set to function as Desired Frequency Attained 2(Pr.03.00 to Pr.03.01=23), then the output will be activated when the output frequency reaches Pr.03.14 setting.
- Related parameters: Pr.03.00(Multi-function Output Relay (RA1, RB1, RC1)) and Pr.03.01(Multi-function Output Terminal MO1)

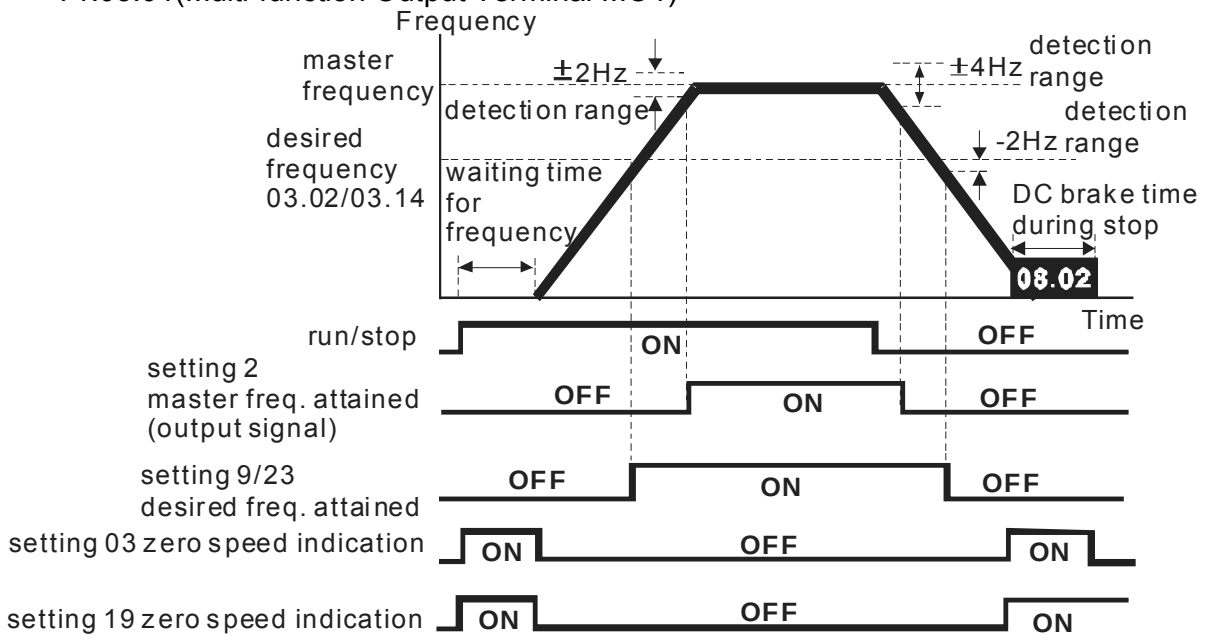


**output timing chart of multiple function terminals(Pr.03.00/Pr.03.01) when setting to frequency attained or zero speed indication**

**NOTE**

When the output frequency reaches the setting frequency, the detection ranges for the multi-function output terminals are: ±2Hz (from OFF to ON) and ±4Hz (from ON to OFF). The detection range for the output frequency reaches the desired frequency is -2Hz.

| 03.03 | ✓Analog Output Signal (AFM) |
|---|---|

Factory Setting: 0

Settings 0 Analog Frequency Meter (0 to Maximum Output Frequency)
1 Analog Current Meter (0 to 250% of rated AC motor drive current)

- This parameter sets the function of the AFM output 0~+10VDC (ACM is common). Refer to Pr.03.04 for applications.

- Related parameters: Pr.01.00(Maximum Output Frequency (Fmax)) and Pr.03.04(Analog Output Gain)

| **03.04** | ✓Analog Output Gain | Unit: % |
|---|---|---|
| | Settings 1 to 200% | Factory Setting: 100 |

- This parameter sets the voltage range of the analog output signal AFM.
- When Pr.03.03 is set to 0, the analog output voltage is directly proportional to the output frequency of the AC motor drive. With Pr.03.04 set to 100%, the Maximum Output Frequency (Pr.01.00) of the AC motor drive corresponds to +10VDC on the AFM output.
- Similarly, if Pr.03.03 is set to 1, the analog output voltage is directly proportional to the output current of the AC drive. With Pr.03.04 set to 100%, then 2.5 times the rated current corresponds to +10VDC on the AFM output.

**NOTE**

Any type of voltmeter can be used. If the meter reads full scale at a voltage less than 10V, Pr. 03.04 should be set using the following formula:
Pr. 03.04 = ((meter full scale voltage)/10) x 100%
For Example: When using the meter with full scale of 5 volts, adjust Pr.03.04 to 50%. If Pr.03.03 is set to 0, then 5VDC will correspond to Maximum Output Frequency.

| **03.05** | Terminal Count Value | |
|---|---|---|
| | Settings 0 to 9999 | Factory Setting: 0 |

- This parameter sets the count value of the internal counter. To increase the internal counter, one of Pr.04.05 to 04.08 should be set to 12. It can be used in the counter control application.
- Upon completion of counting, the specified output terminal will be activated. (Pr.03.00 to Pr.03.01 set to 10). (the count value will be reset after reaching the setting of Pr.03.05)
- Related parameters: Pr.03.00(Multi-function Output Relay (RA1, RB1, RC1)), Pr.03.01(Multi-function Output Terminal MO1), Pr.04.05(Multi-function Input Terminal (MI3)), Pr.04.06(Multi-function Input Terminal (MI4)), Pr.04.07(Multi-function Input Terminal (MI5)) and Pr.04.08(Multi-function Input Terminal (MI6))

**NOTE**

When the display shows c555, the drive has counted 555 times. If display shows c555•, it means that real counter value is between 5,550 and 5,559.

| **03.06** | Preliminary Count Value | |
|---|---|---|
| | Settings 0 to 9999 | Factory Setting: 0 |

- When the counter value counts from c1 to this value, the corresponding multi-function output terminal will be activated.
- This parameter sets the count value of the internal counter. To increase the internal counter, one of Pr.04.05 to 04.08 should be set to 12. Upon completion of counting, the specified output terminal will be activated. (Pr.03.00 to Pr.03.01 set to 11).
- It can be used as an indication for the AC motor drive run in low speed to stop.
- Related parameters: Pr.03.00(Multi-function Output Relay (RA1, RB1, RC1)), Pr.03.01(Multi-function Output Terminal MO1), Pr.04.05(Multi-function Input Terminal (MI3)), Pr.04.06(Multi-function Input Terminal (MI4)), Pr.04.07(Multi-function Input Terminal (MI5)) and Pr.04.08(Multi-function Input Terminal (MI6)

Example: The timing diagram for Pr.03.05=5 and Pr.03.06=3

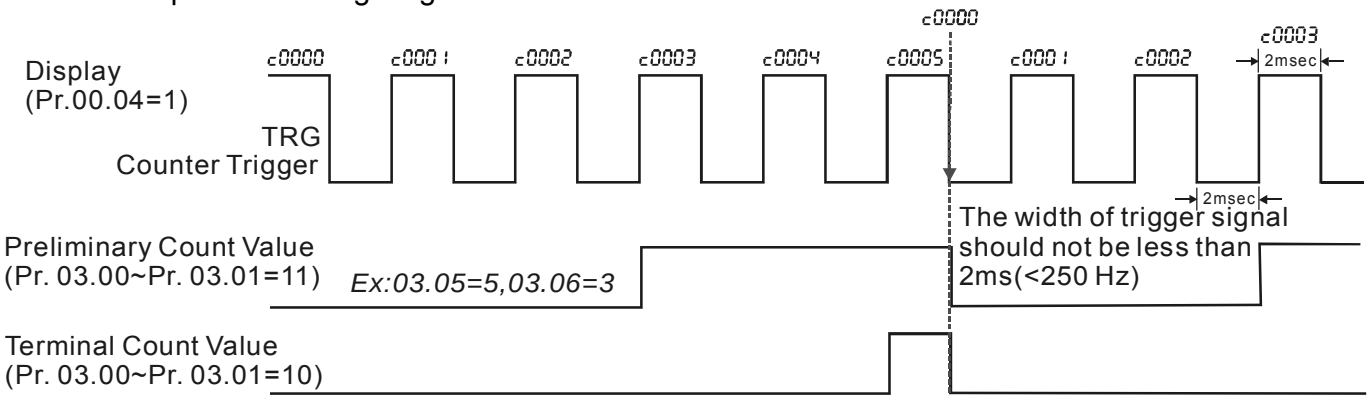


## 03.07 EF Active when Terminal Count Value Attained

Factory Setting: 0

| | | |
|---|---|---|
| Settings | 0 | Terminal count value attained, no EF display |
| | 1 | Terminal count value attained, EF active |

- The E.F. is external fault. It needs to set one of Pr.04.05~Pr.04.08 to 14 to active the terminal.
- If this parameter is set to 1 and the desired value of counter is attained, the AC drive will treat it as a fault. The drive will stop and show the “EF” message on the display. If this parameter is set to 0 and the desired value of counter is attained, the AC drive will continue run.
- It is used for choosing stop the AC motor drive or not when the desired value of counter is attained.

**NOTE**

The digital keypad is optional. When using without the keypad, the “FAULT” LED will be ON when there is fault message or warning indication set by external terminals.

## 03.08 Fan Control

Factory Setting: 0

| | | |
|---|---|---|
| Settings | 0 | Fan always ON |
| | 1 | 1 minute after AC motor drive stops, fan will be OFF |
| | 2 | Fan ON when AC motor drive runs, fan OFF when AC motor drive stops |
| | 3 | Fan ON when preliminary heatsink temperature attained |

- This parameter determines the operation mode of the cooling fan.
- Setting 0: fan will be ON after the AC motor drive is power on.
- Setting 1: fan runs when the AC motor drive runs and 1 minute after the AC motor drive stops, fan will stop.
- Setting 2: fan runs when the AC motor drive runs and stops when the AC motor drive stops.
- Setting 3: fan will auto detect the temperature of heatsink and operate by the temperature. When heatsink temperature is higher than 60°C, fan will run and the fan will stop once the heatsink temperature is lower than 40°C.

| 03.09 | The Digital Output Used by PLC (NOT for VFD*E*C models) |
|---|---|

Settings Read Only Factory display: 0

Bit0=1: RLY used by PLC

Bit1=1: MO1 used by PLC

Bit2=1: MO2/RA2 used by PLC

Bit3=1: MO3/RA3 used by PLC

Bit4=1: MO4/RA4 used by PLC

Bit5=1: MO5/RA5 used by PLC

Bit6=1: MO6/RA6 used by PLC

Bit7=1: MO7/RA7 used by PLC

- The equivalent 8-bit is used to display the status (used or not used) of each digital output. The value that Pr.03.09 displays is the result after converting 8-bit binary into decimal value.
- For standard AC motor drive, it only has 2-bit (bit0 and bit1). When extension card is installed, the number of the digital output terminals will increase according to the extension card. The maximum number of the digital output terminals is shown as follows.

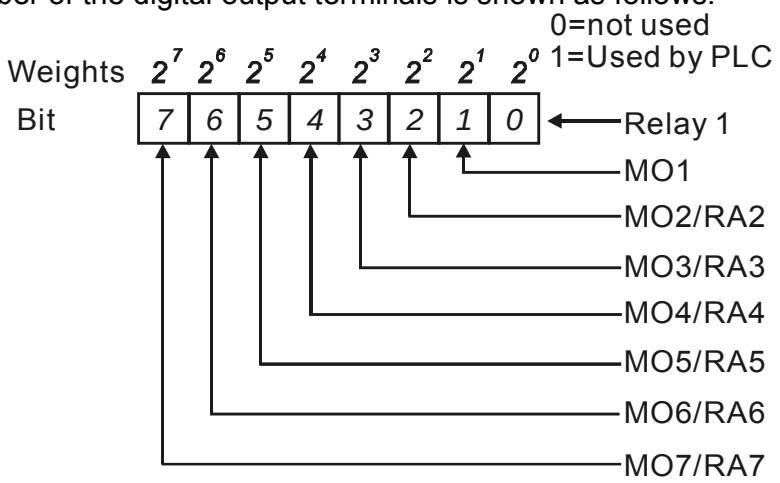


- For example: when Pr.03.09 is set to 3 (decimal) = 00000011 (binary) that indicates Relay1 and MO1 are used by PLC. (Pr.03.09= $2^0+2^1=3$)

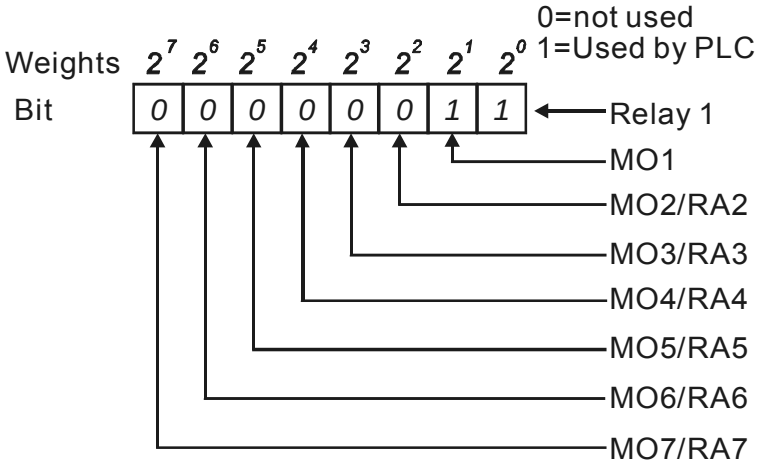


| 03.10 | The Analog Output Used by PLC (NOT for VFD*E*C models) | |
|---|---|---|
| Settings | Read Only | Factory display: 0 |

Bit0=1: AFM used by PLC

Bit1=1: AO1 used by PLC

Bit2=1: AO2 used by PLC

The equivalent 1-bit is used to display the status (used or not used) of each analog output. The value that Pr.03.10 displays is the result after converting 1-bit binary into decimal value.

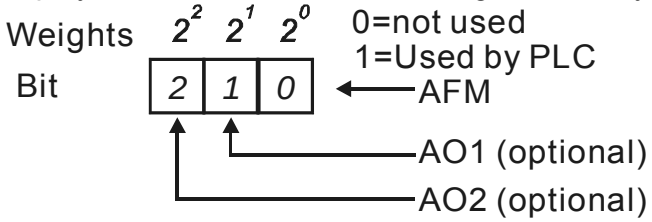


For Example:
If Pr.03.10 displays 1, it means that AFM is used by PLC.

| 03.11 | Brake Release Frequency | Unit: Hz |
|---|---|---|
| Settings | 0.00 to 20.0Hz | Factory Setting: 0.00 |
| **03.12** | Brake Engage Frequency | Unit: Hz |
| Settings | 0.00 to 20.0Hz | Factory Setting: 0.00 |

These two parameters are used to set control of mechanical brake via the output terminals (Relay or MO1) by setting Pr.03.00~03.01.

When Pr.03.00~03.01 is set to 21, the multi-function output terminal will be activated when the output frequency reaches Pr.03.11. When the AC motor drive stops and the output frequency reaches Pr.03.12, this multi-function output terminal will be activated.

Related parameters: Pr.03.00(Multi-function Output Relay (RA1, RB1, RC1)) and Pr.03.01(Multi-function Output Terminal MO1)

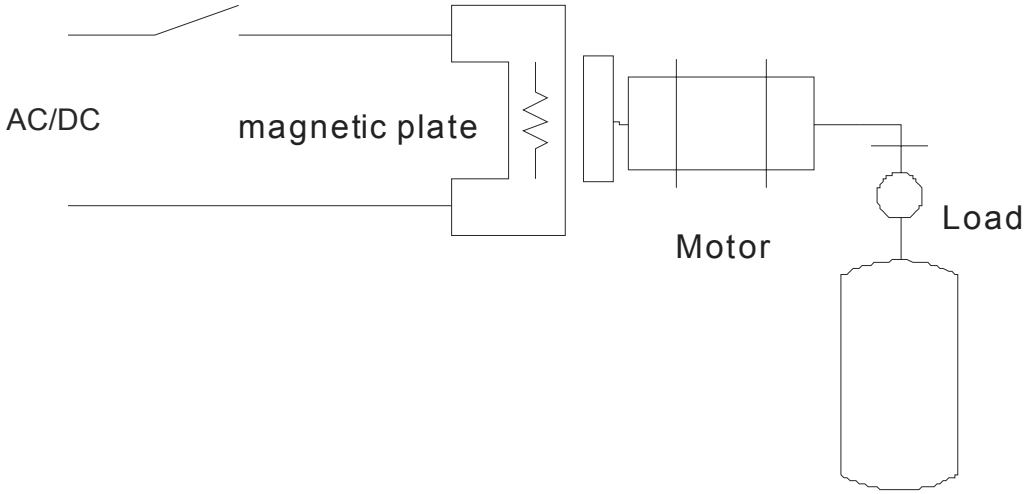


📖 Example:

When using Pr.03.11 and Pr.03.12 are used in life equipment as above figure. The timing figure is shown as follows. The DC brake is used before start-up and after stop. It can have high output torque at the beginning of start-up. The Brake Release Frequency (Pr.03.11) can be set by the requirement. The Brake Engage Frequency (Pr.03.12) can be set by requirement to be used when stopping near 0Hz to prevent vibration of counterforce for smooth operation.

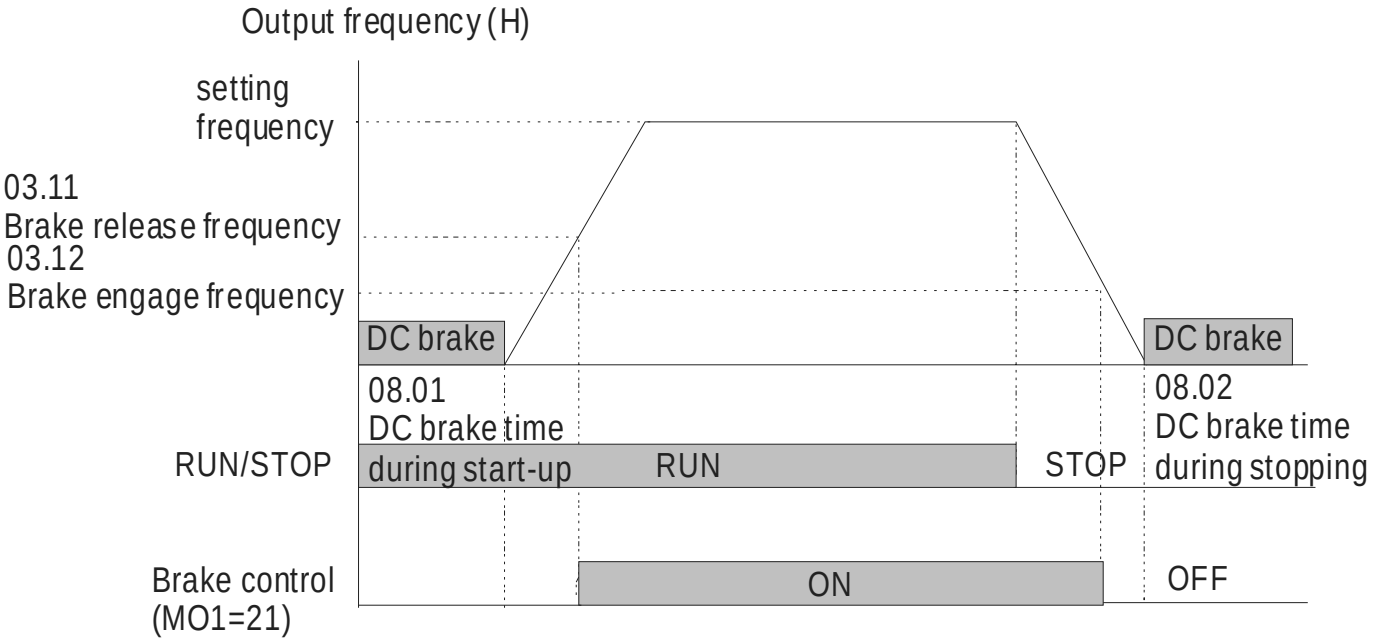


📖 Pr.03.00~03.01 Multi-function Output Terminal:24『Function of Output Frequency Control Multi-output terminal ON/OFF』: When output frequency is greater than Pr.03.11(Brake Release Frequency), this multi-function output terminal is conducted； When output frequency is less than Pr.03.11 (Brake Release Frequency), this multi-function output terminal is open circuit. Please note that when you select this function, Pr.03.11 MUST be greater than Pr.03.12, otherwise the multi-function output terminal is always in open circuit condition.

➢ Related parameters：03.00 Multi-function Output (Relay)、03.01 Multi-function Output Terminal (MO1)

## 03.13 Display the Status of Multi-function Output Terminals

Settings Read Only Factory display: ##

Bit0: RLY Status

Bit1: MO1 Status

Bit2: MO2/RA2 Status

Bit3: MO3/RA3 Status

Bit4: MO4/RA4 Status

Bit5: MO5/RA5 Status

Bit6: MO6/RA6 Status

Bit7: MO7/RA7 Status

- When all output external terminals aren't activated, Pr.03.13 will display 255 (11111111).
- For standard AC motor drive (without extension card), the multi-function output terminals are falling-edge triggered and Pr.03.13 will display 3 (11) for no action.

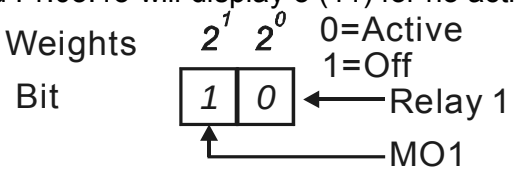


- For Example:
  If Pr.03.13 displays 2, it means Relay 1 is active.
  The display value 2 =bit 1 X $2^1$
- When extension card is installed, the number of the multi-function output terminals will increase according to the extension card. The maximum number of the multi-function output terminals is
  shown as
  follows.

# Group 4: Input Function Parameters

| | | |
|---|---|---|
| **04.00** | ⁄Keypad Potentiometer Bias | Unit: % |
| | Settings 0.0 to 200.0% | Factory Setting: 0.0 |
| **04.01** | ⁄Keypad Potentiometer Bias Polarity | |
| | | Factory Setting: 0 |
| | Settings 0 Positive Bias | |
| | 1 Negative Bias | |
| **04.02** | ⁄Keypad Potentiometer Gain | Unit: % |
| | Settings 0.1 to 200.0% | Factory Setting: 100.0 |
| **04.03** | Keypad Potentiometer Negative Bias, Reverse Motion Enable/Disable | |
| | | Factory Setting: 0 |
| | Settings 0 No Negative Bias Command | |
| | 1 Negative Bias: REV Motion Enabled | |

📖 Pr.04.00~04.03 are used for those applications that use analog voltage signal to adjust the setting frequency. Please refer to the following examples for the details of keypad potentiometer (optional, 0~10V or ±10V).

**Example 1: Standard application**

This is the most used setting. The user only needs to set Pr.02.00 to 04. The frequency command comes from keypad potentiometer.

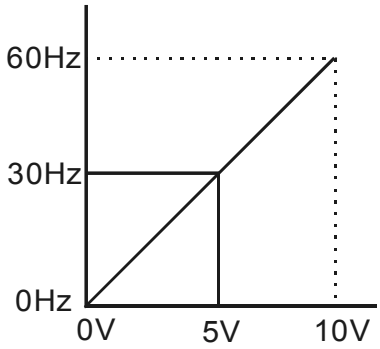


Pr.01.00=60Hz--Max. output Freq.
Potentiometer
Pr.04.00 =0%--Bias adjustment
Pr.04.01 =0--Positive bias
Pr.04.02 =100%--Input gain
Pr.04.03 =0--No negative bias command

**Example 2: Use of bias**

This example shows the influence of changing the bias. When the input is 0V the output frequency is 10 Hz. At mid-point a potentiometer will give 40 Hz. Once the Maximum Output Frequency is reached, any further increase of the potentiometer or signal will not increase the output frequency. (To use the full potentiometer range, please refer to Example 3.) The value of external input voltage/current 0-8.33V corresponds to the setting frequency 10-60Hz. Thus, the center of the keypad potentiometer is

40Hz and the value of external input voltage/current 8.33~10V corresponds to the setting frequency 60Hz. Please refer to example 3 for this part.

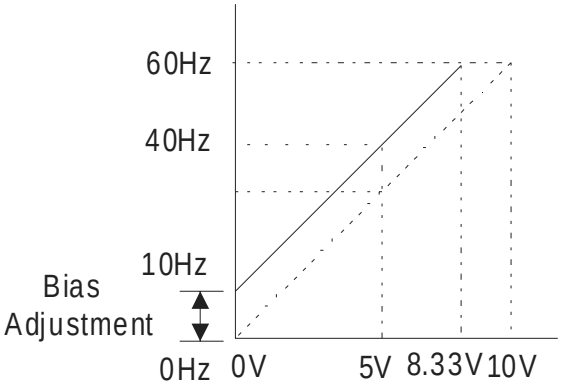


Pr.01.00=60Hz--Max. output Freq.
Potentiometer
Pr.04.00 =16.7%--Bias adjustment
Pr.04.01 =0--Positive bias
Pr.04.02 =100%--Input gain
Pr.04.03 =0--No negative bias command

Gain:100%

Bias adjustment:((10Hz/60Hz)/(Gain/100%))*100%=16.7%

**Example 3: Use of bias and gain for use of full range**

This example also shows a popular method. The whole scale of the potentiometer can be used as desired. In addition to signals of 0 to 10V, the popular voltage signals also include signals of 0 to 5V, or any value under 10V. Regarding the setting, please refer to the following examples.

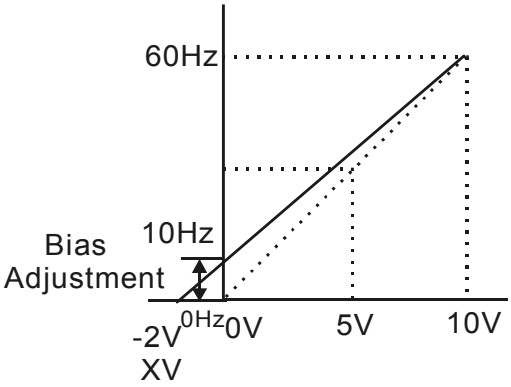


Pr.01.00=60Hz--Max. output Freq.
Potentiometer
Pr.04.00 =20.0%--Bias adjustment
Pr.04.01 =0--Positive bias
Pr.04.02 =83.3%--Input gain
Pr.04.03 =0--No negative bias command

Gain:(10V/(10V+2V))*100%=83.3%

Bias adjustment:((10Hz/60Hz)/(Gain/100%))*100%=20.0%

**Example 4: Use of 0-5V potentiometer range via gain adjustment**

This example shows a potentiometer range of 0 to 5 Volts. Instead of adjusting gain as example below, you can set Pr. 01.00 to 120Hz to achieve the same results.

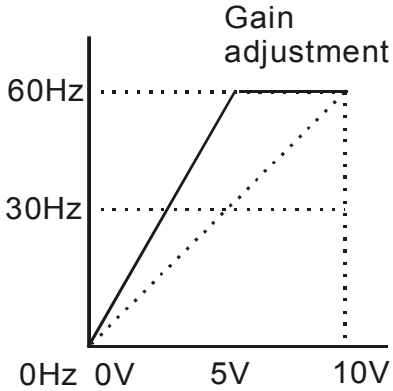


Pr.01.00=60Hz--Max. output Freq.
Potentiometer
Pr.04.00 =0.0%--Bias adjustment
Pr.04.01 =0--Positive bias
Pr.04.02 =200%--Input gain
Pr.04.03 =0--No negative bias command

Gain:(10V/5V)*100%=200%

**Example 5: Use of negative bias in noisy environment**

In this example, a 1V negative bias is used. In noisy environments it is advantageous to use negative bias to provide a noise margin (1V in this example).

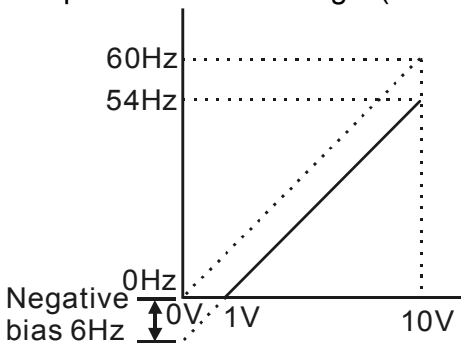


Pr.01.00=60Hz--Max. output Freq.
Potentiometer
Pr.04.00 =10.0%--Bias adjustment
Pr.04.01 =1--Negative bias
Pr.04.02 =100%--Input gain
Pr.04.03 =0--No negative bias command

Gain:100%

Bias adjustment:((6Hz/60Hz)/(Gain/100%))*100%=10.0%

**Example 6: Use of negative bias in noisy environment and gain adjustment to use full potentiometer range**

In this example, a negative bias is used to provide a noise margin. Also a potentiometer frequency gain is used to allow the Maximum Output Frequency to be reached.

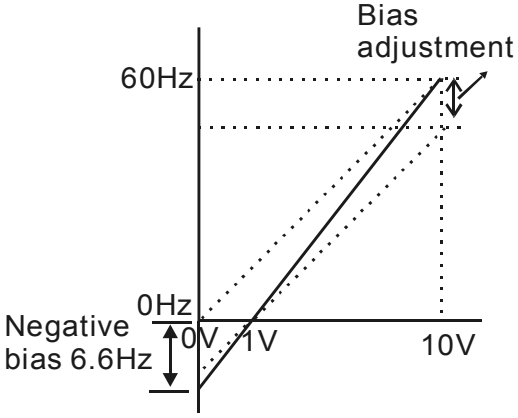


Pr.01.00=60Hz--Max. output Freq.
Potentiometer
Pr.04.00 =10.0%--Bias adjustment
Pr.04.01 =1--Negative bias
Pr.04.02 =111%--Input gain
Pr.04.03 =0--No negative bias command

Gain:(10V/9V)*100%=111%

Bias adjustment:((6.6Hz/60Hz)/(Gain/100%))*100%=10.0%

**Example 7: Use of 0-10V potentiometer signal to run motor in FWD and REV direction**

In this example, the input is programmed to run a motor in both forward and reverse direction. The motor will be idle when the potentiometer position is at mid-point of its scale. Using the settings in this example disables the external FWD and REV controls.

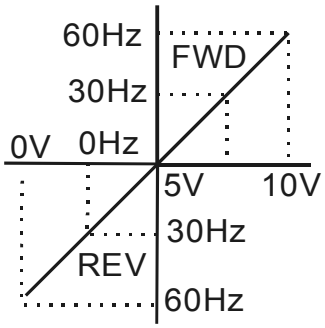


Pr.01.00=60Hz--Max. output Freq.
Potentiometer
Pr.04.00 =50.0%--Bias adjustment
Pr.04.01 =1--Negative bias
Pr.04.02 =200%--Input gain
Pr.04.03 =1--Negative bias: REV motion enabled

Gain:(10V/5V)*100%=200%

Bias adjustment:((60Hz/60Hz)/(Gain/100%))*100%=200%

**Example 8: Use negative slope**

In this example, the use of negative slope is shown. Negative slopes are used in applications for control of pressure, temperature or flow. The sensor that is connected to the input generates a large signal (10V) at high pressure or flow. With negative slope settings, the AC motor drive will slow stop the motor. With these settings the AC motor drive will always run in only one direction (reverse). This can only be changed by exchanging 2 wires to the motor.

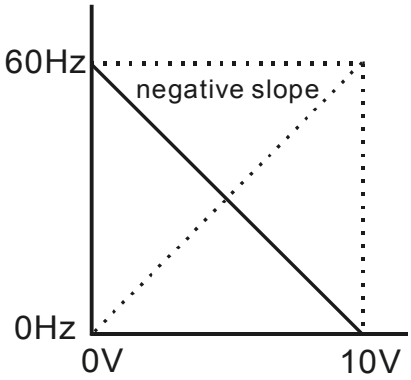


Pr.01.00=60Hz--Max. output Freq.
Potentiometer
Pr.04.00 =100%--Bias adjustment
Pr.04.01 =0--Positive bias
Pr.04.02 =100%--Input gain
Pr.04.03 =1--Negative bias: REV motion enabled

Gain:(10V/10V)*100%=100%

Bias adjustment:((60Hz/60Hz)/(Gain/100%))*100%=100%

| | | |
|---|---|---|
| **04.11** | Minimum AVI Voltage | Unit: V |
| | Settings 0.0 to 10.0V | Factory Setting: 0.0 |
| **04.12** | Minimum AVI Frequency (percentage of Pr.01.00) | Unit: % |
| | Settings 0.0 to 100.0% | Factory Setting: 0.0 |
| **04.13** | Maximum AVI Voltage | Unit: V |
| | Settings 0.0 to 10.0V | Factory Setting: 10.0 |
| **04.14** | Maximum AVI Frequency (percentage of Pr. 01.00) | Unit: % |
| | Settings 0.0 to 100.0% | Factory Setting: 100.0 |
| **04.15** | Minimum ACI Current | Unit: mA |
| | Settings 0.0 to 20.0mA | Factory Setting: 4.0 |
| **04.16** | Minimum ACI Frequency (percentage of Pr. 01.00) | Unit: % |
| | Settings 0.0 to 100.0% | Factory Setting: 0.0 |

| | | |
|---|---|---|
| **04.17** | Maximum ACI Current | Unit: mA |
| | Settings 0.0 to 20.0mA | Factory Setting: 20.0 |

| | | | |
|---|---|---|---|
| **04.18** | Maximum ACI Frequency (percentage of Pr. 01.00) | | Unit: % |
| | Settings | 0.0 to 100.0% | Factory Setting: 100.0 |
| **04.19** | ACI Terminal Mode Selection | | |
| | | | Factory Setting: 0 |
| | Settings | 0 ACI | |
| | | 1 AVI2 | |

| | | | |
|---|---|---|---|
| **04.20** | Minimum AVI2 Voltage | | Unit: V |
| | Settings | 0.0 to 10.0V | Factory Setting: 0.0 |
| **04.21** | Minimum AVI2 Frequency (percentage of Pr.1-00) | | Unit: % |
| | Settings | 0.0 to 100.0% | Factory Setting: 0.0 |
| **04.22** | Maximum AVI2 Voltage | | Unit: V |
| | Settings | 0.0 to 10.0V | Factory Setting: 10.0 |
| **04.23** | Maximum AVI2 Frequency (percentage of Pr.1-00) | | Unit: % |
| | Settings | 0.0 to 100.0% | Factory Setting: 100.0 |

Please note the ACI/AVI switch on the AC motor drive. Switch to ACI for 4 to 20mA analog current signal (ACI) (Pr.04.19 should be set to 0) and AVI for analog voltage signal (AVI2) (Pr.04.19 should be set to 1). When ACi/AVI switch is not set by Pr.04.19, the keypad (optional) will display fault code “AErr” and needs to press “RESET” to clear it.

The above parameters are used to set the analog input reference values. The min and max frequencies are based on Pr.01.00 (during open-loop control) as shown in the following.

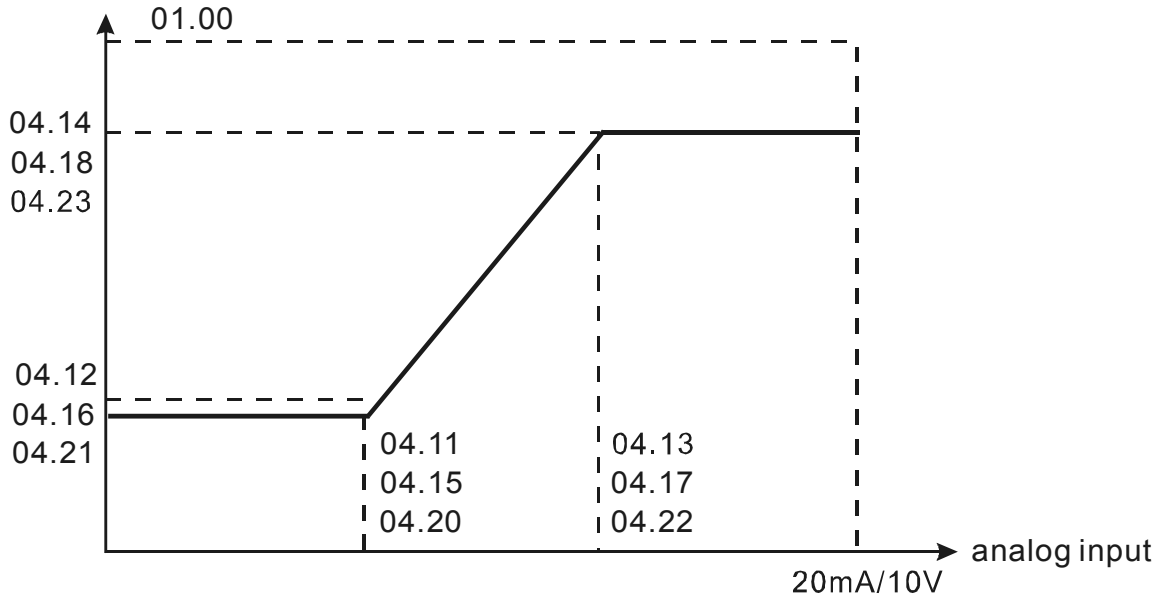

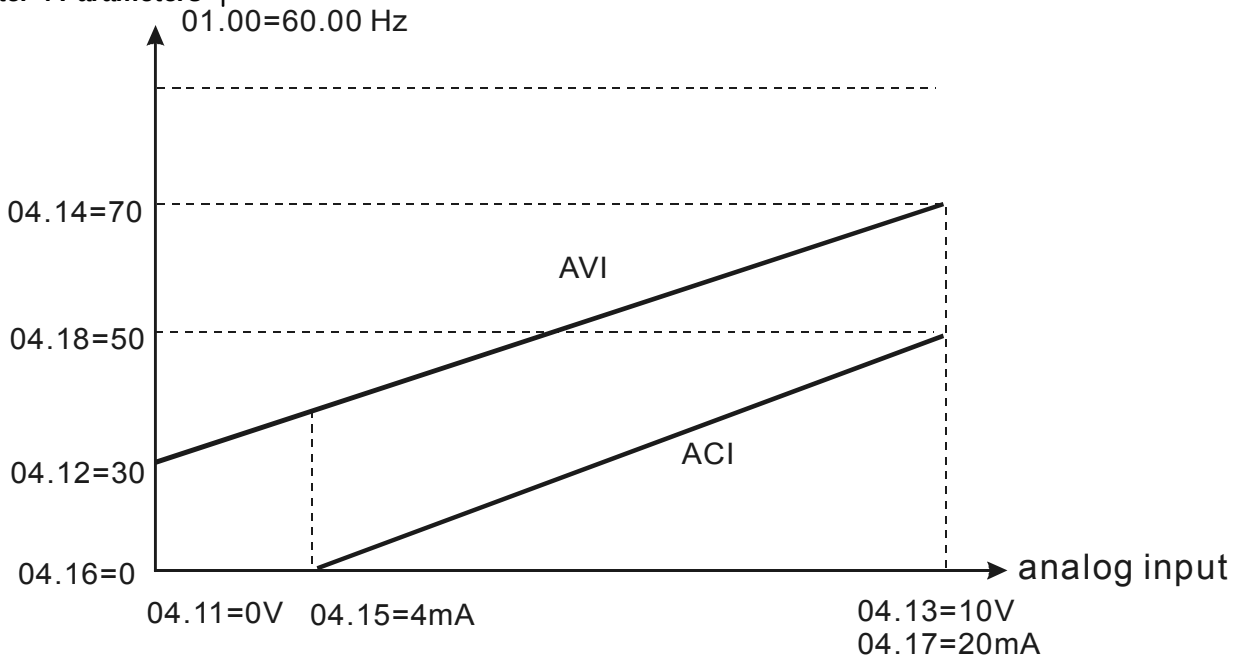


| 04.04 | Multi-function Input Terminal (MI1, MI2) 2-wire/ 3-wire Operation Control Modes |
|---|---|

Factory Setting: 0

| | | |
|---|---|---|
| Settings | 0 | 2-wire: FWD/STOP, REV/STOP |
| | 1 | 2-wire: FWD/REV, RUN/STOP |
| | 2 | 3-wire Operation |

There are three different types of control modes:

| 04.04 | External Terminal | |
|---|---|---|
| 0 | 2-wire<br>FWD /STOP<br>REV / STOP | 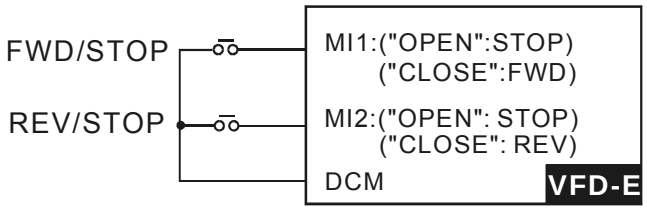 |
| 1 | 2-wire<br>FWD/ REV<br>RUN / STOP | 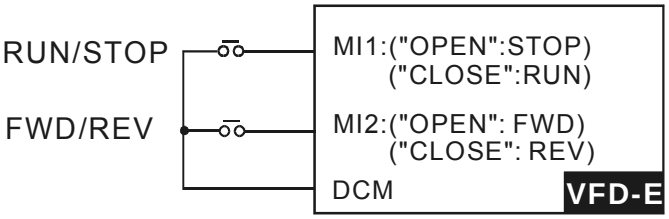 |

| 04.04 | External Terminal |
|---|---|
| 2 | 3-wire |

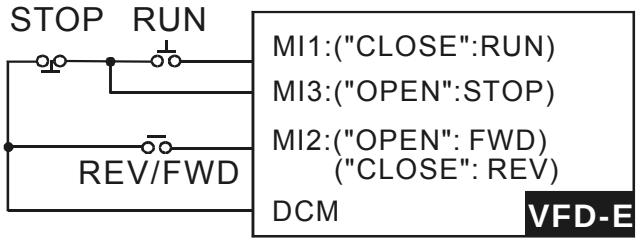


| 04.05 | Multi-function Input Terminal (MI3) |
|---|---|
| | Factory Setting: 1 |
| **04.06** | Multi-function Input Terminal (MI4) |
| | Factory Setting: 2 |
| **04.07** | Multi-function Input Terminal (MI5) |
| | Factory Setting: 3 |
| **04.08** | Multi-function Input Terminal (MI6) |
| | Factory Setting: 4 |

| Settings | Function | Description |
|---|---|---|
| 0 | No Function | Any unused terminals should be programmed to 0 to insure they have no effect on operation. |
| 1 | Multi-Step Speed Command 1 | These four inputs select the multi-speed defined by Pr.05.00 to Pr.05.14 as shown in the diagram at the end of this table.<br><br>**NOTE: Pr.05.00 to Pr.05.14 can also be used to control output speed by programming the AC motor drive's internal PLC function. There are 17 step speed frequencies (including Master Frequency and Jog Frequency) to select for application.** |
| 2 | Multi-Step Speed Command 2 | |
| 3 | Multi-Step Speed Command 3 | |
| 4 | Multi-Step Speed Command 4 | |
| 5 | External Reset | The External Reset has the same function as the Reset key on the Digital keypad. After faults such as O.H., O.C. and O.V. are cleared this input can be used to reset the drive. |

| Settings | Function | Description |
|---|---|---|
| 6 | Accel/Decel Inhibit | When the command is active, acceleration and deceleration is stopped and the AC motor drive maintains a constant speed. 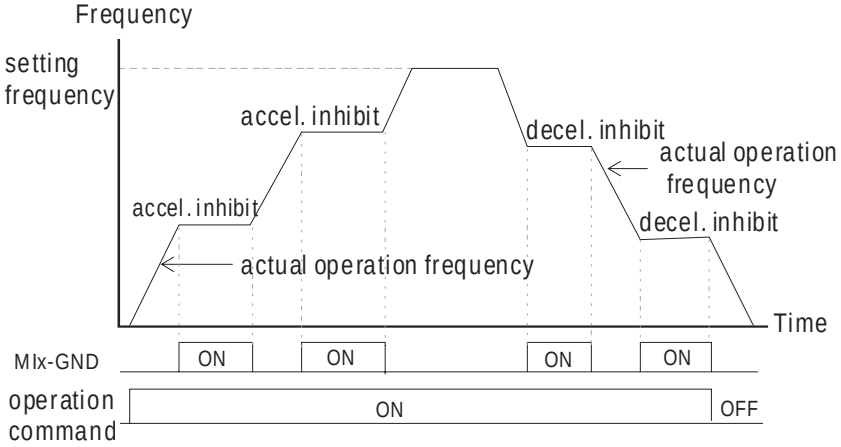  |
| 7 | Accel/Decel Time Selection Command | Used to select the one of 2 Accel/Decel Times (Pr.01.09 to Pr.01.12). 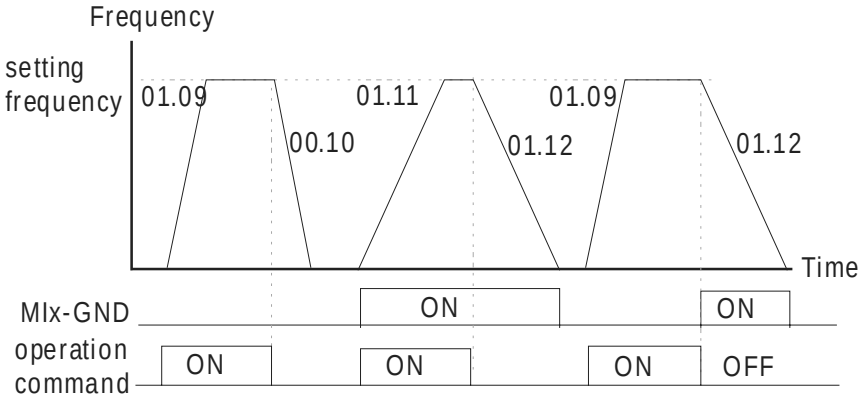  |
| 8 | Jog Operation Control | Parameter value 08 programs one of the Multi-function Input Terminals MI3 ~ MI6 (Pr.04.05~Pr.04.08) for Jog control.<br>**NOTE: Programming for Jog operation by 08 can only be done while the motor is stopped. (Refer to parameter Pr.01.13~Pr.01.15)** 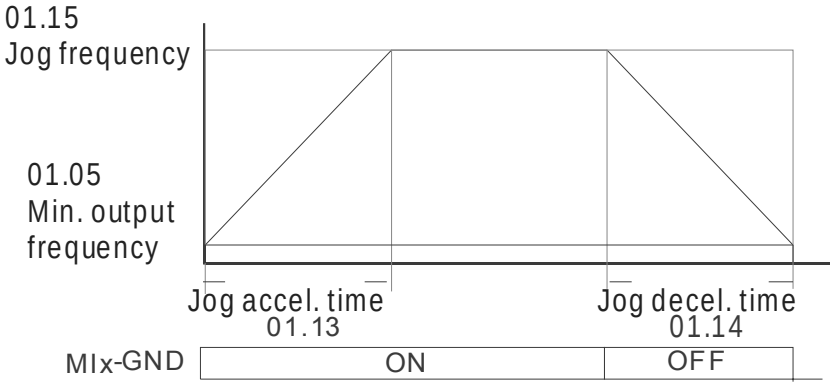  |

| Settings | Function | Description |
|---|---|---|
| 9 | External Base Block (Refer to Pr. 08.06) | Parameter value 09 programs a Multi-function Input Terminals for external Base Block control.<br>**NOTE: When a Base-Block signal is received, the AC motor drive will block all output and the motor will free run. When base block control is deactivated, the AC drive will start its speed search function and synchronize with the motor speed, and then accelerate to Master Frequency.**<br> 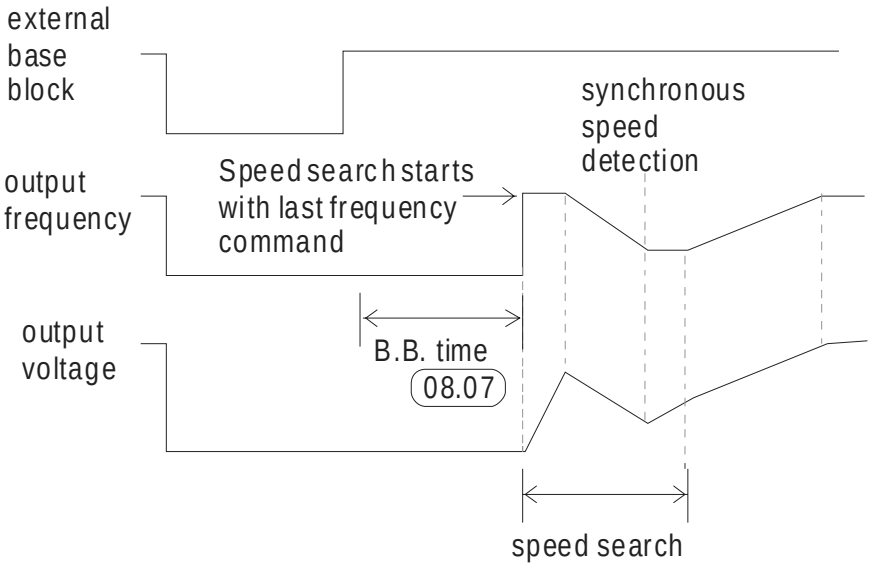 <br> |
| 10 | UP: Increase Master Frequency | Increase/decrease the Master Frequency each time an input is received or continuously when the input stays active. When both inputs are active at the same time, the Master Frequency increase/decrease is halted. Please refer to Pr.02.07, 02.08. This function is also called “motor potentiometer”. |
| 11 | DOWN: Decrease Master Frequency | |
| 12 | Counter Trigger | Parameter value 12 programs one of the Multi-function Input Terminals MI3~MI6 (Pr.04.05~Pr.04.08) to increment the AC drive’s internal counter. When an input is received, the counter is incremented by 1. |
| 13 | Counter Reset | When active, the counter is reset and inhibited. To enable counting the input should be OFF. Refer to Pr.03.05 and 03.06. |

| Settings | Function | Description |
|---|---|---|
| 14 | External Fault | Parameter value 14 programs one of the Multi-function Input Terminals MI3~MI6 (Pr.04.05~Pr.04.08) to be External Fault (E.F.) inputs.<br> 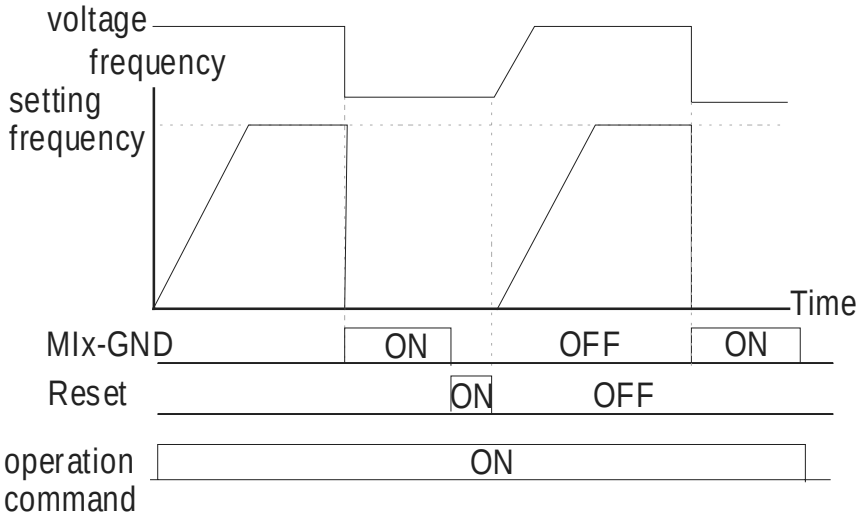 <br> |
| 15 | PID function disabled | When an input ON with this setting is ON, the PID function will be disabled. |
| 16 | Output Shutoff Stop | AC motor drive will stop output and the motor free run if one of these settings is enabled. If the status of terminal is changed, AC motor drive will restart from 0Hz.<br> 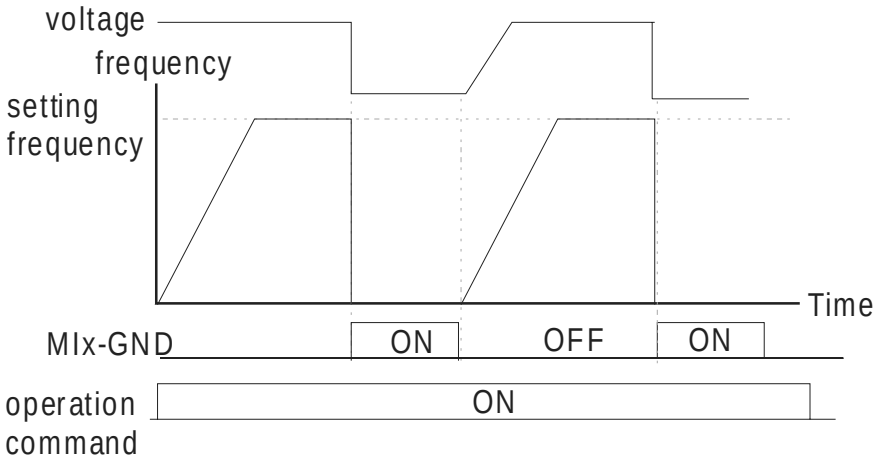 <br> |
| 17 | Parameter lock enable | When this setting is enabled, all parameters will be locked and write parameters is disabled. |

| Settings | Function | Description |
|---|---|---|
| 18 | Operation Command Selection (Pr.02.01 setting/external terminals) | ON: Operation command via Ext. Terminals<br>OFF: Operation command via Pr.02.01 setting<br>When the settings 18, 19 and 20 are ON at the same time, the priority should be setting 18 > setting19 > setting20. |
| 19 | Operation Command Selection (Pr 02.01 setting/Digital Keypad) | ON: Operation command via Digital Keypad<br>OFF: Operation command via Pr.02.01 setting<br>When the settings 18, 19 and 20 are ON at the same time, the priority should be setting 18 > setting19 > setting20. |
| 20 | Operation Command Selection (Pr 02.01 setting/ Communication) | ON: Operation command via Communication<br>OFF: Operation command via Pr.02.01 setting<br>When the settings 18, 19 and 20 are ON at the same time, the priority should be setting 18 > setting19 > setting20. |
| 21 | Forward/Reverse | This function has top priority to set the direction for running (If “Pr.02.04=0”) |
| 22 | Source of second frequency command enabled | Used to select the first/second frequency command source. Refer to Pr.02.00 and 02.09.<br>ON: 2nd Frequency command source<br>OFF: 1st Frequency command source |
| 23 | Run/Stop PLC Program (PLC1)<br>(NOT for VFD*E*C models) | ON: Run PLC Program<br>OFF: Stop PLC Program<br>When AC motor drive is in STOP mode and this function is enabled, it will display PLC1 in the PLC page and execute PLC program. When this function is disabled, it will display PLC0 in the PLC page and stop executing PLC program. The motor will be stopped by Pr.02.02.<br>When operation command source is external terminal, the keypad cannot be used to change PLC status. And this function will be invalid when the AC Motor drive is in PLC2 status. |

| Settings | Function | Description |
|---|---|---|
| 23 | Quick Stop<br>(ONLY for VFD*E*C models) | It is only valid when Pr.02.01 is set to 5 in VFD*E*C models. |
| 24 | Download/Execute/ Monitor PLC Program (PLC2)<br>(NOT for VFD*E*C models) | When AC motor drive is in STOP mode and this function is enabled, it will display PLC2 in the PLC page and you can download/execute/monitor PLC. When this function is disabled, it will display PLC0 in the PLC page and stop executing PLC program. The motor will be stopped by Pr.02.02.<br>When operation command source is external terminal, the keypad cannot be used to change PLC status. And this function will be invalid when the AC Motor drive is in PLC1 status. |
| 25 | Simple position function | This function should be used with Pr.01.20~Pr.01.25 for simple position. Refer to Pr.01.25 for details. |
| 26 | OOB (Out of Balance Detection) | The OOB (Out Of Balance Detection) function can be used with PLC for washing machine. When this setting is enabled, it will get Δθ value from the settings of Pr.08.21 and Pr.08.22. PLC or host controller will decide the motor speed by this t Δθ value (Pr.08.23) |
| 27 | Motor selection (bit 0) | When this setting is enabled, it can be used for motor selection (Pr. 01.01~01.06, 01.26~01.43, 07.18~07.38, 07.00~07.06).<br>For example: MI1=27, MI2=28<br>When MI1 and MI2 are OFF, it selects motor 0.<br>When MI1 is ON and MI2 is OFF, it selects motor 1.<br>When MI1 is OFF and MI2 is ON, it selects motor 2.<br>When MI1 and MI2 are ON, it selects motor 3. |
| 28 | Motor selection (bit 1) | |

## Multi-Step Speed

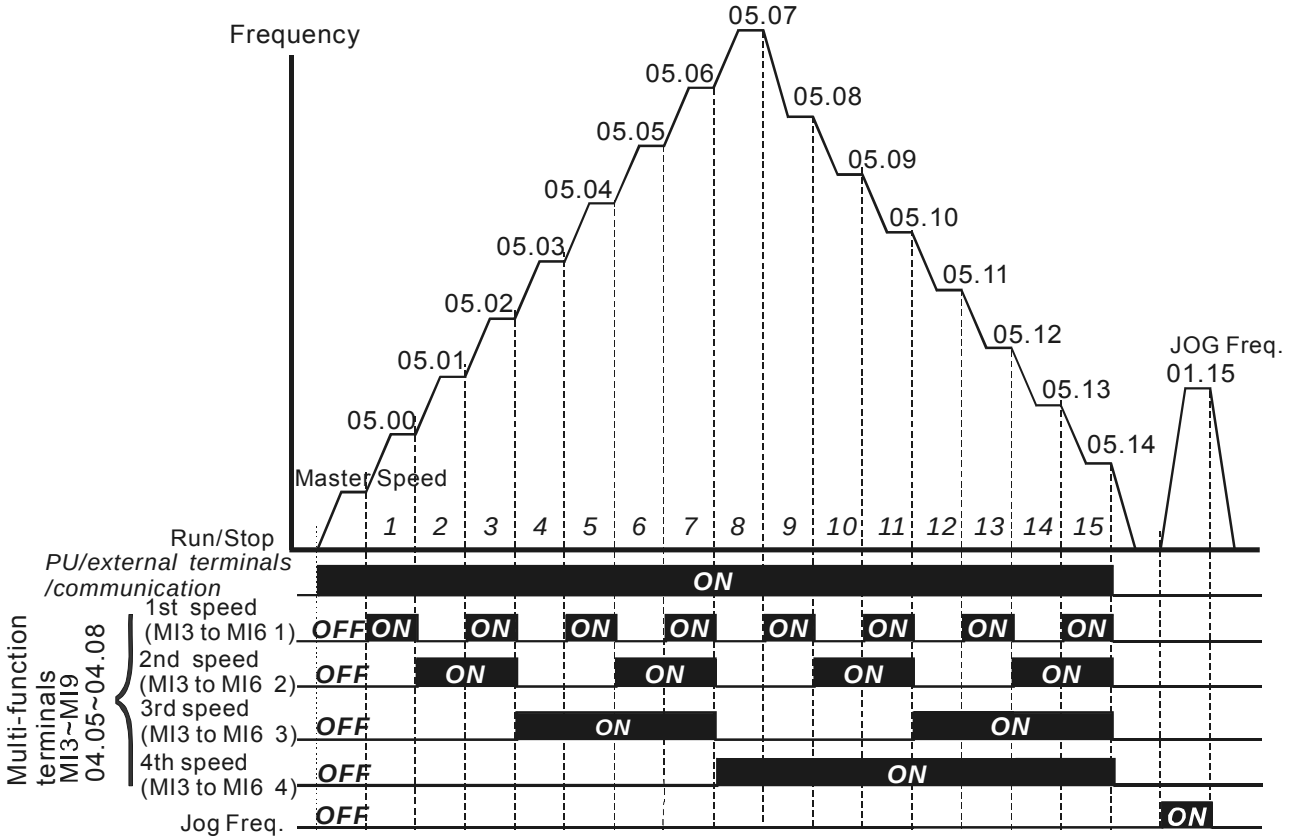


**Multi-speed via External Terminals**

| | MI6=4 | MI5=3 | MI4=2 | MI3=1 |
|---|---|---|---|---|
| Master frequency | OFF | OFF | OFF | OFF |
| 1st speed | OFF | OFF | OFF | ON |
| 2nd speed | OFF | OFF | ON | OFF |
| 3rd speed | OFF | OFF | ON | ON |
| 4th speed | OFF | ON | OFF | OFF |
| 5th speed | OFF | ON | OFF | ON |
| 6th speed | OFF | ON | ON | OFF |
| 7th speed | OFF | ON | ON | ON |
| 8th speed | ON | OFF | OFF | OFF |
| 9th speed | ON | OFF | OFF | ON |
| 10th speed | ON | OFF | ON | OFF |
| 11th speed | ON | OFF | ON | ON |
| 12th speed | ON | ON | OFF | OFF |
| 13th speed | ON | ON | OFF | ON |
| 14th speed | ON | ON | ON | OFF |
| 15th speed | ON | ON | ON | ON |

| **04.09** | Multi-function Input Contact Selection |
|---|---|

Settings 0 to 4095 Factory Setting: 0

- This parameter can be used to set the status of multi-function terminals (MI1~MI6 (N.O./N.C.) for standard AC motor drive).
- The MI1~MI3 setting will be invalid when the operation command source is external terminal (2/3wire).

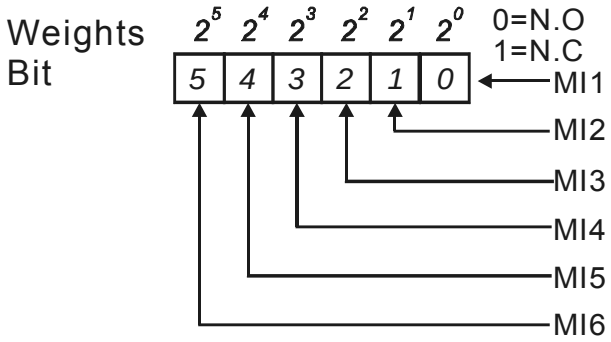


- The Setting method: It needs to convert binary number (6-bit) to decimal number for input.
- For example: if setting MI3, MI5, MI6 to be N.C. and MI1, MI2, MI4 to be N.O. The setting value Pr.04.09 should be bit5X$2^5$+bit4X$2^4$+bit2X$2^2$= 1X$2^5$+1X$2^4$+1X$2^2$= 32+16+4=52 as shown in the following.

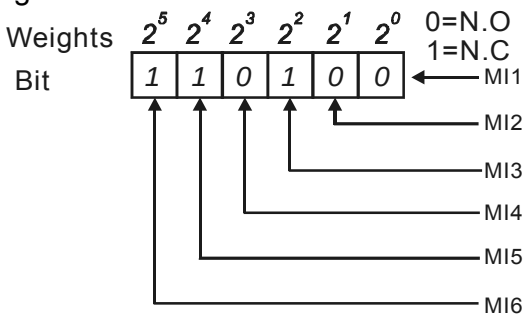


The setting value
= bit5x$2^5$+bit4x$2^4$+bit2x$2^2$
= 1x$2^5$+1x$2^4$+1x$2^2$
=32+16+4 =52
Setting 04.09

NOTE:
$2^{14}$=16384 $2^{13}$=8192 $2^{12}$=4096 $2^{11}$=2048 $2^{10}$=1024
$2^9$=512 $2^8$=256 $2^7$=128 $2^6$=64 $2^5$=32
$2^4$=16 $2^3$=8 $2^2$=4 $2^1$=2 $2^0$=1

- When extension card is installed, the number of the multi-function input terminals will increase according to the extension card. The maximum number of the multi-function input terminals is shown as follows.

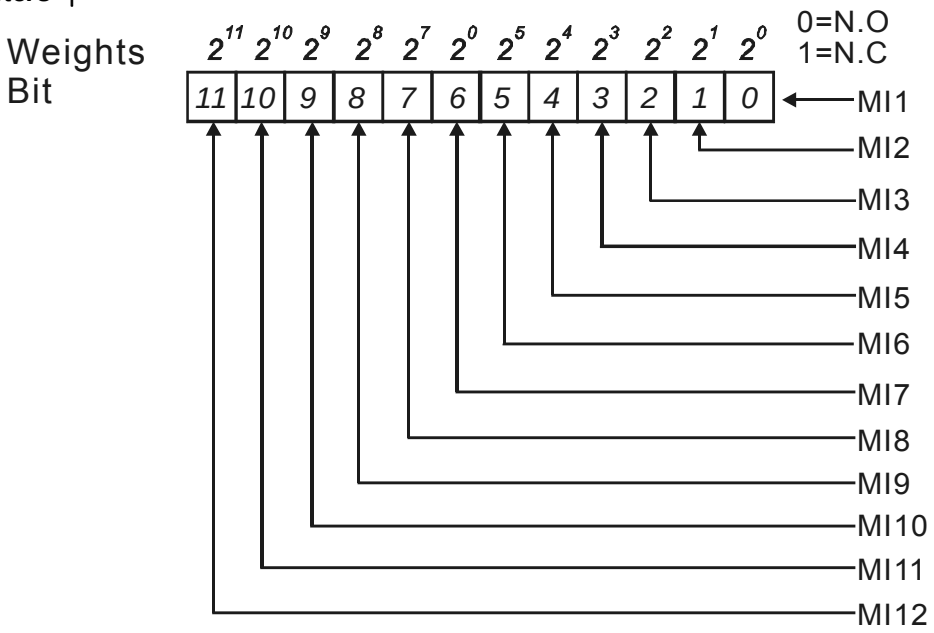


| **04.10** | Digital Terminal Input Debouncing Time | Unit: 2ms |
|---|---|---|
| Settings | 1 to 20 | Factory Setting: 1 |

- This parameter is used to set the response time of digital input terminals MI1~MI6.
- This parameter is to delay the signals on digital input terminals. 1 unit is 2 msec, 2 units are 4 msec, etc. The delay time is to debounce noisy signals that could cause the digital terminals to malfunction.
- The AC motor drive will check the status of multi-function input terminals every 2ms. It will only confirm the command and change the status when the input terminals status is changed. Thus, the delay time from command input to execution is 2msec+ (Pr.04.10+1) X 2ms. Suppose that Pr.04.10 is set to 4, the delay time will be 12ms.

| **04.24** | The Digital Input Used by PLC (NOT for VFD*E*C models) | |
|---|---|---|
| Settings | Read Only | Factory display: 0 |
| Display | Bit0=1: MI1 used by PLC | |
| | Bit1=1: MI2 used by PLC | |
| | Bit2=1: MI3 used by PLC | |
| | Bit3=1: MI4 used by PLC | |
| | Bit4=1: MI5 used by PLC | |
| | Bit5=1: MI6 used by PLC | |
| | Bit6=1: MI7 used by PLC | |
| | Bit7=1: MI8 used by PLC | |
| | Bit8=1: MI9 used by PLC | |
| | Bit9=1: MI10 used by PLC | |
| | Bit10=1: MI11 used by PLC | |
| | Bit11=1: MI12 used by PLC | |

For standard AC motor drive (without extension card), the equivalent 6-bit is used to display the status (used or not used) of each digital input. The value for Pr.04.24 to display is the result after converting 6-bit binary into decimal value.

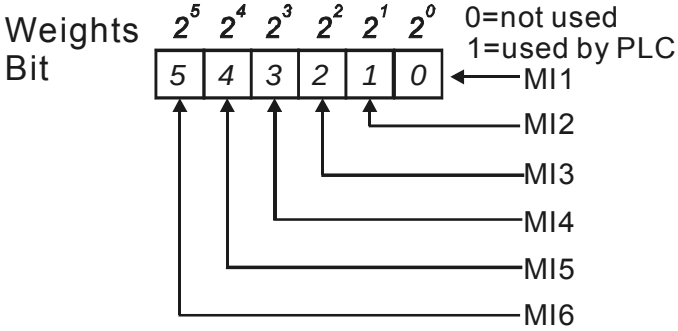


For example: when Pr.04.24 is set to 52 (decimal) = 110100 (binary) that indicates MI3, MI5 and MI6 are used by PLC.

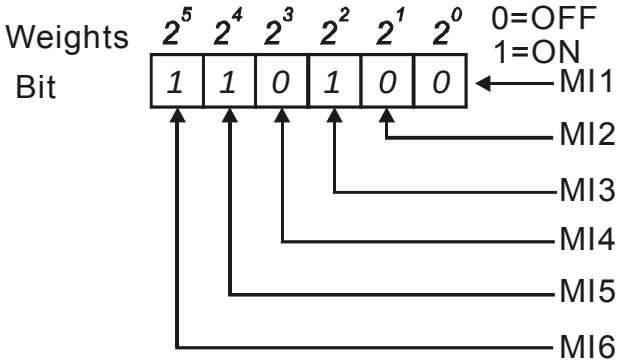


When extension card is installed, the number of the digital input terminals will increase according to the extension card. The maximum number of the digital input terminals is shown as follows.

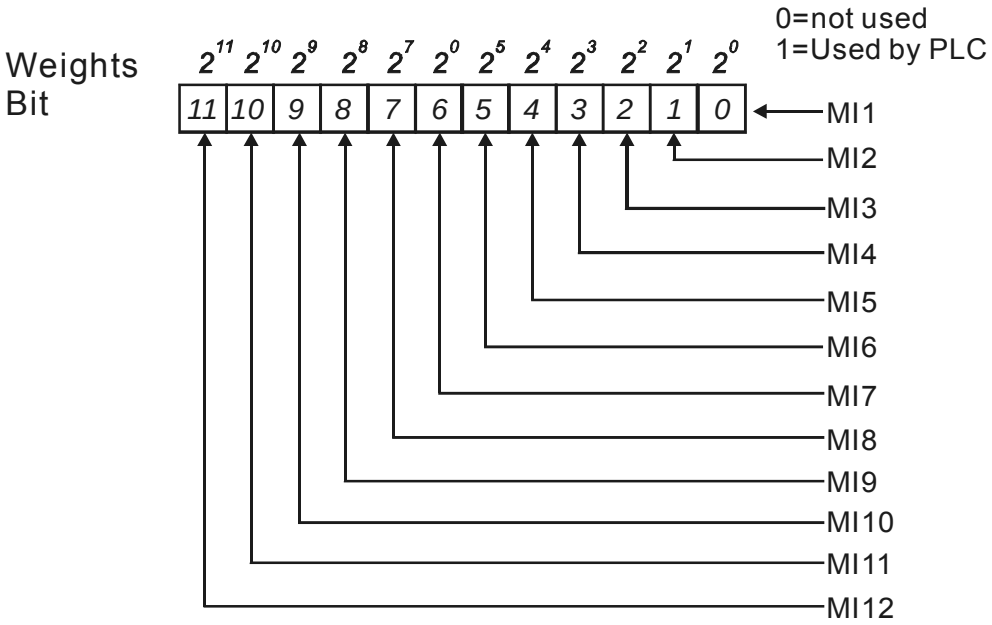

| 04.25 | The Analog Input Used by PLC (NOT for VFD*E*C models) | |
|---|---|---|
| Settings | Read Only | Factory display: 0 |
| Display | Bit0=1: AVI used by PLC | |
| | Bit1=1: ACI/AVI2 used by PLC | |
| | Bit2=1: AI1 used by PLC | |
| | Bit3=1: AI2 used by PLC | |

The equivalent 2-bit is used to display the status(used or not used) of each analog input. The value for Pr.04.25 to display is the result after converting 2-bit binary into decimal value.

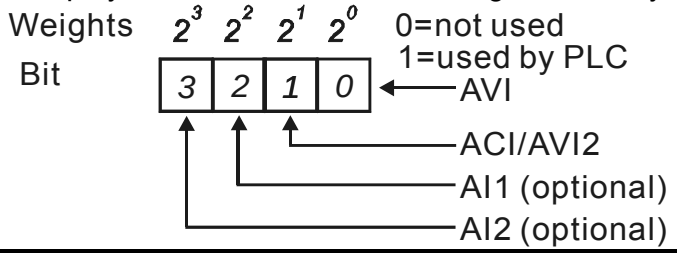


| 04.26 | Display the Status of Multi-function Input Terminal | |
|---|---|---|
| Settings | Read Only | Factory display: ## |
| Display | Bit0: MI1 Status | |
| | Bit1: MI2 Status | |
| | Bit2: MI3 Status | |
| | Bit3: MI4 Status | |
| | Bit4: MI5 Status | |
| | Bit5: MI6 Status | |
| | Bit6: MI7 Status | |
| | Bit7: MI8 Status | |
| | Bit8: MI9 Status | |
| | Bit9: MI10 Status | |
| | Bit10: MI11 Status | |
| | Bit11: MI12 Status | |

The multi-function input terminals are falling-edge triggered. For standard AC motor drive (without extension card), there are MI1 to MI6 and Pr.04.26 will display 63 (111111) for no action.

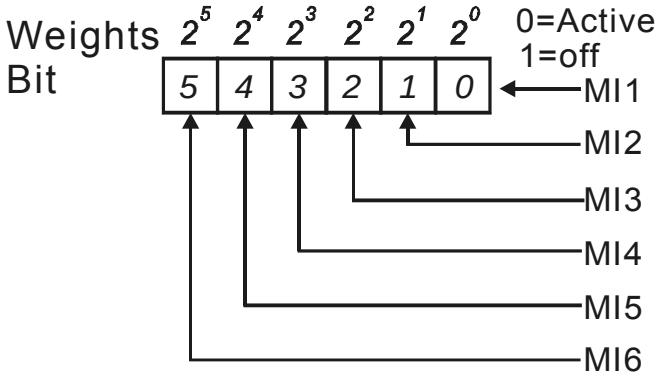


For Example:
If Pr.04.26 displays 52, it means MI1, MI2 and MI4 are active.
The display value 52= 32+16+4 =1 X $2^5$+ 1X $2^4$ + 1X $2^2$ = bit 6 X $2^5$+ bit 5 X $2^4$ + bit 3 X $2^2$

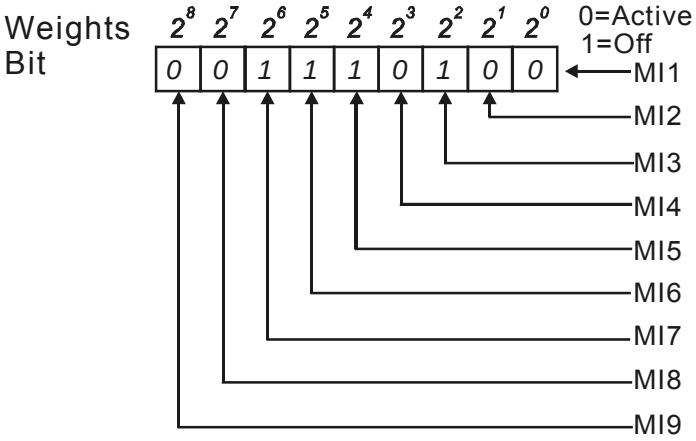


When extension card is installed, the number of the multi-function input terminals will increase according to the extension card. The maximum number of the multi-function input terminals is shown as follows.

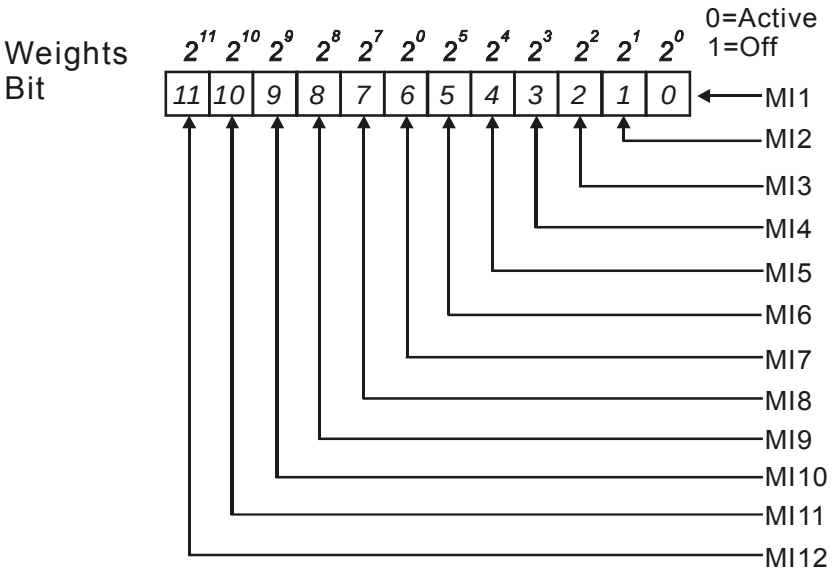

| **04.27** | Internal/External Multi-function Input Terminals Selection | |
|---|---|---|
| Settings | 0 to 4095 | Factory Setting: 0 |

- This parameter is used to select the terminals to be internal terminal or external terminal. You can activate internal terminals by Pr.04.28. A terminal cannot be both internal terminal and external terminal at the same time.
- For standard AC motor drive (without extension card), the multi-function input terminals are MI1 to MI6 as shown in the following.

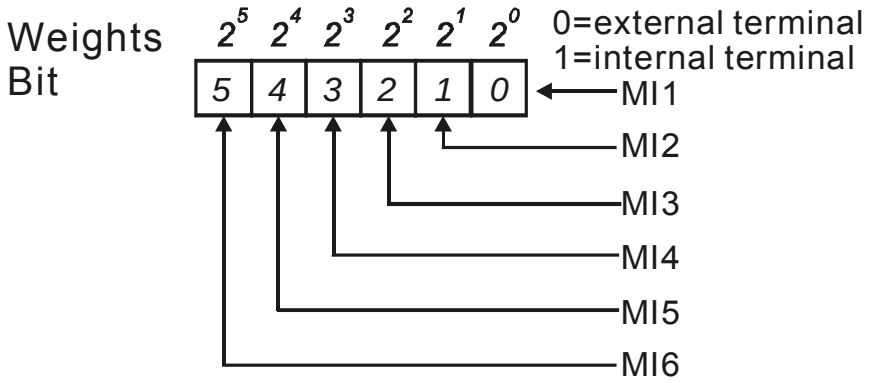


- The Setting method is convert binary number to decimal number for input.
- For example: if setting MI3, MI5, MI6 to be internal terminals and MI1, MI2, MI4 to be external terminals. The setting value should be bit5X$2^5$+bit4X$2^4$+bit2X$2^2$= 1X$2^5$+1X$2^4$+1X$2^2$= 32+16+4=52 as shown in the following.

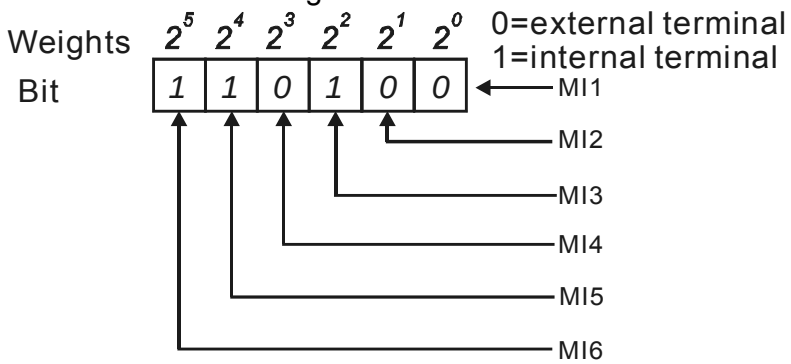


- When extension card is installed, the number of the multi-function input terminals will increase according to the extension card. The maximum number of the multi-function input terminals is shown as follows.

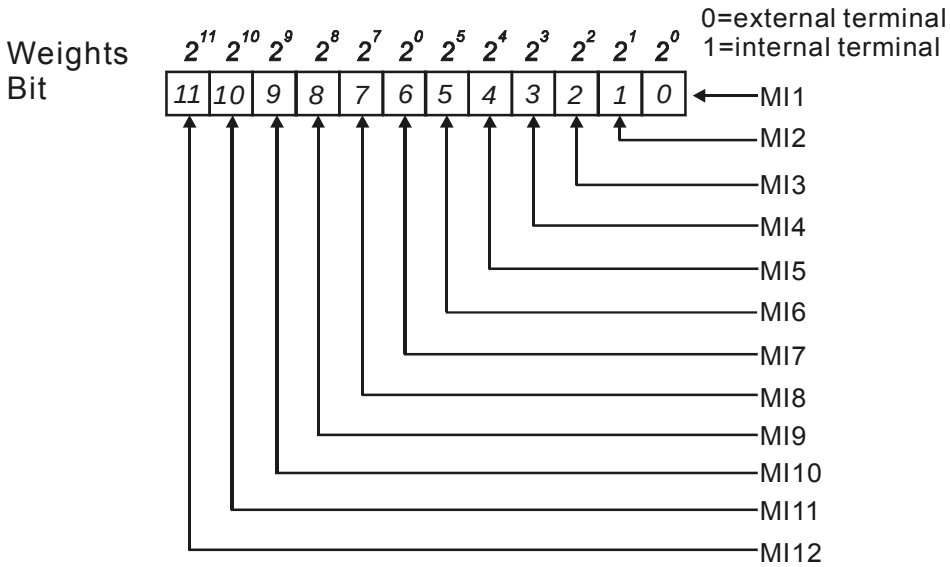

| 04.28 | ✓Internal Terminal Status | |
|---|---|---|
| Settings | 0 to 4095 | Factory Setting: 0 |

This parameter is used to set the internal terminal action via keypad(optional), communication or PLC.

For standard AC motor drive (without extension card), the multi-function input terminals are MI1 to MI6 as shown in the following.

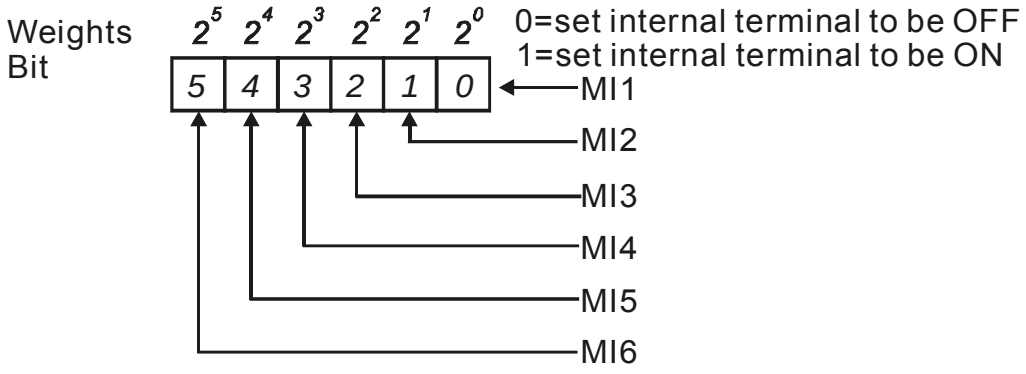


For example, if setting MI3, MI5 and MI6 to be ON, Pr.04.28 should be set to bit5X$2^5$+bit4X$2^4$+bit2X$2^2$= 1X$2^5$+1X$2^4$+1X$2^2$= 32+16+4=52 as shown in the following.

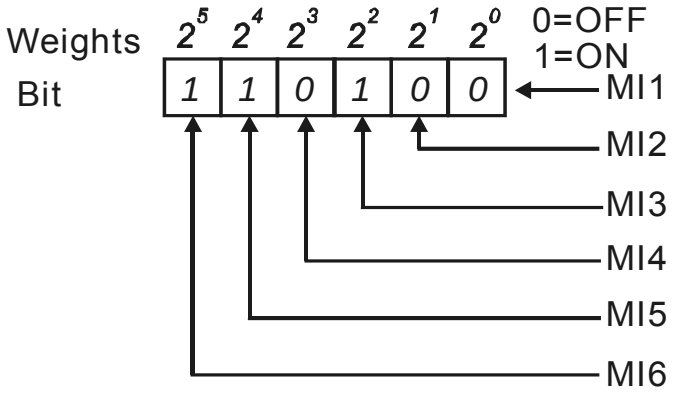


When extension card is installed, the number of the multi-function input terminals will increase according to the extension card. The maximum number of the multi-function input terminals is shown as follows.

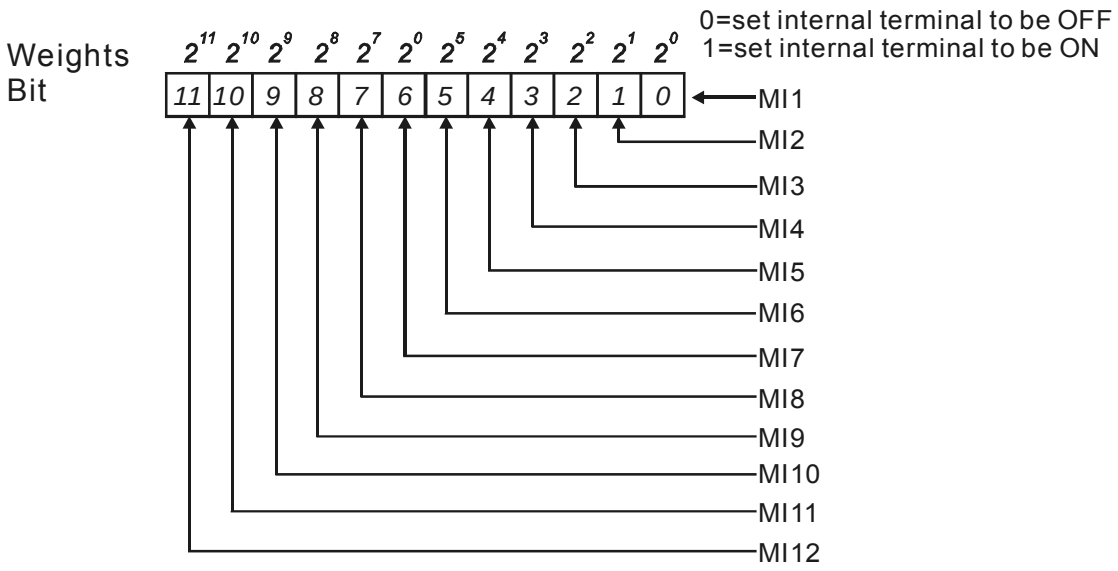


| **04.29** | ACI Filter Time | |
|---|---|---|
| Settings | 0 ~ 9999 (*2ms) | Factory Setting: 50 |

# Group 5: Multi-step Speeds Parameters

| | | |
|---|---|---|
| **05.00** | ✓1st Step Speed Frequency | Unit: Hz |
| **05.01** | ✓2nd Step Speed Frequency | Unit: Hz |
| **05.02** | ✓3rd Step Speed Frequency | Unit: Hz |
| **05.03** | ✓4th Step Speed Frequency | Unit: Hz |
| **05.04** | ✓5th Step Speed Frequency | Unit: Hz |
| **05.05** | ✓6th Step Speed Frequency | Unit: Hz |
| **05.06** | ✓7th Step Speed Frequency | Unit: Hz |
| **05.07** | ✓8th Step Speed Frequency | Unit: Hz |
| **05.08** | ✓9th Step Speed Frequency | Unit: Hz |
| **05.09** | ✓10th Step Speed Frequency | Unit: Hz |
| **05.10** | ✓11th Step Speed Frequency | Unit: Hz |
| **05.11** | ✓12th Step Speed Frequency | Unit: Hz |
| **05.12** | ✓13th Step Speed Frequency | Unit: Hz |
| **05.13** | ✓14th Step Speed Frequency | Unit: Hz |
| **05.14** | ✓15th Step Speed Frequency | Unit: Hz |

Settings 0.00 to 600.00Hz Factory Setting: 0.00
(Japanese version: 0.00 to 599.00 Hz )

- The Multi-function Input Terminals (refer to setting 1~4 of Pr.04.05 to 04.08) are used to select one of the AC motor drive Multi-step speeds(max. 15 speeds). The speeds (frequencies) are determined by Pr.05.00 to 05.14 as shown in the following.
- The operation time of multi-step speeds can be set by PLC program.
- The run/stop command can be controlled by the external terminal/digital keypad/communication via Pr.02.01.
- Each one of multi-step speeds can be set within 0.0~600.00Hz (Japanese version: 0.00 to 599.00 Hz ) during operation.
- These parameters can be applied in small machinery, food processing machinery, washing equipment to control the operation procedure. It can be used instead of traditional circuit, such as relay, switch or counter.
- Explanation for the timing diagram for multi-step speeds and external terminals
  The Related parameter settings are:
  1. Pr.05.00~05.14: setting multi-step speeds (to set the frequency of each step speed)
  2. Pr.04.05~04.08: setting multi-function input terminals (multi-step speed 1~4)
  3. The repeat operation setting of 1st-15th step speed frequency: can use PLC program to control. Please refer to Appendix D How to use PLC function for details.
  4. The operation direction setting of 1st-15th step speed frequency: can use PLC program to control. Please refer to Appendix D How to use PLC function for details.
  5. The operation time setting of 1st-15th step speed frequency: can use PLC program to control. Please refer to Appendix D How to use PLC function for details.
  Operations:
  Once the AC motor drive receives “RUN” command, it will operate by parameters settings and PLC program till the 15th step speed frequency is completed.
- If it is repeat operation by PLC program, the AC motor drive will operate by the settings from Pr.05.00➔Pr.05.01➔…. ➔ Pr.05.14➔Pr.05.00➔Pr.05.01..till the operation command is OFF.

Related parameters: Pr.01.15(Jog Frequency), Pr.01.07(Output Frequency Upper Limit), Pr.01.08(Output Frequency Lower Limit), Pr.04.05(Multi-function Input Terminal (MI3)), Pr.04.06(Multi-function Input Terminal (MI4)), Pr.04.07(Multi-function Input Terminal (MI5)) and Pr.04.08(Multi-function Input Terminal (MI6))

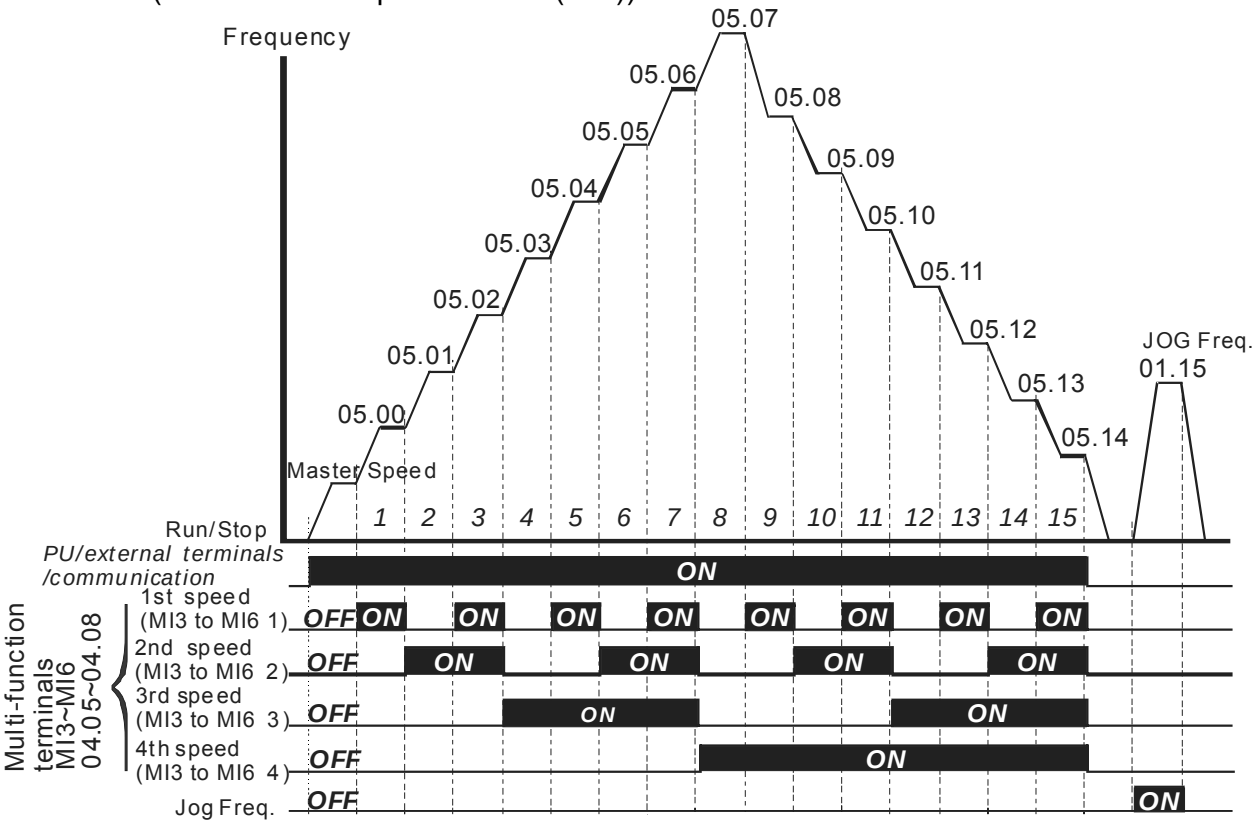


**Multi-speed via External Terminals**

| | MI6=4 | MI5=3 | MI4=2 | MI3=1 |
|---|---|---|---|---|
| Master frequency | OFF | OFF | OFF | OFF |
| 1st speed | OFF | OFF | OFF | ON |
| 2nd speed | OFF | OFF | ON | OFF |
| 3rd speed | OFF | OFF | ON | ON |
| 4th speed | OFF | ON | OFF | OFF |
| 5th speed | OFF | ON | OFF | ON |
| 6th speed | OFF | ON | ON | OFF |
| 7th speed | OFF | ON | ON | ON |
| 8th speed | ON | OFF | OFF | OFF |
| 9th speed | ON | OFF | OFF | ON |
| 10th speed | ON | OFF | ON | OFF |
| 11th speed | ON | OFF | ON | ON |
| 12th speed | ON | ON | OFF | OFF |
| 13th speed | ON | ON | OFF | ON |
| 14th speed | ON | ON | ON | OFF |
| 15th speed | ON | ON | ON | ON |

# Group 6: Protection Parameters

| **06.00** | Over-Voltage Stall Prevention | | Unit: V |
|---|---|---|---|
| Settings | 115V/230V series | 330.0 to 410.0V | Factory Setting: 390.0 |
| | 460V series | 660.0 to 820.0V | Factory Setting: 780.0 |
| | 0 | Disable Over-voltage Stall Prevention (with brake unit or brake resistor) | |

- During deceleration, the DC bus voltage may exceed its Maximum Allowable Value due to motor regeneration. When this function is enabled, the AC motor drive will not decelerate further and keep the output frequency constant until the voltage drops below the preset value again.
- With moderate inertia load, over-voltage stall prevention will not occur and the real deceleration time will be equal to the setting of deceleration time. The AC drive will automatically extend the deceleration time with high inertia loads. If the deceleration time is critical for the application, a brake resistor or brake unit should be used.
- When the function of over-voltage stall prevention is activated, the deceleration time of the AC motor drive will be larger than the setting.
- When the deceleration time is obstruction in the application, it is not suitable to use this function. The solution are:
  1. moderate increase the deceleration time
  2. used with a brake resistor (refer to appendix B for details) to consume the regenerative energy by heat.
- Related parameters: Pr.01.10(Decel Time 1), Pr.01.12(Decel Time 2), Pr.03.00(Multi-function Output Relay (RA1, RB1, RC1)) and Pr.03.01(Multi-function Output Terminal MO1)

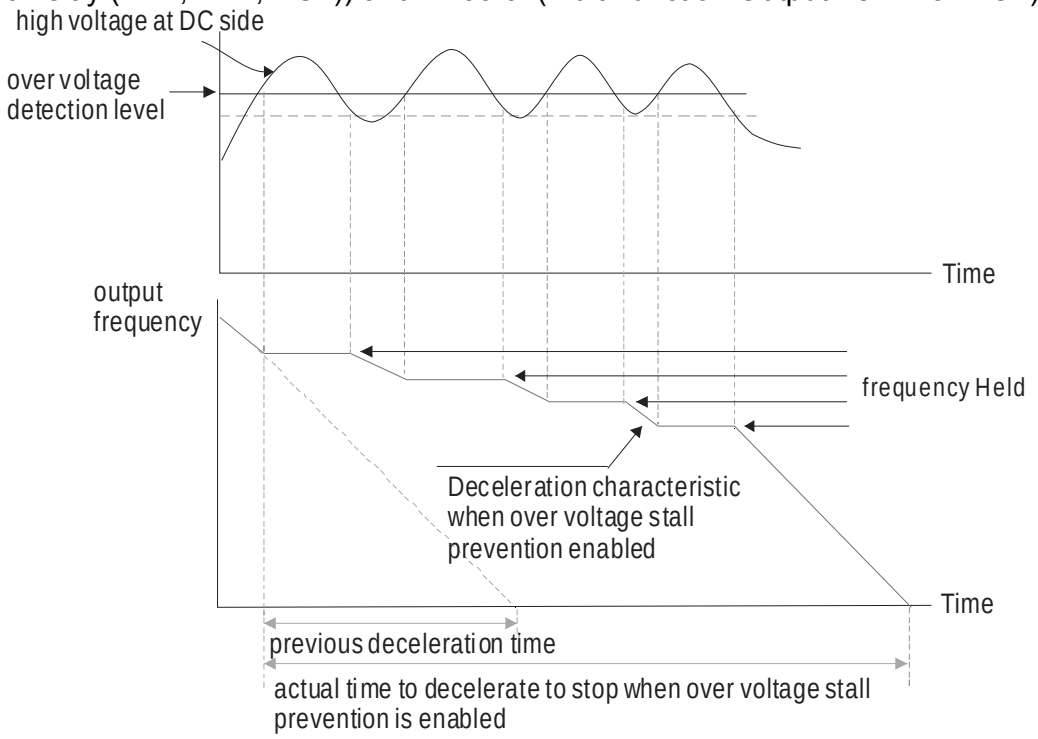

| 06.01 | Over-Current Stall Prevention during Acceleration | Unit: % |
|---|---|---|

Settings 20 to 250% Factory Setting: 170

0: disable

- A setting of 100% is equal to the Rated Output Current of the drive.
- During acceleration, the AC drive output current may increase abruptly and exceed the value specified by Pr.06.01 due to rapid acceleration or excessive load on the motor. When this function is enabled, the AC drive will stop accelerating and keep the output frequency constant until the current drops below the maximum value.
- When it stalls due to the small motor power or operate with factory setting, please decrease the setting of Pr.06.01.
- When the acceleration time is obstruction in the application, it is not suitable to use this function. The solution are:
  1. moderate increase the acceleration time
  2. setting Pr.01.16 (Auto acceleration / deceleration (refer to Accel/Decel time setting)) to 1, 3 or 4.
- Related parameters: Pr.01.09(Accel Time 1), Pr.01.11(Accel Time 2), Pr.01.16(Auto acceleration / deceleration (refer to Accel/Decel time setting)), Pr.03.00(Multi-function Output Relay (RA1, RB1, RC1)), Pr.03.01(Multi-function Output Terminal MO1) and Pr.06.03(Over-Torque Detection Mode (OL2))

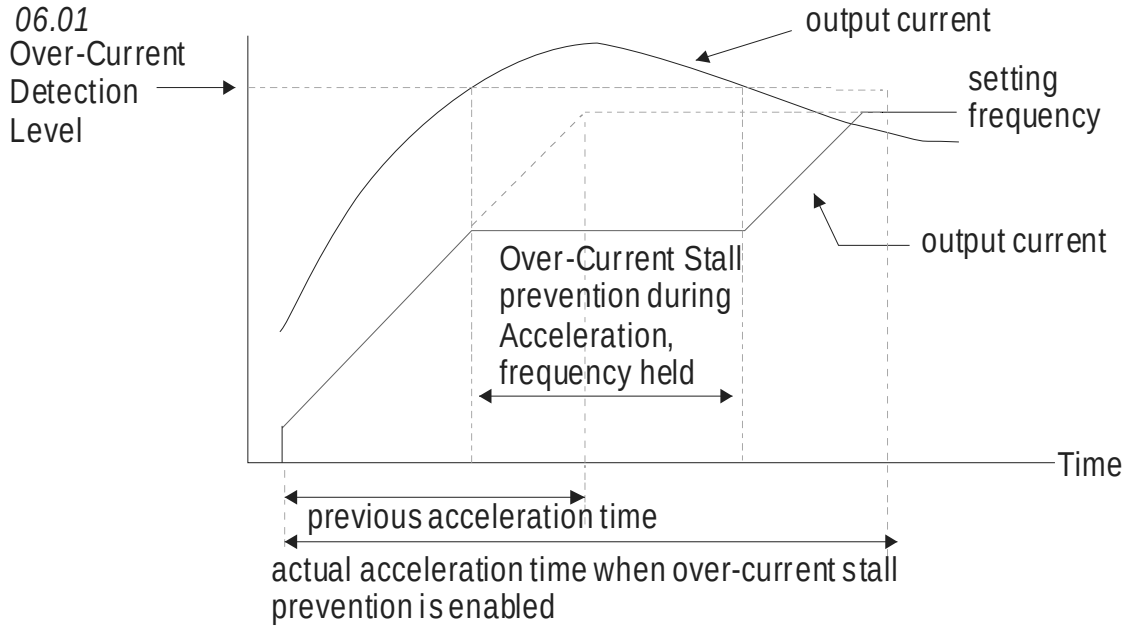


| 06.02 | Over-current Stall Prevention during Operation | Unit: % |
|---|---|---|

Settings 20 to 250% Factory Setting: 170

0: disable

- The over-current stall prevention during operation function is a protection. When the motor runs with constant speed, the AC motor drive will decrease the output frequency automatically when momentary overload.
- If the output current exceeds the setting specified in Pr.06.02 when the drive is operating, the drive will decrease its output frequency by Pr.01.10/Pr.01.12 to prevent the motor stall. If the output current is lower than (Pr.06.02 setting –rated current X 5%), the drive will accelerate again by Pr.01.09/Pr.01.11 to catch up with the set frequency command value.

Related parameter: Pr.06.03 Over-Torque Detection Mode (OL2)

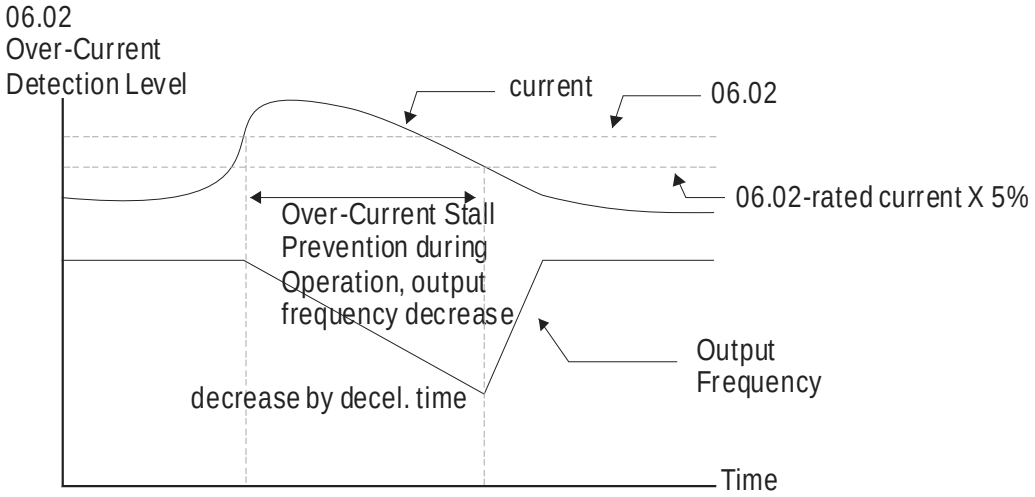


over-current stall prevention during operation

**NOTE**

Please do not set the over-current stall prevention to a small value to prevent over-low torque.

| **06.03** | Over-Torque Detection Mode (OL2) |
|---|---|

Factory Setting: 0

| | | |
|---|---|---|
| Settings | 0 | Over-Torque detection disabled. |
| | 1 | Over-Torque detection enabled during constant speed operation. After over-torque is detected, keep running until OL1 or OL occurs. |
| | 2 | Over-Torque detection enabled during constant speed operation. After over-torque is detected, stop running. |
| | 3 | Over-Torque detection enabled during acceleration. After over-torque is detected, keep running until OL1 or OL occurs. |
| | 4 | Over-Torque detection enabled during acceleration. After over-torque is detected, stop running. |

This parameter determines the operation mode of the drive after the over-torque (OL2)

This parameter determines the operation mode of the drive after the over-torque (OL2) is detected via the following method:

1. if the output current exceeds the over-torque detection level (Pr.06.04) and the detection time is longer than the setting of Pr.06.05 Over-Torque Detection Time, the warning message “OL2” is displayed on digital keypad (optional). It needs to press “RESET” to clear the warning message.
2. If a Multi-function Output Terminal is set to over-torque detection (Pr.03.00~03.01=04), the output is on. Please refer to Pr.03.00~03.01 for details.

Setting 1 or 2: it is used to detect with constant speed. For setting 2, it will free run to stop after over-torque is detected.

Setting 3 or 4: it is used to detect during acceleration. For setting 4, it will free run to stop after over-torque is detected.

Related parameters: Pr.03.00(Multi-function Output Relay (RA1, RB1, RC1)), Pr.03.01(Multi-function Output Terminal MO1), Pr.06.01(Over-Current Stall Prevention during Accel), Pr.06.02(Over-Current Stall Prevention during Operation) Pr.06.04(Over-Torque Detection Level) and Pr.06.05(Over-Torque Detection Time)

| **06.04** | ✓Over-Torque Detection Level (OL2) | Unit: % |
|---|---|---|
| | Settings 10 to 200% | Factory Setting: 150 |

| **06.05** | Over-Torque Detection Time (OL2) | Unit: second |
|---|---|---|
| | Settings 0.1 to 60.0 sec | Factory Setting: 0.1 |

- Pr.06.04 is proportional to the Rated Output Current of the drive.
- Pr.06.05 sets the time for how long over-torque must be detected before “OL2” is displayed.
- The method to detect over-torque is shown as follows:
  1. when output current exceeds over-torque detection level (Pr.06.04)
  2. when over-torque time exceeds over torque detection time (Pr.06.05)

  If a Multi-function Output Terminal is set to over-torque detection (Pr.03.00~03.01=04), the output is on. Please refer to Pr.03.00~03.01 for details.
- For general motor, the output torque and output current of the AC motor drive will in proportion in V/f control. Thus, it can use the output current of the AC motor drive to limit the output torque of motor.
- Related parameters: Pr.03.00(Multi-function Output Relay (RA1, RB1, RC1)) and Pr.03.01(Multi-function Output Terminal MO1)

| **06.06** | Electronic Thermal Overload Relay Selection (OL1) |
|---|---|
| | Factory Setting: 2 |

| | | |
|---|---|---|
| Settings | 0 | Operate with a Standard Motor (self-cooled by fan) |
| | 1 | Operate with a Special Motor (forced external cooling) |
| | 2 | Operation disabled |

- This parameter is used to set the operation selection of the electronic thermal overload relay.
- This function is used to protect the motor from overloading or overheating. When the motor (self-cooled by fan) operates in low frequency, overload is seldom happened. Refer to the following figure for the application.
- When the rated current of motor is less than drive’s or bad design of the motor heat dissipation, it can use this parameter to limit the output current of the AC motor drive to prevent motor from overheating or damage.
- Setting 0: the electronic thermal relay is used for standard motor(heatsink is fixed on rotor shaft). When operating in low speed, the motor heat dissipation function will be bad. Thus, it needs to decrease the action time of the electronic thermal relay to ensure the motor life.
- Setting 1: the electron thermal relay is used for special motor(heatsink uses independent power). The heat dissipation function has no direction relation with rotation speed. Thus, the electronic thermal relay is still held in low speed to ensure the motor load ability in low speed.
- In the frequent power ON/OFF applications, it can’t use this parameter (even set to 0 or 1) for protection due to this function will be reset once the power is OFF. Thus, it needs to add the thermal relay on each motor when an AC motor drive is connected with several motors.
- Setting 0 or 1: when the electronic thermal relay protection is enabled in low speed operation, the AC motor drive will display “OL1” and free run to stop. It needs to press “RESET” to clear the warning message.
- Related parameter: Pr.06.07(Electronic Thermal Characteristic)

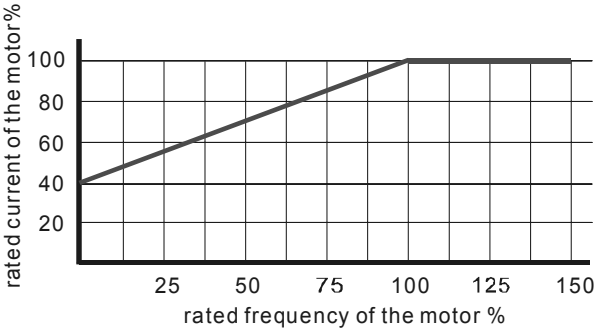


Standard motor
(self-cooled by fan)

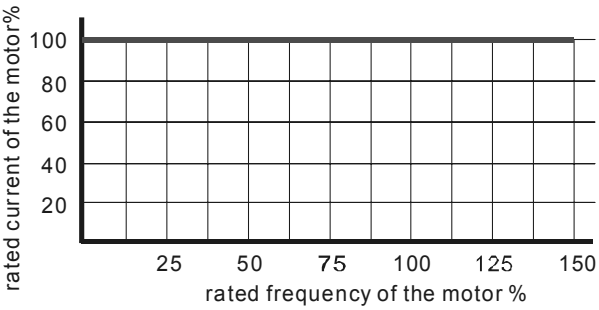


Special Motor
(forced external cooling)

**NOTE**

When the standard motor operates in low speed with rated current, the motor overload protection will occur easily. Thus, please use the special motor when operates in low speed with rated current.

Refer to Appendix C.3 How to choose a suitable motor for motor selection.

| **06.07** | Electronic Thermal Characteristic | Unit: second |
|---|---|---|
| Settings | 30 to 600 sec | Factory Setting: 60 |

- The parameter determines the time required for activating the $I^2t$ electronic thermal protection function by the output frequency/current of the AC motor drive and operation time to prevent motor from overheating.
- The electronic thermal overload relay acts by Pr.06.06 setting:
  1. Pr.06.06 is set to 0(Operate with a Standard Motor (self-cooled by fan)): when the output current is greater than (Pr.07.00 Motor Rated Current (Motor 0)X (the corresponding motor rated current % of motor rated frequency in standard motor figure in Pr.06.06) X150%), the AC motor drive will start to count time. When accumulated time exceeds Pr.06.07(Electronic Thermal Characteristic) setting, the electronic thermal overload relay protection (OL1) will be ON.
  2. Pr.06.06 is set to 1(Operate with a Special Motor (forced external cooling)): when the output current is greater than (Pr.07.00 Motor Rated Current (Motor 0)X (the corresponding motor rated current % of motor rated frequency in special motor figure in Pr.06.06) X150%), the AC motor drive will start to count time. When accumulated time exceeds Pr.06.07(Electronic Thermal Characteristic) setting, the electronic thermal overload relay protection (OL1) will be ON.
- The actual action time of electronic thermal characteristic will be adjusted by the output current of the AC motor drive (motor load rate %). For large current, it needs short time to activate the $I^2t$ electronic thermal protection function. For small current, it needs long time to activate the $I^2t$ electronic thermal protection function as shown in the following figure.
- Related parameters: Pr.06.06(Electronic Thermal Overload Relay Selection) and Pr,07.00(Motor Rated Current (Motor 0))

**NOTE**

- Please refer to Pr06-06 Electronic Thermal Relay Selection for <motor cooling curve with shaft-fixed fan diagram> and <motor cooling curve with independent fan diagram>.

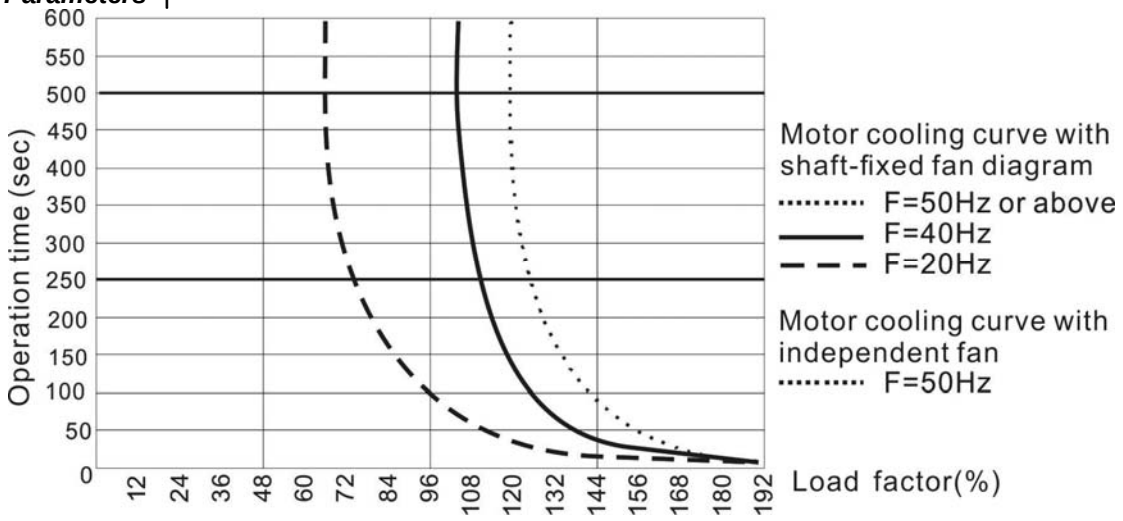


| | |
|---|---|
| **06.08** | Present Fault Record |
| **06.09** | Second Most Recent Fault Record |
| **06.10** | Third Most Recent Fault Record |
| **06.11** | Fourth Most Recent Fault Record |
| **06.12** | Fifth Most Recent Fault Record |

Factory Setting: 0

| | | |
|---|---|---|
| Readings | 0 | No fault |
| | 1 | Over-current (oc) |
| | 2 | Over-voltage (ov) |
| | 3 | IGBT Overheat (oH1) |
| | 4 | Reserved |
| | 5 | Overload(oL) |
| | 6 | Overload (oL1) |
| | 7 | Motor Overload (oL2) |
| | 8 | External Fault (EF) |
| | 9 | Current exceeds 2 times rated current during accel.(ocA) |
| | 10 | Current exceeds 2 times rated current during decel.(ocd) |
| | 11 | Current exceeds 2 times rated current during steady state operation (ocn) |
| | 12 | Ground fault (GFF) |
| | 13 | Reserved |
| | 14 | Phase-loss (PHL) |
| | 15 | Reserved |
| | 16 | Auto accel/decel failure (CFA) |
| | 17 | Software/password protection (codE) |
| | 18 | Power Board CPU WRITE Failure (cF1.0) |

| | |
|---|---|
| 19 | Power Board CPU READ Failure (cF2.0) |
| 20 | CC, OC Hardware protection failure (HPF1) |
| 21 | OV Hardware protection failure (HPF2) |
| 22 | GFF Hardware protection failure (HPF3) |
| 23 | OC Hardware protection failure (HPF4) |
| 24 | U-phase error (cF3.0) |
| 25 | V-phase error (cF3.1) |
| 26 | W-phase error (cF3.2) |
| 27 | DCBUS error (cF3.3) |
| 28 | IGBT Overheat (cF3.4) |
| 29 | Reserved |
| 30 | Control Board CPU WRITE failure (cF1.1) |
| 31 | Contrsol Board CPU READ failure (cF2.1) |
| 32 | ACI signal error (AErr) |
| 33 | Reserved |
| 34 | Motor PTC overheat protection (PtC1) |
| 35 | PG feedback signal error (PGEr) |
| 36-39 | Reserved |
| 40 | Communication time-out error of control board and power board (CP10) |
| 41 | dEb error |
| 42 | ACL (Abnormal Communication Loop) |
| 66 | U phase output phase loss (oPHL1) |
| 67 | V phase output phase loss (oPHL2) |
| 68 | W phase output phase loss (oPHL3) |

In Pr.06.08 to Pr.06.12 the five most recent faults that occurred, are stored. After removing the cause of the fault, use the reset command to reset the drive.

| **06.13** | Action for detected Output Phase Loss (OPHL) | |
|---|---|---|
| | | Factory Setting: 3 |
| Settings | 0 | Warn and keep operation |
| | 1 | Warn and ramp to stop |
| | 2 | Warn and coast to stop |
| | 3 | No warning |

| **06.14** | Deceleration Time of Output Phase Loss | Unit: second |
|---|---|---|
| Settings | 0.0 ~120.0 seconds | Factory Setting: 0.5 |

| **06.15** | Detected Current Bandwidth | Unit: % |
|---|---|---|
| | Settings 2 ~100.0 % | Factory Setting: 2 |

| **06.16** | Detected DC Brake Time of Output Phase Loss | Unit: second |
|---|---|---|
| | Settings 0.0 ~120.0 seconds | Factory Setting: 0.1 |

📖 Set Pr.06.13~06.16 can detect the driver output is disconnected or not.

📖 Open this function may cause misjudgment due to load or starting voltage is too small, here we can extend the detection time appropriately (Pr.06.14&Pr.06.16) or set Pr.06.15 value smaller.

# Group 7: Motor Parameters

| **07.00** | Motor Rated Current (Motor 0) | Unit: A |
|---|---|---|
| Settings | 30% FLA to 120% FLA | Factory Setting: FLA |

- Use the following formula to calculate the percentage value entered in this parameter:
  (Motor Current / AC Drive Current) x 100%
  with Motor Current=Motor rated current in A on type shield
  AC Drive Current=Rated current of AC drive in A (see Pr.00.01)
- Pr.07.00 must be greater than Pr.07.01.
  Example: Suppose that the rated current of 460V/2.0HP(1.5kW) is 4.2A with the factory setting 4.2A. The range that user can set is from 1.3A(4.2X30%) to 5.0A(4.2X120%). But when Pr.07.00 is set to less than 1.7A(4.2X40%), it needs to set Pr.07.01 to be less than 30% FLA first. In this way, Pr.07.00 is greater than Pr.07.01.
- Pr.07.00 and Pr.07.01 must be set if the drive is programmed to operate in Vector Control mode (Pr.00.10 = 1). They also must be set if the "Electronic Thermal Overload Relay" (Pr.06.06) or "Slip Compensation"(Pr.07.03 and Pr.07.06) functions are selected.
- The full-load current should be less than the rated current of the AC motor drive and should be greater than 1/2 rated current of the AC motor drive.
- Related parameters: Pr.00.01(Rated Current Display of the AC motor drive), Pr.06.06(Electronic Thermal Overload Relay Selection), Pr.06.07(Electronic Thermal Characteristic), Pr.07.01(Motor No-Load Current (Motor 0)), Pr.07.03(Slip Compensation (Used without PG) (Motor 0)) and Pr.07.06(Motor Rated Slip (Motor 0))

| **07.01** | Motor No-load Current (Motor 0) | Unit: A |
|---|---|---|
| Settings | 0% FLA to 99% FLA | Factory Setting: 0.4*FLA |

- This parameter is used to set the motor no-load current. The user must input motor no-load current by the motor nameplate. The factory setting be set to 40% X the rated current of the AC motor drive (refer to Pr.00.01 Rated Current Display of the AC motor drive).
  Example: Suppose that the rated current of 460V/2.0hp(1.5kW) is 4.2A with factory setting 4.2A. The motor no-load current is 1.7A(4.2X40%) and it should set Pr.07.01 to 1.7.
- This parameter must be set if the "Electronic Thermal Overload Relay" (Pr.06.06) or "Slip Compensation"(Pr.07.03 and Pr.07.06) functions are selected.
- If the motor no-load current can’t be read from the nameplate, operating the AC motor drive after unloading and read it from the digital keypad (optional, refer to Appendix B for details).
- The setting value must be less than Pr.07.00 (Motor Rated Current).
- Related parameters: Pr.00.01(Rated Current Display of the AC motor drive), Pr.07.00(Motor Rated Current (Motor 0)), Pr.07.03(Slip Compensation (Used without PG) (Motor 0)) and Pr.07.06(Motor Rated Slip (Motor 0))

| **07.02** | ⟋Torque Compensation (Motor 0) | |
|---|---|---|
| Settings | 0.0 to 10.0 | Factory Setting: 0.0 |

- For the induction motor characteristic, parts of the drive output voltage will be absorbed by the impedance of stator windings when motor load is large. In this circumstance, the output current will be too large and output torque is insufficient due to the motor voltage at inductance end of motor is insufficient and insufficient air-gap magnetic field. Using this parameter, it will auto adjust output voltage by the load to get the best operation with the air-gap magnetic field is held.
- In V/f control mode, the voltage will decrease by the decreasing frequency. It will cause lower torque in low speed due to less AC impedance and constant DC resistor. Thus, this parameter can be set for the AC drive increase its voltage output to obtain a higher torque in low speed.
- Too high torque compensation can overheat the motor.

- This parameter is only used for V/f control mode.
- Related parameters: Pr.00.10(Control Method) and Pr.07.08(Torque Compensation Time Constant).

| **07.03** | ✓Slip Compensation (Used without PG) (Motor 0) | |
|---|---|---|
| Settings | 0.00 to 10.00 | Factory Setting: 0.00 |

- When the induction motor generates the electromagnetic torque, it needs the necessary slip. But the slip can be ignored when it needs only 2-3% slip in higher speed. When the drive operates, the slip and synchronous frequency are in reverse proportion. That is, the slip will be increased with the decreasing synchronous frequency. The slip affects the motor speed seriously in low speed because the motor may stop and can't run with load when the synchronous frequency is too low.
- While driving an asynchronous motor, increasing the load on the AC motor drive will cause an increase in slip and decrease in speed.
- This parameter may be used to compensate the slip by increasing the output frequency. When the output current of the AC motor drive is bigger than the motor no-load current (Pr.07.01), the AC drive will adjust its output frequency according to this parameter.
- When Pr.00.10 is set from V/f mode to vector mode, this parameter will be set to 1.00 automatically. When Pr.00.10 is set from vector mode to V/f mode, this parameter will be set to 0.00. Please using this function after load is added and acceleration with gradual increasing compensation. That is, add the output frequency with Pr.07.06(Motor Rated Slip (Motor 0)) X Pr.07.03(Slip Compensation (Used without PG) (Motor 0)) on the output frequency

| **07.04** | Motor Parameters Auto Tuning | |
|---|---|---|
| | | Factory Setting: 0 |
| Settings | 0 | Disable |
| | 1 | Auto Tuning R1 (motor doesn't run) |
| | 2 | Auto Tuning R1 + No-load Test (with running motor) |

- Start Auto Tuning by pressing RUN key after this parameter is set to 1 or 2.
  When setting to 1, it will only auto detect R1 value and Pr.07.01 must be input manually. When set to 2, the AC motor drive should be unloaded and the values of Pr.07.01 and Pr.07.05 will be set automatically.
- The steps for AUTO-Tuning are:

1. Make sure that all the parameters are set to factory settings and the motor wiring is correct.
2. Make sure the motor has no-load before executing auto-tuning and the shaft is not connected to any belt or gear motor.
3. Fill in Pr.01.01, Pr.01.02, Pr.07.00, Pr.07.04 and Pr.07.06 with correct values.
4. After Pr.07.04 is set to 2, the AC motor drive will execute auto-tuning immediately after receiving a "RUN" command. (Note: The motor will run!). The total auto tune time will be 15 seconds + Pr.01.09 + Pr.01.10. Higher power drives need longer Accel/Decel time (factory setting is recommended). After executing Auto-tune, Pr.07.04 is set to 0.

5. After executing, please check if there are values filled in Pr.07.01 and Pr.07.05. If not, please press RUN key after setting Pr.07.04 again.
6. Then you can set Pr.00.10 to 1 and set other parameters according to your application requirement.

🕮 Related parameters: Pr.01.01(Maximum Voltage Frequency (Fbase) (Motor 0)), Pr.01.02(Maximum Output Voltage (Vmax) (Motor 0)), Pr.07.00(Motor Rated Current (Motor 0)), Pr.07.01(Motor No-Load Current (Motor 0)), Pr.07.05(Motor Line-to-line Resistance R1 (Motor 0)) and Pr.07.06(Motor Rated Slip (Motor 0))

**NOTE**

1. In vector control mode it is not recommended to have motors run in parallel.
2. It is not recommended to use vector control mode if motor rated power exceeds the rated power of the AC motor drive.

| **07.05** | Motor Line-to-line Resistance R1 (Motor 0) | Unit: mΩ |
|---|---|---|
| Settings | 0 to 65535 mΩ | Factory Setting: 0 |

🕮 The motor auto tune procedure will set this parameter. The user may also set this parameter without using Pr.07.04.

| **07.06** | Motor Rated Slip (Motor 0) | Unit: Hz |
|---|---|---|
| Settings | 0.00 to 20.00Hz | Factory Setting: 3.00 |

🕮 It can be used to set the motor rated slip. Users need to input the actual rated rpm shown on the nameplate of the motor.

🕮 Refer to the rated rpm and the number of poles on the nameplate of the motor and use the following equation to calculate the rated slip.
Rated Slip (Hz) = $F_{base}$ (Pr.01.01 base frequency) – (rated rpm x motor pole/120)
Example: Assume that the rated frequency of the motor is 60Hz with 4 poles and the rated rpm is 1650rpm. The rated slip calculated by the formula should be 60Hz-(1650X4/120)=5Hz.

🕮 This parameter has relation with Pr.07.03(Slip Compensation (Used without PG) (Motor 0)). To get the best slip compensation effect, it needs to input the correct setting. The incorrect setting may cause the invalid function and even damage the motor and drive.

🕮 Related parameter: Pr.07.03(Slip Compensation (Used without PG) (Motor 0))

| **07.07** | Slip Compensation Limit | Unit: % |
|---|---|---|
| Settings | 0 to 250% | Factory Setting: 200 |

🕮 This parameter sets the upper limit of the compensation frequency (the percentage of Pr.07.06).
Example: when Pr.07.06=5Hz and Pr.07.07=150%, the upper limit of the compensation frequency is 7.5Hz. Therefore, for a 50Hz motor, the max. output is 57.5Hz.

🕮 If the motor speed is lower than the target speed and the speed isn't changed after adjusting Pr.07.03 setting, it may reach the upper limit of the compensation frequency and need to increase Pr.07.07 setting.

🕮 Related parameters: Pr.07.03(Slip Compensation (Used without PG) (Motor 0)) and Pr.07.06(Motor Rated Slip (Motor 0))

| **07.08** | Torque Compensation Time Constant | Unit: second |
|---|---|---|
| Settings | 0.01 ~10.00 sec | Factory Setting: 0.30 |

📖 It is usually applied in those heavy load applications which the motor current is changed frequently. The current is changed for the current compensation to increase the output torque. Because the frequent current change will cause the machine vibration, it can increase Pr.07.08 setting to solve this problem at this moment.

| **07.09** | Slip Compensation Time Constant | Unit: second |
|---|---|---|
| Settings | 0.05 ~10.00 sec | Factory Setting: 0.20 |

📖 It is usually applied in those heavy load applications which the motor speed is changed frequently. The speed is changed for the speed compensation to reach the synchronous speed. Because the frequent speed change will cause the machine vibration, it can increase Pr.07.09 setting to solve this problem at this moment..

📖 Too long time constants (set Pr.07.08 and Pr.07.09 to 10) give slow response; too short values can give unstable operation. Please set by your applications.

| **07.10** | Accumulative Motor Operation Time (Min.) | |
|---|---|---|
| Settings | 0 | Factory Display: ## |
| Displays | 0~1439 | |

| **07.11** | Accumulative Motor Operation Time (Day) | |
|---|---|---|
| Settings | 0 | Factory Display: ## |
| Displays | 0 ~65535 | |

📖 Pr.07.10 and Pr.07.11 are used to record the motor operation time. They can be cleared by setting to 0 and time is less than 1 minute is not recorded.

📖 When setting Pr.07.11 to 0, it will reset the accumulative motor operation time and the record will be reset to 0.

| **07.12** | Motor PTC Overheat Protection | |
|---|---|---|
| | | Factory Setting: 0 |
| Settings | 0 | Disable |
| | 1 | Enable |

| **07.14** | Motor PTC Overheat Protection Level | Unit: V |
|---|---|---|
| Settings | 0.1~10.0V | Factory Setting: 2.4 |

📖 When the motor is running at low frequency for a long time, the cooling function of the motor fan will be lower. To prevent overheating, it needs to have a Positive Temperature Coefficient thermoistor on the motor and connect its output signal to the drive's corresponding control terminals.

📖 When the source of first/second frequency command is set to AVI (02.00=1/02.09=1), it will disable the function of motor PTC overheat protection (i.e. Pr.07.12 cannot be set to 1). Only one of the source of first master frequency command and second master frequency command can be enable at one time.

- If temperature exceeds the setting level, motor will be coast to stop and PtC1 is displayed. When the temperature decreases below the level of (Pr.07.15-Pr.07.16) and PtC1 stops blinking, you can press RESET key to clear the fault.
- Pr.07.14 (overheat protection level) must exceed Pr.07.15 (overheat warning level).
- The PTC uses the AVI-input and is connected via resistor-divider as shown below.
  The voltage between +10V to ACM: lies within 10.4V~11.2V.
  The impedance for AVI is around 47kΩ.
  Recommended value for resistor-divider R1 is 1~10kΩ.
  Please contact your motor dealer for the curve of temperature and resistance value for PTC.

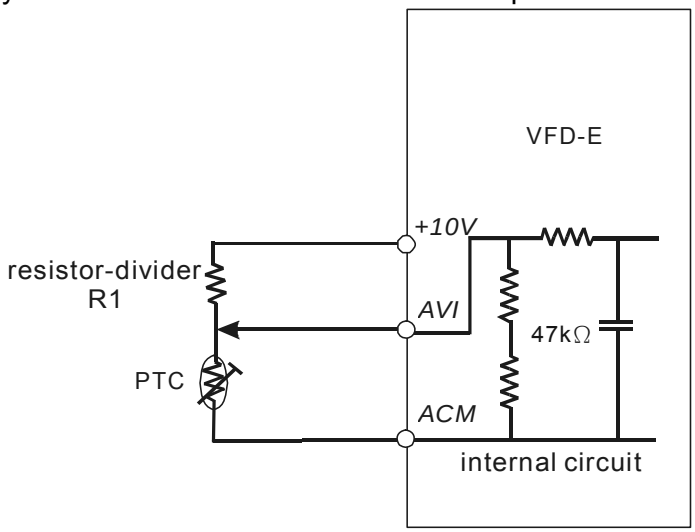


- Refer to following calculation for protection level and warning level.
  Protection level
  Pr.07.14= $V_{+10}$ * ($R_{PTC1}$//47K) / [R1+( $R_{PTC1}$//47K)]
  Warning level
  Pr.07.16= $V_{+10}$ * ($R_{PTC2}$//47K) / [R1+( $R_{PTC2}$//47K)]
  Definition:
  V+10: voltage between +10V-ACM, Range 10.4~11.2VDC
  RPTC1: motor PTC overheat protection level. Corresponding voltage level set in Pr.07.14,
  RPTC2: motor PTC overheat warning level. Corresponding voltage level set in Pr.07.15,
  47kΩ: is AVI input impedance, R1: resistor-divider (recommended value: 1~20kΩ)
- Take the standard PTC thermistor as example: if protection level is 1330Ω, the voltage between +10V-ACM is 10.5V and resistor-divider R1 is 4.4kΩ. Refer to following calculation for Pr.07.14 setting.
  1330//47000=(1330*47000)/(1330+47000)=1293.4
  10.5*1293.4/(4400+1293.4)=2.38(V) ≒2.4(V)
  Therefore, Pr.07.14 should be set to 2.4.

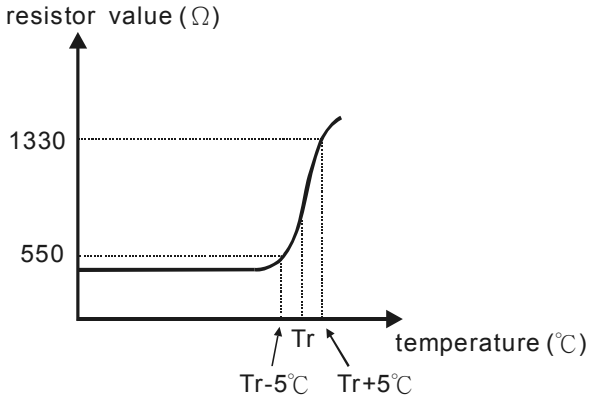

Related parameters: Pr.02.00(Source of First Master Frequency Command), Pr.02.09(Source of Second Frequency Command), Pr.07.13(Input Debouncing Time of the PTC Protection), Pr.07.15(Motor PTC Overheat Warning Level), Pr.07.16(Motor PTC Overheat Reset Delta Level) and Pr.07.17(Treatment of the Motor PTC Overheat)

| **07.15** | Motor PTC Overheat Warning Level | Unit: V |
|---|---|---|
| | Settings 0.1~10.0V | Factory Setting: 1.2 |
| **07.16** | Motor PTC Overheat Reset Delta Level | Unit: V |
| | Settings 0.1~5.0V | Factory Setting: 0.6 |
| **07.17** | Treatment of the motor PTC Overheat | |
| | | Factory Setting: 0 |
| | Settings 0 Warn and RAMP to stop | |
| | 1 Warn and COAST to stop | |
| | 2 Warn and keep running | |

If temperature exceeds the motor PTC overheat warning level (Pr.07.15), the drive will act according to Pr.07.17 and display PtC2 on the keypad.

Setting Pr.07.17 to 0: When the motor PTC overheat protection is activated, it will display PtC2 on the digital keypad and the motor will stop to 0Hz by Pr.01.10/Pr.01.12 setting.

Setting Pr.07.17 to 1: When the motor PTC overheat protection is activated, it will display PtC2 on the digital keypad and the motor will free run to stop.

Setting Pr.07.17 to 2: When the motor PTC overheat protection is activated, it will display PtC2 on the digital keypad and the motor will keep running.

If the temperature decreases below the result (Pr.07.15 minus Pr.07.16), the warning display PtC2 will disappear.

**NOTE**

The digital keypad is optional. Please refer to Appendix B for details. When using without this optional keypad, the FAULT LED will be ON once there is error messages or warning messages from the external terminals.

| **07.13** | Input Debouncing Time of the PTC Protection | Unit: 2ms |
|---|---|---|
| | Settings 0~9999 (is 0-19998ms) | Factory Setting: 100 |

This parameter is to delay the signals on PTC analog input terminals. 1 unit is 2 msec, 2 units are 4 msec, etc.

| **07.18** | Motor Rated Current (Motor 1) | Unit: A |
|---|---|---|
| | Settings 30% FLA to 120% FLA | Factory Setting: FLA |
| **07.19** | Motor No-load Current (Motor 1) | Unit: A |

| | | |
|---|---|---|
| Settings | 0% FLA to 90% FLA | Factory Setting: 0.4*FLA |

| | | |
|---|---|---|
| **07.20** | ⁄ Torque Compensation (Motor 1) | |
| Settings | 0.0 to 10.0 | Factory Setting: 0.0 |
| **07.21** | ⁄ Slip Compensation (Used without PG) (Motor 1) | |
| Settings | 0.00 to 10.00 | Factory Setting: 0.00 |
| **07.22** | Motor Line-to-line Resistance R1 (Motor 1) | Unit: mΩ |
| Settings | 0 to 65535 mΩ | Factory Setting: 0 |
| **07.23** | Motor Rated Slip (Motor 1) | Unit: Hz |
| Settings | 0.00 to 20.00Hz | Factory Setting: 3.00 |
| **07.24** | Motor Pole Number (Motor 1) | |
| Settings | 2 to 10 | Factory Setting: 4 |
| **07.25** | Motor Rated Current (Motor 2) | Unit: A |
| Settings | 30% FLA to 120% FLA | Factory Setting: FLA |
| **07.26** | Motor No-load Current (Motor 2) | Unit: A |
| Settings | 0% FLA to 90% FLA | Factory Setting: 0.4*FLA |
| **07.27** | ⁄ Torque Compensation (Motor 2) | |
| Settings | 0.0 to 10.0 | Factory Setting: 0.0 |
| **07.28** | ⁄ Slip Compensation (Used without PG) (Motor 2) | |
| Settings | 0.00 to 10.00 | Factory Setting: 0.00 |
| **07.29** | Motor Line-to-line Resistance R1 (Motor 2) | Unit: mΩ |
| Settings | 0 to 65535 mΩ | Factory Setting: 0 |
| **07.30** | Motor Rated Slip (Motor 2) | Unit: Hz |
| Settings | 0.00 to 20.00Hz | Factory Setting: 3.00 |
| **07.31** | Motor Pole Number (Motor 2) | |
| Settings | 2 to 10 | Factory Setting: 4 |
| **07.32** | Motor Rated Current (Motor 3) | Unit: A |
| Settings | 30% FLA to 120% FLA | Factory Setting: FLA |
| **07.33** | Motor No-load Current (Motor 3) | Unit: A |
| Settings | 0% FLA to 90% FLA | Factory Setting: 0.4*FLA |
| **07.34** | ⁄ Torque Compensation (Motor 3) | |
| Settings | 0.0 to 10.0 | Factory Setting: 0.0 |
| **07.35** | ⁄ Slip Compensation (Used without PG) (Motor 3) | |
| Settings | 0.00 to 10.00 | Factory Setting: 0.00 |

| | | |
|---|---|---|
| **07.36** | Motor Line-to-line Resistance R1 (Motor 3) | Unit: mΩ |
| | Settings 0 to 65535 mΩ | Factory Setting: 0 |
| **07.37** | Motor Rated Slip (Motor 3) | Unit: Hz |
| | Settings 0.00 to 20.00Hz | Factory Setting: 3.00 |
| **07.38** | Motor Pole Number (Motor 3) | |
| | Settings 2 to 10 | Factory Setting: 4 |

📖 The motor 0 to motor 3 can be selected by setting the multi-function input terminals MI3~MI6 (Pr.04.05 to Pr.04.08) to 27 and 28.

# Group 8: Special Parameters

| **08.00** | DC Brake Current Level | Unit: % |
|---|---|---|
| | Settings 0 to 100% | Factory Setting: 0 |

This parameter sets the level of DC Brake Current output to the motor during start-up and stopping. When setting DC Brake Current, the Rated Current (Pr.00.01) is regarded as 100%. It is recommended to start with a low DC Brake Current Level and then increase until proper holding torque has been achieved.

Related parameters: Pr.08.01(DC Brake Time during Start-up) and Pr.08.02(DC Brake Time during Stopping)

| **08.01** | DC Brake Time during Start-up | Unit: second |
|---|---|---|
| | Settings 0.0 to 60.0 sec | Factory Setting: 0.0 |

The motor may keep running due to external factor or itself inertia. The over current may damage the motor or activate the drive's protection when running the drive suddenly. This parameter can output a DC current with a torque to force the motor to stop for a stable start.

This parameter determines the duration of the DC Brake current after a RUN command. When the time has elapsed, the AC motor drive will start accelerating from the Minimum Frequency (Pr.01.05). The DC brake is invalid when Pr.08.01 is set to 0.

| **08.02** | DC Brake Time during Stopping | Unit: second |
|---|---|---|
| | Settings 0.0 to 60.0 sec | Factory Setting: 0.0 |

The motor may keep running due to external factor or itself inertia and can't stop by requirement. This parameter can output a DC current with a torque to force the motor to stop after the drive stops outputting to ensure the motor is stop.

This parameter determines the duration of the DC Brake current during stopping. If stopping with DC Brake is desired, Pr.02.02 Stop Method must be set to 0 or 2 for Ramp to Stop. The DC brake is invalid when Pr.08.02 is set to 0.0.

Related parameters: Pr.02.02(Stop Method) and Pr.08.03(Start-Point for DC Brake)

| **08.03** | Start-Point for DC Brake | Unit: Hz |
|---|---|---|
| | Settings 0.00 to 600.00Hz<br>(Japanese version: 0.00 to 599.00 Hz ) | Factory Setting: 0.00 |

This parameter determines the frequency when DC Brake will begin during deceleration.

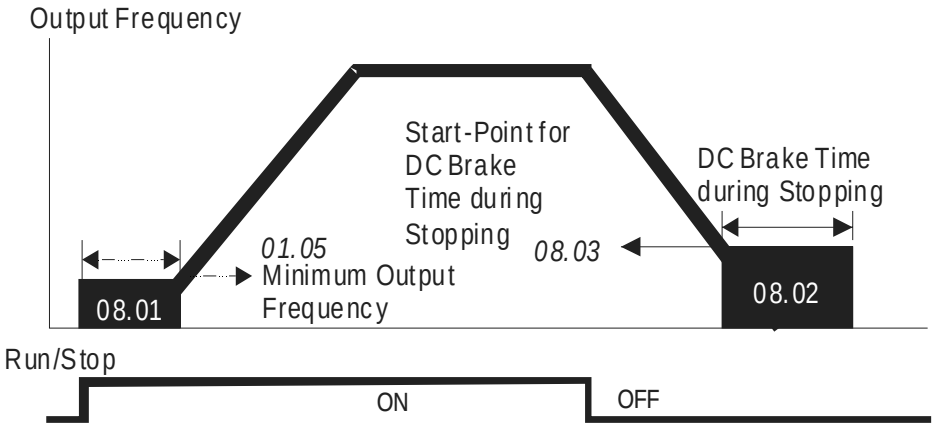


DC Brake Time

- DC Brake during Start-up is used for loads that may move before the AC drive starts, such as fans and pumps. Under such circumstances, DC Brake can be used to hold the load in position before setting it in motion.
- DC Brake during stopping is used to shorten the stopping time and also to hold a stopped load in position, such as cranes and cutting machines. For high inertia loads, a brake resistor for dynamic brake may also be needed for fast decelerations. Refer to appendix B for the information of brake resistors.

| **08.04** | Momentary Power Loss Operation Selection |
|---|---|

Factory Setting: 0

| | | |
|---|---|---|
| Settings | 0 | Operation stops (coast to stop) after momentary power loss. |
| | 1 | Operation continues after momentary power loss, speed search starts with the Last Frequency. |
| | 2 | Operation continues after momentary power loss, speed search starts with the minimum frequency. |

- This parameter determines the operation mode when the AC motor drive restarts from a momentary power loss.
- The power connected to the AC motor drive may be off temporarily with unknown factors. This parameter can restart the drive after momentary power loss.
- Setting 1: the drive will operate by the last frequency before momentary power loss. It will accelerate to the master frequency after the drive output frequency and the motor rotor's speed are synchronous. It is recommended to use this setting for those motor loads which have a large inertia and small resistance to save time by restarting without waiting the flywheel stops completely, such as machinery equipment with a large-inertia flywheel.
- Setting 2: the drive will operate by the min. frequency. It will accelerate to the master frequency after the drive output frequency and motor rotor speed are synchronous. It is recommended to use this setting for those motor loads which have a small inertia and large resistance.
- When using with PG card, the speed search will start with the actual motor speed detected by the drive and accelerate to the setting frequency (setting 1 and 2 are invalid at this moment).
- Related parameters: Pr.08.05(Maximum Allowable Power Loss Time), Pr.08.07(Baseblock Time for Speed Search (BB)) and Pr.08.08(Current Limit for Speed Search)

| **08.05** | Maximum Allowable Power Loss Time | Unit: second |
|---|---|---|

Settings 0.1 to 20.0 sec Factory Setting: 2.0

- If the duration of a power loss is less than this parameter setting, the AC motor drive will act by Pr.08.04 setting. If it exceeds the Maximum Allowable Power Loss Time, the AC motor drive output is then turned off (coast stop).
- The selected operation after power loss in Pr.08.04 is only executed when the maximum allowable power loss time is ≤20 seconds and the AC motor drive displays "Lu".
  But if the AC motor drive is powered off due to overload, even if the maximum allowable power loss time is ≤20 seconds, the operation mode as set in Pr.08.04 is not executed. In that case it starts up normally.

| 08.06 | Base Block Speed Search |
|---|---|

Factory Setting: 1

| | | |
|---|---|---|
| Settings | 0 | Disable |
| | 1 | Speed search starts with last frequency |
| | 2 | Speed search starts with minimum output frequency (Pr.01.05) |

- This parameter determines the AC motor drive restart method after External Base Block is enabled(one of Pr.04.05~04.08 is set to 9).
- The speed search actions between Pr.08.04 and Pr.08.06 are the same.
- The priority of Pr.08.06 is higher than Pr.08.04. That is, Pr.08.04 will be invalid after Pr.08.06 is set and the speed search will act by Pr.08.06.
- Related parameters: Pr.08.07(Baseblock Time for Speed Search (BB)), Pr.04.05(Multi-function Input Terminal (MI3)), Pr.04.06(Multi-function Input Terminal (MI4)), Pr.04.07(Multi-function Input Terminal (MI5)) and Pr.04.08(Multi-function Input Terminal (MI6))

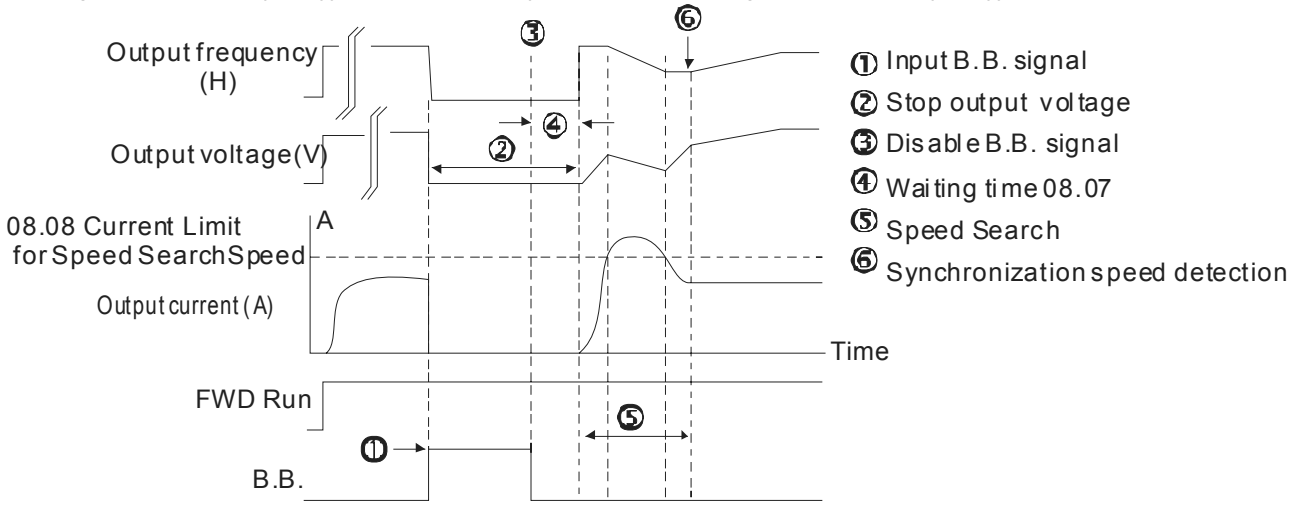


Fig 1:B.B. Speed Search with Last Frequency Downward Timing Chart

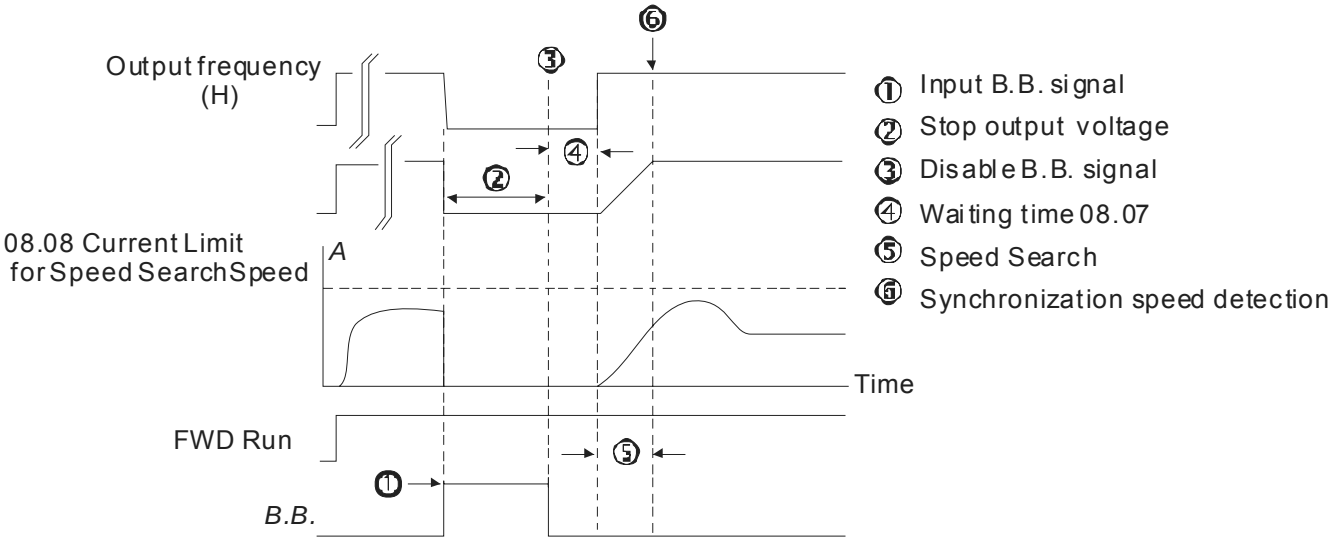


Fig 2: B.B. Speed Search with Min. Output Frequency Upward Timing Chart

| 08.07 | Baseblock Time for Speed Search (BB) | Unit: second |
|---|---|---|
| | Settings 0.1 to 5.0 sec | Factory Setting: 0.5 |

- When momentary power loss is detected, the AC motor drive will block its output and then wait for a specified period of time (determined by Pr.08.07, called Base-Block Time) before resuming operation. This parameter should be set at a value to ensure that any residual regeneration voltage from the motor on the output has disappeared before the drive is activated again.
- This parameter also determines the waiting time before resuming operation after External Baseblock and Auto Restart after Fault (Pr.08.15).
- When using a PG card with PG (encoder), speed search will begin at the actual PG (encoder) feedback speed.

| 08.08 | Current Limit for Speed Search | Unit: % |
|---|---|---|
| | Settings 30 to 200% | Factory Setting: 150 |

- It limits the drive output current during speed search.
- When executing speed search, the V/f curve will be by the setting in the group 01.
- The level of speed search will affect the speed synchronization time. The larger setting is set and the faster it will reach the speed synchronization. But too large setting may cause overload.
- When Pr.08.04 is set to 1: When the speed searches downward, the output frequency starts with the master frequency. The output voltage and output current will be increased from 0. When the output current reaches Pr.08.08 setting, the output frequency continuous searches downward. When the output frequency, output voltage and V/f setting frequency are the same, it will be regarded as the synchronization reached and accelerate to the master frequency by V/f curve.
- When Pr.08.04 is set to 2: When the speed searches upward, it will accelerate by V/f curve.

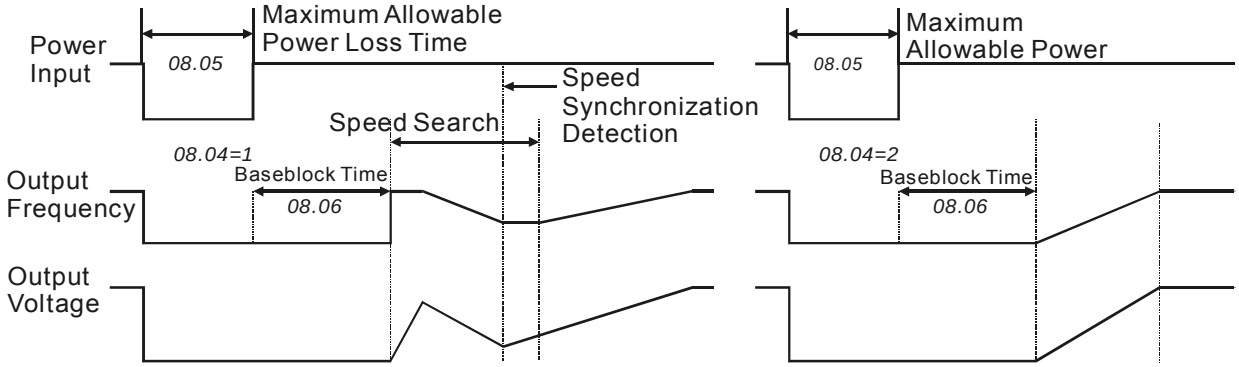


**Momentary Power Loss Operation**

| 08.09 | Skip Frequency 1 Upper Limit | Unit: Hz |
|---|---|---|
| 08.10 | Skip Frequency 1 Lower Limit | Unit: Hz |
| 08.11 | Skip Frequency 2 Upper Limit | Unit: Hz |
| 08.12 | Skip Frequency 2 Lower Limit | Unit: Hz |
| 08.13 | Skip Frequency 3 Upper Limit | Unit: Hz |
| 08.14 | Skip Frequency 3 Lower Limit | Unit: Hz |
| | Settings 0.00 to 600.00Hz | Factory Setting: 0.00 |

(Japanese version: 0.00 to 599.00 Hz )

- These parameters are used to set the frequencies that are inhibited to operate. This function can be used to prevent the resonance generated from the original frequency of the machines. It keeps the drive from running at the resonance frequency of machinery or load system or other inhibition frequency. There are three frequency areas can be set.
- These parameters set the Skip Frequencies. It will cause the AC motor drive never to remain within these frequency ranges with continuous frequency output. These six parameters should be set as follows Pr.08.09 ≥ Pr.08.10 ≥ Pr.08.11 ≥ Pr.08.12 ≥ Pr.08.13 ≥ Pr.08.14. When it is set to 0.0, the skip frequency is invalid.
- The frequency command (F) can be set within the range of skip frequency. At this moment, the output frequency (H) will be less than the lower limit of skip frequency.
- When the drive accelerates/decelerates, the output frequency will pass the range of skip frequency.

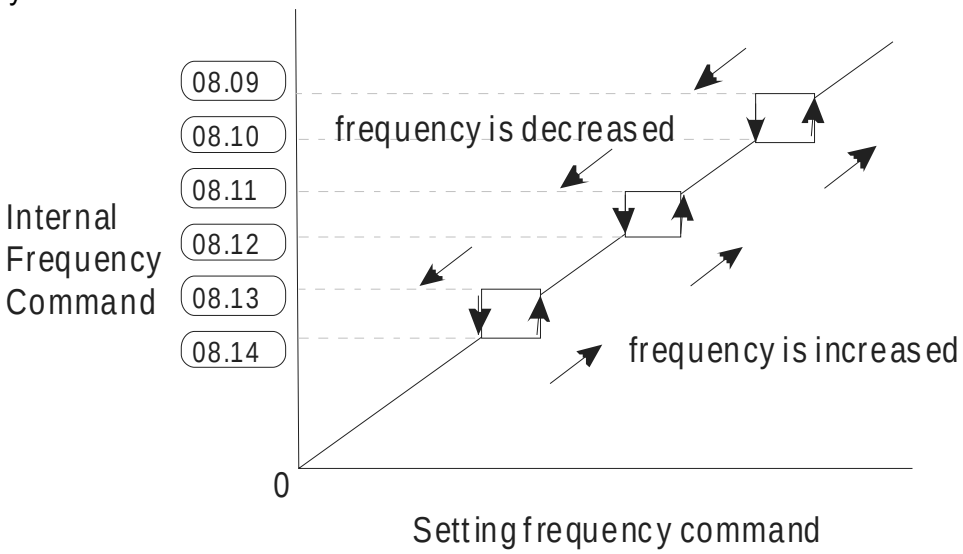


| 08.15 | Auto Restart After Fault | |
|---|---|---|
| Settings | 0 to 10 | Factory Setting: 0 |
| | 0 Disable | |

- Only after an over-current OC or over-voltage OV fault occurs, the AC motor drive can be reset/restarted automatically up to 10 times.
- Setting this parameter to 0 will disable automatic reset/restart operation after any fault has occurred.
  When enabled, the AC motor drive will restart with speed search, which starts at the frequency before the fault. To set the waiting time before restart after a fault, please set Pr. 08.07 Base Block Time for Speed Search.
- When the fault times exceeds Pr.08.15 setting, the drive will refuse to restart and the user needs to press “RESET” for continuous operation.
- Related parameter: Pr.08.16 (Auto Reset Time at Restart after Fault)

| 08.16 | Auto Reset Time at Restart after Fault | Unit: second |
|---|---|---|
| Settings | 0.1 to 6000 sec | Factory Setting: 60.0 |

- This parameter is used to set the auto reset time at restart after fault. After restarting for fault, if there is no fault for over Pr.08.16 setting from the restart for the previous fault, the auto reset times for restart after fault will be reset to Pr.08.15 setting..
- This parameter should be used in conjunction with Pr.08.15.
  For example: If Pr.08.15 is set to 10 and Pr.08.16 is set to 600s (10 min), and if there is no

fault for over 600 seconds from the restart for the previous fault, the auto reset times for restart after fault will be reset to 10.

Related parameter: Pr.08.15(Auto Restart After Fault)

## 08.17 Automatic Energy-saving

Factory Setting: 0

| | | |
|---|---|---|
| Settings | 0 | Energy-saving operation disabled |
| | 1 | Energy-saving operation enabled |

When Pr.08.17 is set to 1, the acceleration and deceleration will operate with full voltage. During constant speed operation, it will auto calculate the best voltage value by the load power for the load. This function is not suitable for the ever-changing load or near full-load during operation.

The max. energy saving is in the stable load output. At this moment, the output voltage is almost 70% of the rated voltage.

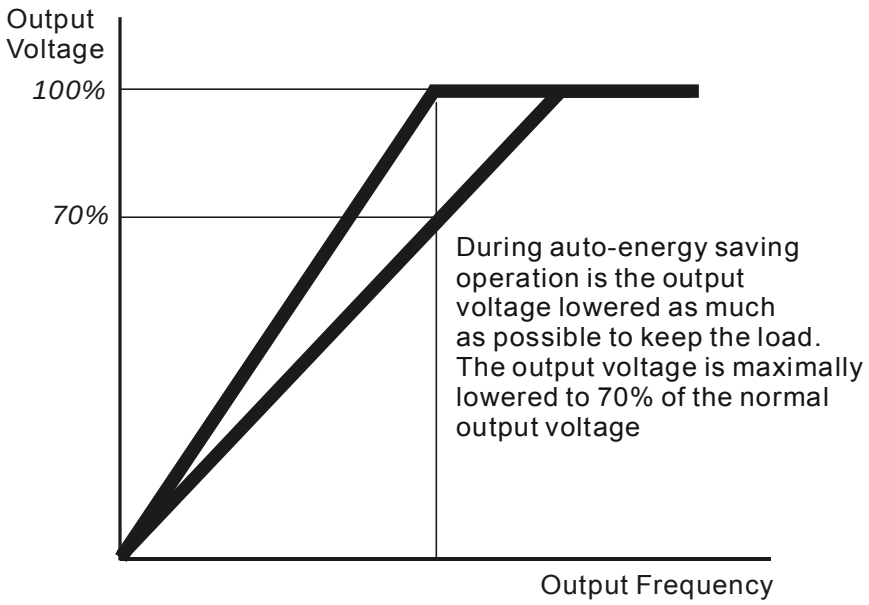


## 08.18 Automatic Voltage Regulation (AVR)

Factory Setting: 0

| | | |
|---|---|---|
| Settings | 0 | AVR function enabled |
| | 1 | AVR function disabled |
| | 2 | AVR function disabled for deceleration |
| | 3 | AVR function disabled for stop |

The rated voltage of the motor is usually 230V/200VAC 50Hz/60Hz and the input voltage of the AC motor drive may vary between 180V to 264 VAC 50Hz/60Hz. Therefore, when the AC motor drive is used without AVR function, the output voltage will be the same as the input voltage. When the motor runs at voltages exceeding the rated voltage with 12% - 20%, its lifetime will be shorter and it can be damaged due to higher temperature, failing insulation and unstable torque output.

AVR function automatically regulates the AC motor drive output voltage to the Maximum Output Voltage (Pr.01.02). For instance, if Pr.01.02 is set at 200 VAC and the input voltage is at 200V to 264VAC, then the Maximum Output Voltage will automatically be reduced to a maximum of 200VAC.

- Setting 0: when AVR function is enabled, the drive will calculate the output voltage by actual DC-bus voltage. The output voltage won't be changed by DC bus voltage.
- Setting 1: when AVR function is disabled, the drive will calculate the output voltage by DC-bus voltage. The output voltage will be changed by DC bus voltage. It may cause insufficient/over current.
- Setting 2: the drive will disable the AVR during deceleration, such as operated from high speed to low speed.
- Setting 3: the drive will disable the AVR function at stop to accelerate the brake.
- When the motor ramps to stop, the deceleration time is longer. When setting this parameter to 2 with auto acceleration/deceleration, the deceleration will be quicker.
- Related parameter: Pr.01.16(Auto acceleration / deceleration (refer to Accel/Decel time setting))

| **08.19** | Software Brake Level<br>(the Action Level of the Brake resistor) | Unit: V |
|---|---|---|
| Settings | 115/230V series: 370.0 to 430.0V | Factory Setting: 380.0 |
| | 460V series: 740.0 to 860.0V | Factory Setting: 760.0 |

- This parameter sets the DC-bus voltage at which the brake chopper is activated. Users can choose the suitable brake resistor to have the best deceleration. Refer to appendix B for the information of the brake resistor.
- This parameter will be invalid for Frame A models (VFD002E11A/21A/23A, VFD004E11A/21A/23A/43A, VFD007E21A/23A/43A and VFD022E23A/43A) without brake chopper for which BUE brake unit must be used.

| **08.20** | ✓Compensation Coefficient for Motor Instability | |
|---|---|---|
| Settings | 0.0~5.0 | Factory Setting: 0.0 |

- In V/f control mode, the drift current may cause slight motor vibration in the slip compensation or torque compensation. It can be ignored if this slight vibration doesn't affect the application.
- The drift current will occur in a specific zone of the motor and it will cause serious motor vibration. It is recommended to use this parameter(the recommended value is 2.0) to improve this situation greatly.
- The drift current zone of the high-power motors is usually in the low frequency area.
- It is recommended to set to more than 2.0.

| **08.21** | OOB Sampling Time | Unit: second |
|---|---|---|
| Settings | 0.1 to 120.0 sec | Factory Setting: 1.0 |
| **08.22** | Number of OOB Sampling Times | |
| Settings | 0.00 to 32 | Factory Setting: 20 |
| **08.23** | OOB Average Sampling Angle | |
| Settings | Read-only | Factory Setting: #.# |

- The OOB (Out Of Balance Detection) function can be used with PLC for washing machine. When multi-function input terminal is enabled (MI=26), it will get Δθ value from the settings of Pr.08.21 and Pr.08.22. PLC or the host controller will decide the motor speed by this t Δθ value (Pr.08.23). When Δθ value is large, it means unbalanced load. At this moment, it needs to lower the frequency command by PLC or the host controller. On the other hand, it can be high-speed operation.

Related parameters: Pr.04.05(Multi-function Input Terminal (MI3)), 04.06(Multi-function Input Terminal (MI4)), Pr.04.07(Multi-function Input Terminal (MI5)) and Pr.04.08(Multi-function Input Terminal (MI6))

| **08.24** | DEB Function | |
|---|---|---|
| | | Factory Setting: 0 |
| Settings | 0 | Disable |
| | 1 | Enable |

| **08.25** | DEB Return Time | Unit: second |
|---|---|---|
| Settings | 0~25 sec | Factory Setting: 0 |

The DEB (Deceleration Energy Backup) function is the AC motor drive decelerates to stop after momentary power loss. When the momentary power loss occurs, this function can be used for the motor to decelerate to 0 speed with deceleration stop method. When the power is on again, motor will run again after DEB return time. (for high-speed axis application)

Related parameter: Pr.08.04(Momentary Power Loss Operation Selection)

Status 1: Insufficient power supply due to momentary power-loss/unstable power (due to low voltage)/sudden heavy-load

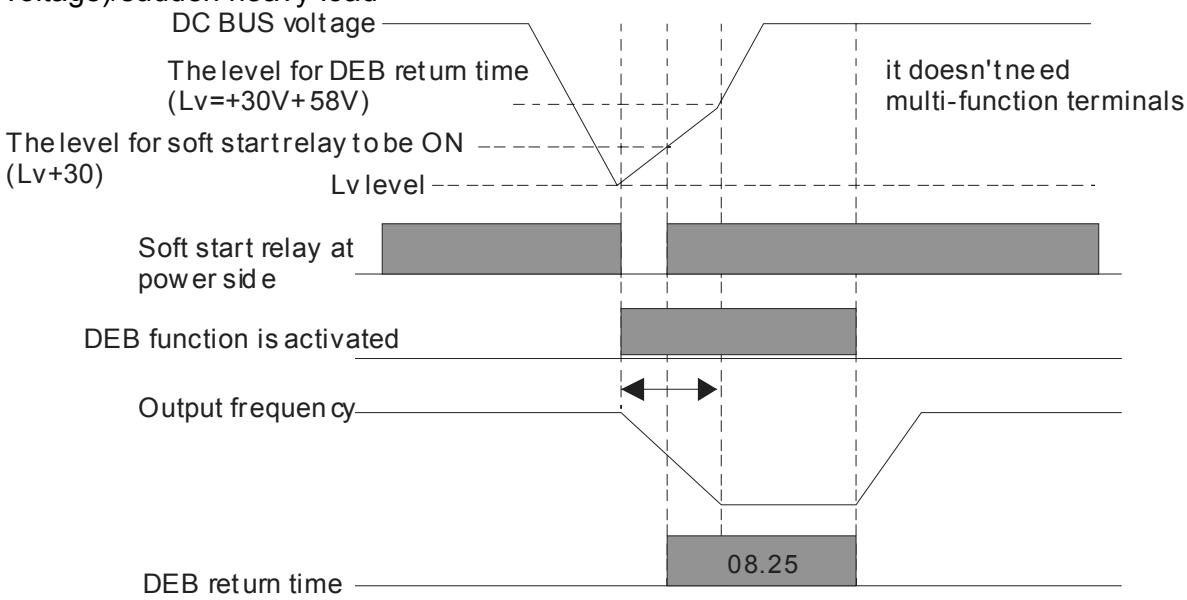


**NOTE**

When Pr.08.24 is set to 0, the AC motor drive will be stopped and won't re-start at the power-on again.

Note1: 230Vac models LV+30V => Soft Start relay on level
LV+30V+14V => DEB return time calculate level
460Vac models LV+60V => Soft Start relay on level
LV+60V+28V => DEB return time calculate level

Status 2: unexpected power off, such as momentary power loss

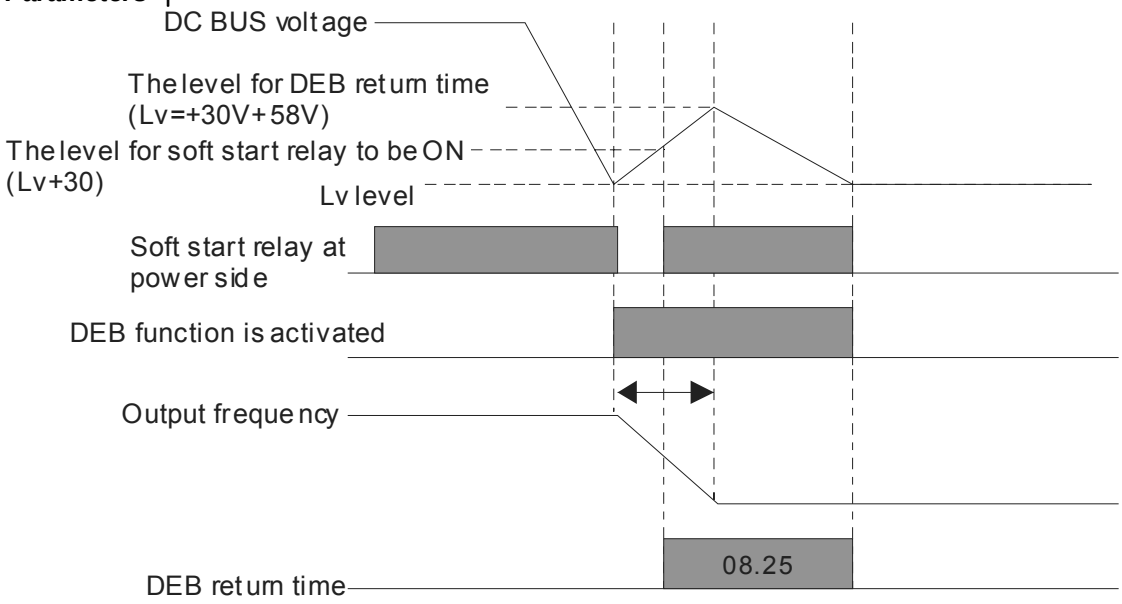


| 08.26 | Speed Search during Start-up |
|---|---|

Factory Setting: 0

Settings 0 Disable

1 Enable

This parameter is used for starting and stopping a motor with high inertia. A motor with high inertia will take a long time to stop completely. By setting this parameter, the user does not need to wait for the motor to come to a complete stop before restarting the AC motor drive. If a PG card and encoder is used on the drive and motor, then the speed search will start from the speed that is detected by the encoder and accelerate quickly to the setting frequency.

When using this parameter with PG feedback control, this function will be enabled as Pr.13.00 and Pr.13.01 are set. It has no relation with Pr.00.10. Pr.08-04 and Pr.08-06 will be disabled when using this parameter with PG feedback control.

Please make sure Pr.13.00 to Pr.13.02 are set correctly. An incorrect setting may cause the motor to exceed its speed limit and permanent damage to the motor and machine can occur.

| 08.27 | ✓Speed Search Frequency during Start-up |
|---|---|

Factory Setting: 0

Settings 0 Setting Frequency

1 Maximum Operation Frequency (Pr.01.00)

This parameter determines the start value of the speed search frequency.

| 08.28 | Output Voltage Limit | Unit: % |
|---|---|---|

Settings 80~150% Factory Setting: 100

This parameter sets the limit for actual output voltage. For constant torque applications, sets this parameter to high value can lower the load current.

| **08.29** | ✓ Special Bit Control Parameter |
|---|---|

Factory Setting: 0

Settings Bit0=1,cancel internal frequency command filter

In order to let frequency command gently, drive can use frequency command filter but the response will be slow. If you want the fast response you can set Bit0=1(cancel internal frequency command filter).

# Group 9: Communication Parameters

There is a built-in RS-485 serial interface, marked RJ-45 near to the control terminals. The pins are defined below:

*RS-485 (NOT for VFD*E*C models)*

8←1 Serial interface

| | | |
|---|---|---|
| 1: Reserved | 2: EV | 3: GND |
| 4: SG- | 5: SG+ | 6: Reserved |
| 7: Reserved | 8: Reserved | |

The pins definition for VFD*E*C models, please refer to chapter E.1.2.

Each VFD-E AC motor drive has a pre-assigned communication address specified by Pr.09.00. The RS485 master then controls each AC motor drive according to its communication address.

**09.00** ✓Communication Address

Settings 1 to 254 Factory Setting: 1

If the AC motor drive is controlled by RS-485 serial communication, the communication address for this drive must be set via this parameter. And the communication address for each AC motor drive must be different and unique.

**09.01** ✓Transmission Speed

Factory Setting: 1

| | | |
|---|---|---|
| Settings | 0 | Baud rate 4800 bps (bits / second) |
| | 1 | Baud rate 9600 bps |
| | 2 | Baud rate 19200 bps |
| | 3 | Baud rate 38400 bps |

This parameter is used to set the transmission speed between the RS485 master (PLC, PC, etc.) and AC motor drive.

**09.02** ✓Transmission Fault Treatment

Factory Setting: 3

| | | |
|---|---|---|
| Settings | 0 | Warn and keep operating |
| | 1 | Warn and RAMP to stop |
| | 2 | Warn and COAST to stop |
| | 3 | No warning and keep operating |

This parameter is set to how to react if transmission errors occur.

Setting 0: when transmission errors occur, it will display warning message “cEXX” on the digital keypad and the motor will keep running. The warning message can be cleared after the communication is normal.

Setting 1: when transmission errors occur, it will display warning message “cEXX” on the digital keypad and the motor will stop by the deceleration time (Pr.01.10/01.12). It needs to press “RESET” to clear the warning message.

Setting 2: When transmission errors occur, it will display warning message “cEXX” on the digital keypad and the motor will free run to stop immediately. It needs to press “RESET” to clear the warning message.

Setting 3: When transmission errors occur, it won’t display any warning message on the digital keypad and the motor will still keep running.

🕮 See list of error messages below (see section 3.6 in Pr.09.04)

**NOTE**

The digital keypad is optional. Please refer to Appendix B for details. When using without this optional keypad, the FAULT LED will be ON once there is error messages or warning messages from the external terminals.

| **09.03** | ✓Time-out Detection | Unit: second |
|---|---|---|

Settings 0.0 to 120.0 sec Factory Setting: 0.0

0.0 Disable

🕮 If Pr.09.03 is not equal to 0.0, Pr.09.02=0~2, and there is no communication on the bus during the Time Out detection period (set by Pr.09.03), “cE10” will be shown on the keypad.

| **09.04** | ✓Communication Protocol |
|---|---|

Factory Setting: 0

Settings

| | |
|---|---|
| 0 | Modbus ASCII mode, protocol <7,N,2> |
| 1 | Modbus ASCII mode, protocol <7,E,1> |
| 2 | Modbus ASCII mode, protocol <7,O,1> |
| 3 | Modbus RTU mode, protocol <8,N,2> |
| 4 | Modbus RTU mode, protocol <8,E,1> |
| 5 | Modbus RTU mode, protocol <8,O,1> |
| 6 | Modbus RTU mode, protocol <8,N,1> |
| 7 | Modbus RTU mode, protocol <8,E,2> |
| 8 | Modbus RTU mode, protocol <8,O,2> |
| 9 | Modbus ASCII mode, protocol <7,N,1> |
| 10 | Modbus ASCII mode, protocol <7,E,2> |
| 11 | Modbus ASCII mode, protocol <7,O,2> |

🕮 1. Control by PC or PLC

★A VFD-E can be set up to communicate in Modbus networks using one of the following modes: ASCII (American Standard Code for Information Interchange) or RTU (Remote Terminal Unit). Users can select the desired mode along with the serial port communication protocol in Pr.09.04.

★Code Description:

The CPU will be about 1 second delay when using communication reset. Therefore, there is at least 1 second delay time in master station.

**ASCII mode:**

Each 8-bit data is the combination of two ASCII characters. For example, a 1-byte data:

64 Hex, shown as ‘64’ in ASCII, consists of ‘6’ (36Hex) and ‘4’ (34Hex).

| Character | ‘0’ | ‘1’ | ‘2’ | ‘3’ | ‘4’ | ‘5’ | ‘6’ | ‘7’ |
|---|---|---|---|---|---|---|---|---|
| ASCII code | 30H | 31H | 32H | 33H | 34H | 35H | 36H | 37H |

| Character | ‘8’ | ‘9’ | ‘A’ | ‘B’ | ‘C’ | ‘D’ | ‘E’ | ‘F’ |
|---|---|---|---|---|---|---|---|---|
| ASCII code | 38H | 39H | 41H | 42H | 43H | 44H | 45H | 46H |

**RTU mode:**

Each 8-bit data is the combination of two 4-bit hexadecimal characters. For example, 64 Hex.

2. Data Format

10-bit character frame (For ASCII):

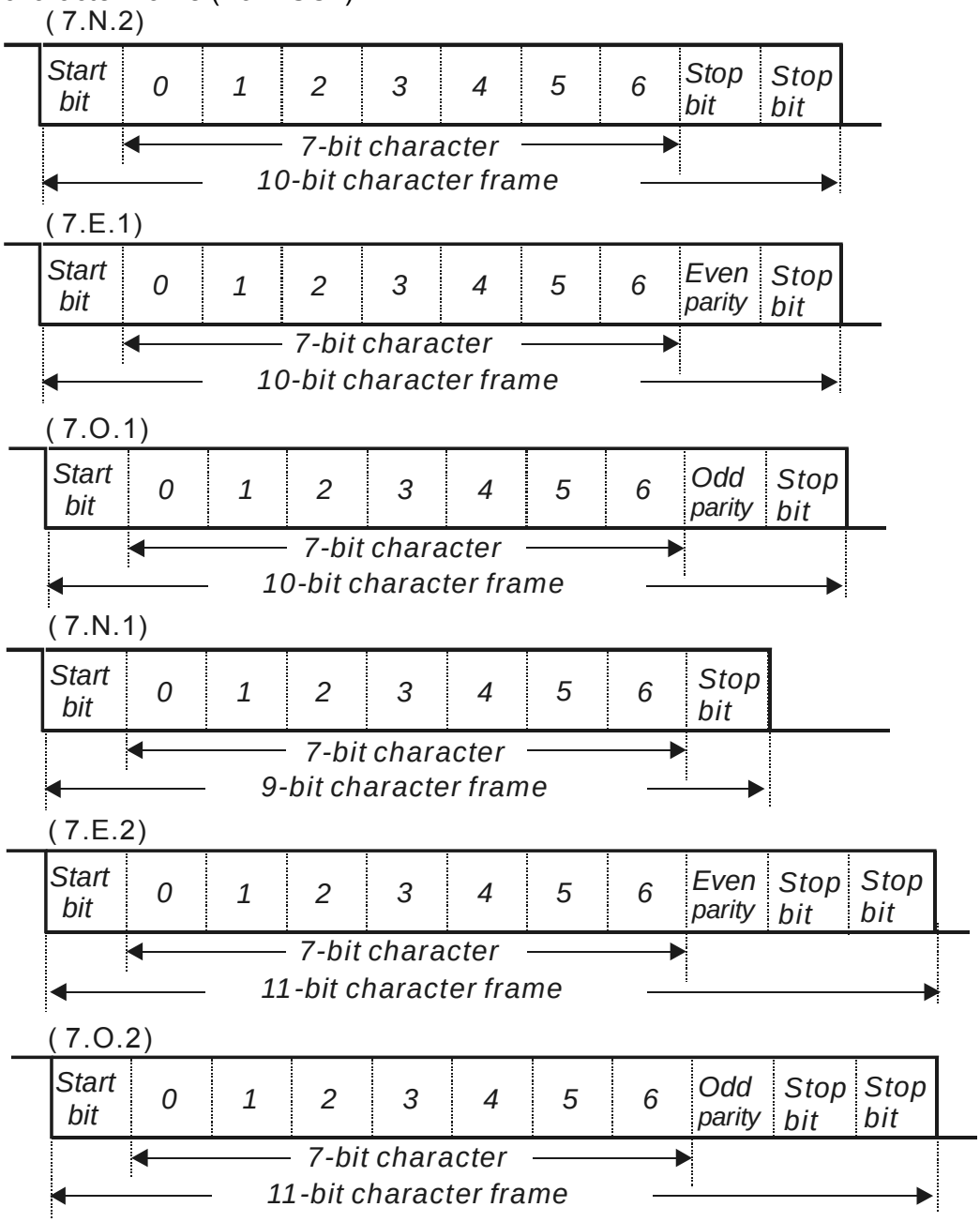

11-bit character frame (For RTU):

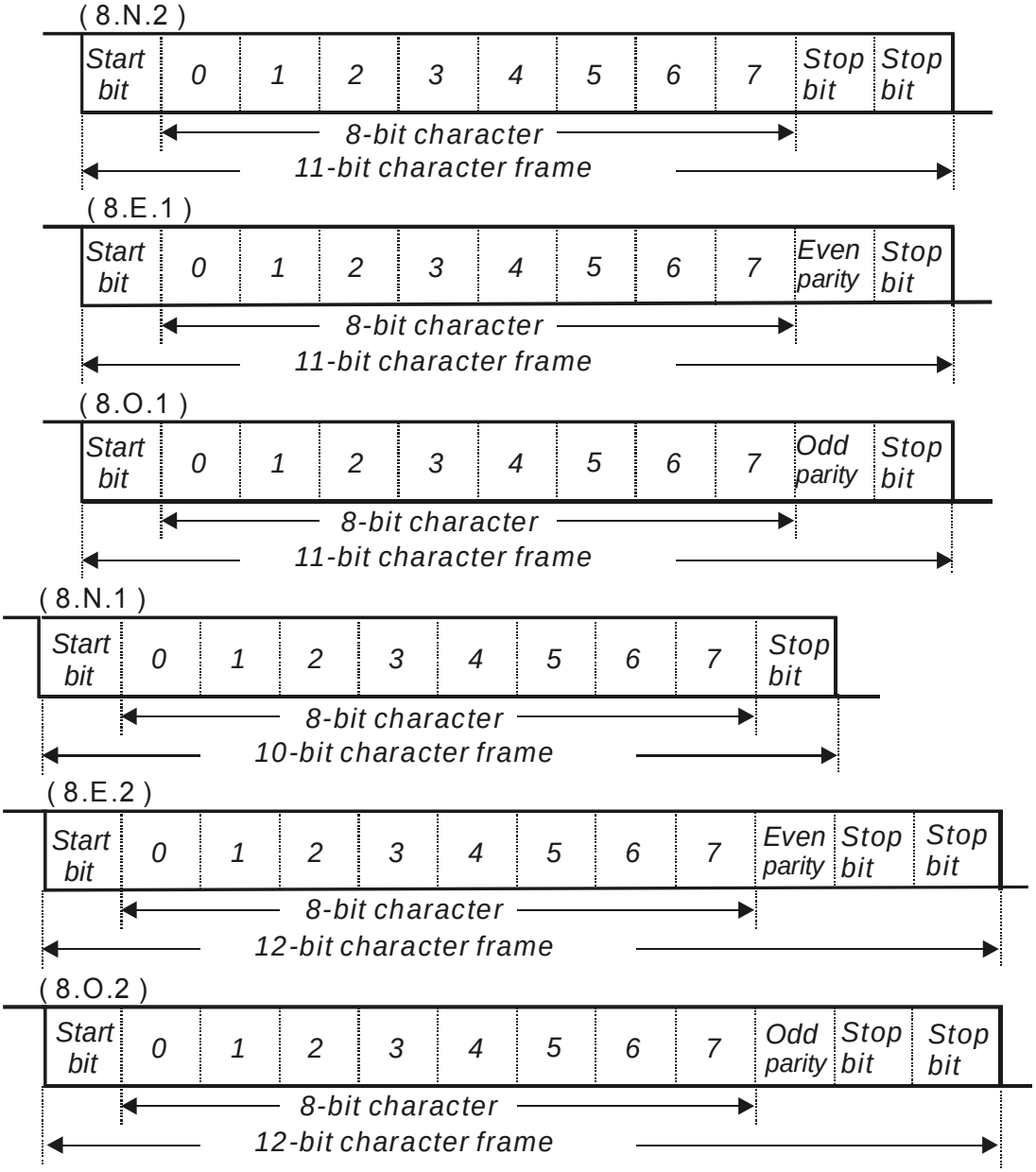


3. Communication Protocol

3.1 Communication Data Frame:

**ASCII mode:**

| | |
|---|---|
| STX | Start character ':' (3AH) |
| Address Hi | Communication address:<br>8-bit address consists of 2 ASCII codes |
| Address Lo | |
| Function Hi | Command code:<br>8-bit command consists of 2 ASCII codes |
| Function Lo | |
| DATA (n-1)<br>to<br>DATA 0 | Contents of data:<br>Nx8-bit data consist of 2n ASCII codes<br>n<=20, maximum of 40 ASCII codes |

| | |
|---|---|
| LRC CHK Hi | LRC check sum:<br>8-bit check sum consists of 2 ASCII codes |
| LRC CHK Lo | |
| END Hi | End characters:<br>END1= CR (0DH), END0= LF(0AH) |
| END Lo | |

**RTU mode:**

| | |
|---|---|
| START | A silent interval of more than 10 ms |
| Address | Communication address: 8-bit address |
| Function | Command code: 8-bit command |
| DATA (n-1)<br>to<br>DATA 0 | Contents of data:<br>n×8-bit data, n<=40 (20 x 16-bit data) |
| CRC CHK Low | CRC check sum:<br>16-bit check sum consists of 2 8-bit characters |
| CRC CHK High | |
| END | A silent interval of more than 10 ms |

3.2 Address (Communication Address)

Valid communication addresses are in the range of 0 to 254. A communication address equal to 0, means broadcast to all AC drives (AMD). In this case, the AMD will not reply any message to the master device.

00H: broadcast to all AC drives
01H: AC drive of address 01
0FH: AC drive of address 15
10H: AC drive of address 16
:
FEH: AC drive of address 254

For example, communication to AMD with address 16 decimal (10H):
ASCII mode: Address=’1’,’0’ => ‘1’=31H, ‘0’=30H
RTU mode: Address=10H

3.3 Function (Function code) and DATA (data characters)

The format of data characters depends on the function code.

03H: read data from register
06H: write single register
08H: loop detection
10H: write multiple registers

The available function codes and examples for VFD-E are described as follows:

(1) 03H: multi read, read data from registers.

Example: reading continuous 2 data from register address 2102H, AMD address is 01H.

ASCII mode:

Command message:

| | |
|---|---|
| STX | ':' |
| Address | '0' |
| | '1' |
| Function | '0' |
| | '3' |
| Starting data address | '2' |
| | '1' |
| | '0' |
| | '2' |
| Number of data (count by word) | '0' |
| | '0' |
| | '0' |
| | '2' |
| LRC Check | 'D' |
| | '7' |
| END | CR |
| | LF |

Response message:

| | |
|---|---|
| STX | ':' |
| Address | '0' |
| | '1' |
| Function | '0' |
| | '3' |
| Number of data (Count by byte) | '0' |
| | '4' |
| Content of starting address 2102H | '1' |
| | '7' |
| | '7' |
| | '0' |
| Content of address 2103H | '0' |
| | '0' |
| | '0' |
| | '0' |
| LRC Check | '7' |
| | '1' |
| END | CR |
| | LF |

RTU mode:

Command message:

| | |
|---|---|
| Address | 01H |
| Function | 03H |
| Starting data address | 21H |
| | 02H |
| Number of data (count by word) | 00H |
| | 02H |
| CRC CHK Low | 6FH |
| CRC CHK High | F7H |

Response message:

| | |
|---|---|
| Address | 01H |
| Function | 03H |
| Number of data (count by byte) | 04H |
| Content of address 2102H | 17H |
| | 70H |
| Content of address 2103H | 00H |
| | 00H |
| CRC CHK Low | FEH |
| CRC CHK High | 5CH |

(2) 06H: single write, write single data to register.

Example: writing data 6000(1770H) to register 0100H. AMD address is 01H.

ASCII mode:

Command message:

| | |
|---|---|
| STX | ':' |
| Address | '0' |
| | '1' |
| Function | '0' |
| | '6' |
| Data address | '0' |
| | '1' |
| | '0' |
| | '0' |
| Data content | '1' |
| | '7' |
| | '7' |
| | '0' |
| LRC Check | '7' |
| | '1' |
| END | CR |
| | LF |

Response message:

| | |
|---|---|
| STX | ':' |
| Address | '0' |
| | '1' |
| Function | '0' |
| | '6' |
| Data address | '0' |
| | '1' |
| | '0' |
| | '0' |
| Data content | '1' |
| | '7' |
| | '7' |
| | '0' |
| LRC Check | '7' |
| | '1' |
| END | CR |
| | LF |

RTU mode:

Command message:

| | |
|---|---|
| Address | 01H |
| Function | 06H |
| Data address | 01H |
| | 00H |
| Data content | 17H |
| | 70H |
| CRC CHK Low | EEH |
| CRC CHK High | 1FH |

Response message:

| | |
|---|---|
| Address | 01H |
| Function | 06H |
| Data address | 01H |
| | 00H |
| Data content | 17H |
| | 70H |
| CRC CHK Low | EEH |
| CRC CHK High | 1FH |

(3) 08H: loop detection

This command is used to detect if the communication between master device (PC or PLC) and AC motor drive is normal. The AC motor drive will send the received message to the master device.

ASCII mode:

Command message:

| | |
|---|---|
| STX | ':' |
| Address | '0' |
| | '1' |
| Function | '0' |
| | '8' |
| Data address | '0' |
| | '0' |
| | '0' |
| | '0' |
| Data content | '1' |
| | '7' |
| | '7' |
| | '0' |
| LRC Check | '7' |
| | '0' |
| END | CR |
| | LF |

Response message:

| | |
|---|---|
| STX | ':' |
| Address | '0' |
| | '1' |
| Function | '0' |
| | '8' |
| Data address | '0' |
| | '0' |
| | '0' |
| | '0' |
| Data content | '1' |
| | '7' |
| | '7' |
| | '0' |
| LRC Check | '7' |
| | '0' |
| END | CR |
| | LF |

RTU mode:

Command message:

| | |
|---|---|
| Address | 01H |
| Function | 08H |
| Data address | 00H |
| | 00H |
| Data content | 17H |
| | 70H |
| CRC CHK Low | EEH |
| CRC CHK High | 1FH |

Response message:

| | |
|---|---|
| Address | 01H |
| Function | 08H |
| Data address | 00H |
| | 00H |
| Data content | 17H |
| | 70H |
| CRC CHK Low | EEH |
| CRC CHK High | 1FH |

(4) 10H: write multiple registers (write multiple data to registers)

Example: Set the multi-step speed,

Pr.05.00=50.00 (1388H), Pr.05.01=40.00 (0FA0H). AC drive address is 01H.

ASCII Mode:

Command message:

| | |
|---|---|
| STX | ':' |
| Address 1 | '0' |
| Address 0 | '1' |
| Function 1 | '1' |
| Function 0 | '0' |
| Starting data address | '0' |
| | '5' |
| | '0' |
| | '0' |
| Number of data (count by word) | '0' |
| | '0' |
| | '0' |
| | '2' |
| Number of data (count by byte) | '0' |
| | '4' |
| The first data content | '1' |
| | '3' |
| | '8' |
| | '8' |
| The second data content | '0' |
| | 'F' |
| | 'A' |
| | '0' |
| LRC Check | '9' |
| | 'A' |
| END | CR |
| | LF |

Response message:

| | |
|---|---|
| STX | ':' |
| Address 1 | '0' |
| Address 0 | '1' |
| Function 1 | '1' |
| Function 0 | '0' |
| Starting data address | '0' |
| | '5' |
| | '0' |
| | '0' |
| Number of data (count by word) | '0' |
| | '0' |
| | '0' |
| | '2' |
| LRC Check | 'E' |
| | '8' |
| END | CR |
| | LF |

RTU mode:

Command message:

| | |
|---|---|
| Address | 01H |
| Function | 10H |
| Starting data address | 05H |
| | 00H |
| Number of data (count by word) | 00H' |
| | 02H |
| Number of data (count by byte) | 04 |
| The first data content | 13H |
| | 88H |
| The second data content | 0FH |
| | A0H |
| CRC Check Low | 4DH |
| CRC Check High | D9H |

Response message:

| | |
|---|---|
| Address | 01H |
| Function | 10H |
| Starting data address | 05H |
| | 00H |
| Number of data (count by word) | 00H |
| | 02H |
| CRC Check Low | 41H |
| CRC Check High | 04H |

3.4 Check sum

ASCII mode:

LRC (Longitudinal Redundancy Check) is calculated by summing up, module 256, the values of the bytes from ADR1 to last data character then calculating the hexadecimal representation of the 2's-complement negation of the sum.

For example, reading 1 word from address 0401H of the AC drive with address 01H.

| | |
|---|---|
| STX | ':' |
| Address 1 | '0' |
| Address 0 | '1' |
| Function 1 | '0' |
| Function 0 | '3' |
| Starting data address | '0' |
| | '4' |
| | '0' |
| | '1' |
| Number of data | '0' |
| | '0' |
| | '0' |
| | '1' |
| LRC Check 1 | 'F' |
| LRC Check 0 | '6' |
| END 1 | CR |
| END 0 | LF |

01H+03H+04H+01H+00H+01H=0AH, the 2's-complement negation of 0AH is F6H.

RTU mode:

| | |
|---|---|
| Address | 01H |
| Function | 03H |
| Starting data address | 21H |
| | 02H |
| Number of data (count by word) | 00H |
| | 02H |
| CRC CHK Low | 6FH |
| CRC CHK High | F7H |

CRC (Cyclical Redundancy Check) is calculated by the following steps:

Step 1: Load a 16-bit register (called CRC register) with FFFFH.

Step 2: Exclusive OR the first 8-bit byte of the command message with the low order byte of the 16-bit CRC register, putting the result in the CRC register.

Step 3: Examine the LSB of CRC register.

Step 4: If the LSB of CRC register is 0, shift the CRC register one bit to the right with MSB zero filling, then repeat step 3. If the LSB of CRC register is 1, shift the CRC register one bit to the right with MSB zero filling, Exclusive OR the CRC register with the polynomial value A001H, then repeat step 3.

Step 5: Repeat step 3 and 4 until eight shifts have been performed. When this is done, a complete 8-bit byte will have been processed.

Step 6: Repeat step 2 to 5 for the next 8-bit byte of the command message. Continue doing this until all bytes have been processed. The final contents of the CRC register are the CRC value. When transmitting the CRC value in the message, the upper and lower bytes of the CRC value must be swapped, i.e. the lower order byte will be transmitted first.

The following is an example of CRC generation using C language. The function takes two arguments:
Unsigned char* data ← a pointer to the message buffer
Unsigned char length ← the quantity of bytes in the message buffer
The function returns the CRC value as a type of unsigned integer.

```
Unsigned int crc_chk(unsigned char* data, unsigned char length){
  int j;
  unsigned int reg_crc=0xFFFF;
  while(length--){
    reg_crc ^= *data++;
    for(j=0;j<8;j++){
      if(reg_crc & 0x01){  /* LSB(b0)=1 */
        reg_crc=(reg_crc>>1) ^ 0xA001;
      }else{
        reg_crc=reg_crc >>1;
      }
    }
  }
 return reg_crc;
}
```

3.5 Address list
The contents of available addresses are shown as below:

| Content | Address | Function | |
|---|---|---|---|
| AC drive Parameters | GGnnH | GG means parameter group, nn means parameter number, for example, the address of Pr 04.01 is 0401H. Refer to chapter 5 for the function of each parameter. When reading parameter by command code 03H, only one parameter can be read at one time. | |
| Command Write only | 2000H | Bit 0-1 | 00B: No function<br>01B: Stop<br>10B: Run<br>11B: Jog + Run |
| | | Bit 2-3 | Reserved |
| | | Bit 4-5 | 00B: No function<br>01B: FWD<br>10B: REV<br>11B: Change direction |
| | | Bit 6-7 | 00B: Comm. forced 1st accel/decel<br>01B: Comm. forced 2nd accel/decel |

| Content | Address | Function | |
|---|---|---|---|
| | | Bit 8-15 | Reserved |
| | 2001H | Frequency command | |
| | 2002H | Bit 0 | 1: EF (external fault) on |
| | | Bit 1 | 1: Reset |
| | | Bit 2-15 | Reserved |
| Status monitor<br>Read only | 2100H | Error code: | |
| | | 0: No error occurred | |
| | | 1: Over-current (oc) | |
| | | 2: Over-voltage (ov) | |
| | | 3: IGBT Overheat (oH1) | |
| | | 4: Reserved | |
| | | 5: Overload (oL) | |
| | | 6: Overload1 (oL1) | |
| | | 7: Overload2 (oL2) | |
| | | 8: External fault (EF) | |
| | | 9: Current exceeds 2 times rated current during accel (ocA) | |
| | | 10: Current exceeds 2 times rated current during decel (ocd)<br>Current exceeds 2 times rated current during decel (ocd) | |
| | | 11: Current exceeds 2 times rated current during steady state operation (ocn) | |
| | | 12: Ground Fault (GFF) | |
| | | 13: Low voltage (Lv) | |
| | | 14: PHL (Phase-Loss) | |
| | 2100H | 15: External Base Block (bb) | |
| | | 16: Auto accel/decel failure (cFA) | |
| | | 17: Software protection enabled (codE) | |
| | | 18: Power Board CPU WRITE failure (CF1.0) | |
| | | 19: Power Board CPU READ failure (CF2.0) | |
| | | 20: CC, OC Hardware protection failure (HPF1) | |
| | | 21: OV Hardware protection failure (HPF2) | |

| Content | Address | Function | |
|---|---|---|---|
| | | 22: GFF Hardware protection failure (HPF3) | |
| | | 23: OC Hardware protection failure (HPF4) | |
| | | 24: U-phase error (cF3.0) | |
| | | 25: V-phase error (cF3.1) | |
| | | 26: W-phase error (cF3.2) | |
| | | 27: DCBUS error (cF3.3) | |
| | | 28: IGBT Overheat (cF3.4) | |
| | | 29: Reserved | |
| | | 30: Control Board CPU WRITE failure (cF1.1) | |
| | | 31: Control Board CPU WRITE failure (cF2.1) | |
| | | 32: ACI signal error (AErr) | |
| | | 33: Reserved | |
| | | 34: Motor PTC overheat protection (PtC1) | |
| | | 35: PG feedback signal error (PGEr) | |
| | | 36~39: Reserved | |
| | | 40: Communication time-out error of control board and power board (CP10) | |
| | | 41: dEb error | |
| | | 42: ACL (Abnormal Communication Loop) | |
| | | 66: U phase output phase loss (oPHL1) | |
| | | 67: V phase output phase loss (oPHL2) | |
| | | 68: W phase output phase loss (oPHL3) | |
| | 2101H | Status of AC drive | |
| | | Bit 0-1 | 00B: RUN LED is off, STOP LED is on (The AC motor Drive stops) |
| | | | 01B: RUN LED blinks, STOP LED is on (When AC motor drive decelerates to stop) |
| | | | 10B: RUN LED is on, STOP LED blinks (When AC motor drive is standby) |
| | | | 11B: RUN LED is on, STOP LED is off (When AC motor drive runs) |

| Content | Address | Function | |
|---|---|---|---|
| | | Bit 2 | 1: JOG command |
| | | Bit 3-4 | 00B: FWD LED is on, REV LED is off (When AC motor drive runs forward) |
| | | | 01B: FWD LED is on, REV LED blinks (When AC motor drive runs from reverse to forward) |
| | | | 10B: FWD LED blinks, REV LED is on (When AC motor drive runs from forward to reverse) |
| | | | 11B: FWD LED is off, REV LED is on (When AC motor drive runs reverse) |
| | | Bit 5-7 | Reserved |
| | | Bit 8 | 1: Master frequency Controlled by communication interface |
| | | Bit 9 | 1: Master frequency controlled by analog signal |
| | | Bit 10 | 1: Operation command controlled by communication interface |
| | | Bit 11-15 | Reserved |
| | 2102H | Frequency command (F) | |
| | 2103H | Output frequency (H) | |
| | 2104H | Output current (AXXX.X) | |
| | 2105H | Reserved | |
| | 2106H | Reserved | |
| | 2107H | Reserved | |
| | 2108H | DC-BUS Voltage (UXXX.X) | |
| | 2109H | Output voltage (EXXX.X) | |
| | 210AH | Display temperature of IGBT (°C) | |
| | 2116H | User defined (Low word) | |
| | 2117H | User defined (High word) | |

Note: 2116H is number display of Pr.00.04. High byte of 2117H is number of decimal places of 2116H. Low byte of 2117H is ASCII code of alphabet display of Pr.00.04.

3.6 Exception response:

The AC motor drive is expected to return a normal response after receiving command messages from the master device. The following depicts the conditions when no normal response is replied to the master device.

The AC motor drive does not receive the messages due to a communication error; thus, the AC motor drive has no response. The master device will eventually process a timeout condition.

The AC motor drive receives the messages without a communication error, but cannot handle them. An exception response will be returned to the master device and an error message “CExx” will be displayed on the keypad of AC motor drive. The xx of “CExx” is a decimal code equal to the exception code that is described below.

In the exception response, the most significant bit of the original command code is set to 1, and an exception code which explains the condition that caused the exception is returned.

Example of an exception response of command code 06H and exception code 02H:

**ASCII mode:**

| | |
|---|---|
| STX | ‘:’ |
| Address Low | ‘0’ |
| Address High | ‘1’ |
| Function Low | ‘8’ |
| Function High | ‘6’ |
| Exception code | ‘0’ |
| | ‘2’ |
| LRC CHK Low | ‘7’ |
| LRC CHK High | ‘7’ |
| END 1 | CR |
| END 0 | LF |

**RTU mode:**

| | |
|---|---|
| Address | 01H |
| Function | 86H |
| Exception code | 02H |
| CRC CHK Low | C3H |
| CRC CHK High | A1H |

The explanation of exception codes:

| **Exception code** | Explanation |
|---|---|
| 01 | Illegal function code:<br>The function code received in the command message is not available for the AC motor drive. |
| 02 | Illegal data address:<br>The data address received in the command message is not available for the AC motor drive. |
| 03 | Illegal data value:<br>The data value received in the command message is not available for the AC drive. |
| 04 | Slave device failure:<br>The AC motor drive is unable to perform the requested action. |

| **Exception code** | Explanation |
|---|---|
| 10 | Communication time-out:<br>If Pr.09.03 is not equal to 0.0, Pr.09.02=0~2, and there is no communication on the bus during the Time Out detection period (set by Pr.09.03), “cE10” will be shown on the keypad. |

3.7 Communication program of PC:

The following is a simple example of how to write a communication program for Modbus ASCII mode on a PC in C language.

```
#include<stdio.h>
#include<dos.h>
#include<conio.h>
#include<process.h>
#define PORT 0x03F8  /* the address of COM1 */
/* the address offset value relative to COM1 */
#define THR  0x0000
#define RDR  0x0000
#define BRDL  0x0000
#define IER  0x0001
#define BRDH 0x0001
#define LCR  0x0003
#define MCR  0x0004
#define LSR  0x0005
#define MSR  0x0006
unsigned char rdat[60];
/* read 2 data from address 2102H of AC drive with address 1 */
unsigned char tdat[60]={':','0','1','0','3','2','1','0','2', '0','0','0','2','D','7','\r','\n'};
void main(){
int i;
outportb(PORT+MCR,0x08);          /* interrupt enable */
outportb(PORT+IER,0x01);          /* interrupt as data in */
outportb(PORT+LCR,(inportb(PORT+LCR) | 0x80));
/* the BRDL/BRDH can be access as LCR.b7==1 */
outportb(PORT+BRDL,12);           /* set baudrate=9600, 12=115200/9600*/
outportb(PORT+BRDH,0x00);
outportb(PORT+LCR,0x06);          /* set protocol, <7,N,2>=06H, <7,E,1>=1AH,
<7,O,1>=0AH, <8,N,2>=07H, <8,E,1>=1BH, <8,O,1>=0BH   */
for(i=0;i<=16;i++){
while(!(inportb(PORT+LSR) & 0x20)); /* wait until THR empty */
outportb(PORT+THR,tdat[i]);       /* send data to THR */    }
i=0;
while(!kbhit()){
if(inportb(PORT+LSR) & 0x01){ /* b0==1, read data ready */
rdat[i++]=inportb(PORT+RDR); /* read data form RDR */
}   }    }
```

| | |
|---|---|
| **09.05** | Reserved |
| **09.06** | Reserved |

| | | |
|---|---|---|
| **09.07** | ✓Response Delay Time | Unit: 2ms |
| | Settings 0 ~ 200 (400msec) | Factory Setting: 1 |

This parameter is the response delay time after AC drive receives communication command as shown in the following. 1 unit = 2 msec.

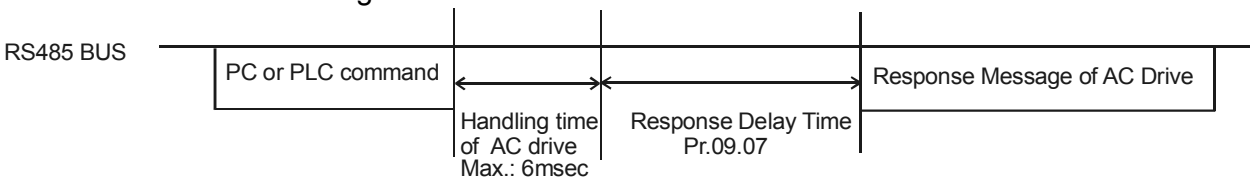

**09.08** ✓Transmission Speed for USB Card

Factory Setting: 2

| | | |
|---|---|---|
| Settings | 0 | Baud rate 4800 bps |
| | 1 | Baud rate 9600 bps |
| | 2 | Baud rate 19200 bps |
| | 3 | Baud rate 38400 bps |
| | 4 | Baud rate 57600 bps |

This parameter is used to set the transmission speed for USB card.

**09.09** ✓Communication Protocol for USB Card

Factory Setting: 1

| | | |
|---|---|---|
| Settings | 0 | Modbus ASCII mode, protocol <7,N,2> |
| | 1 | Modbus ASCII mode, protocol <7,E,1> |
| | 2 | Modbus ASCII mode, protocol <7,O,1> |
| | 3 | Modbus RTU mode, protocol <8,N,2> |
| | 4 | Modbus RTU mode, protocol <8,E,1> |
| | 5 | Modbus RTU mode, protocol <8,O,1> |
| | 6 | Modbus RTU mode, protocol <8,N,1> |
| | 7 | Modbus RTU mode, protocol <8,E,2> |
| | 8 | Modbus RTU mode, protocol <8,O,2> |
| | 9 | Modbus ASCII mode, protocol <7,N,1> |
| | 10 | Modbus ASCII mode, protocol <7,E,2> |
| | 11 | Modbus ASCII mode, protocol <7,O,2> |

**09.10** ✓Transmission Fault Treatment for USB Card

Factory Setting: 0

| | | |
|---|---|---|
| Settings | 0 | Warn and keep operating |
| | 1 | Warn and RAMP to stop |
| | 2 | Warn and COAST to stop |
| | 3 | No warning and keep operating |

This parameter is set to how to react when transmission errors occurs.

Setting 0: when transmission errors occur, it will display warning message “cEXX” on the digital keypad and the motor will keep running. The warning message can be cleared after the communication is normal.

Setting 1: when transmission errors occur, it will display warning message “cEXX” on the digital keypad and the motor will stop by the deceleration time (Pr.01.10/01.12). It needs to press “RESET” to clear the warning message.

Setting 2: When transmission errors occur, it will display warning message “cEXX” on the digital keypad and the motor will free run to stop immediately. It needs to press “RESET” to clear the warning message.

- Setting 3: When transmission errors occur, it won't display any warning message on the digital keypad and the motor will still keep running.
- See list of error messages below (see section 3.6 in Pr.09.04)

**NOTE**

The digital keypad is optional. Please refer to Appendix B for details. When using without this optional keypad, the FAULT LED will be ON once there is error messages or warning messages from the external terminals.

| **09.11** | ✓Time-out Detection for USB Card | Unit: second |
|---|---|---|
| Settings | 0.0 to 120.0 sec | Factory Setting: 0.0 |
| | 0.0 Disable | |

| **09.12** | COM port for PLC Communication (NOT for VFD*E*C models) | |
|---|---|---|
| | | Factory Setting: 0 |
| Settings | 0 RS485 | |
| | 1 USB card | |

# Group 10: PID Control

A. Common applications for PID control

1. Flow control: A flow sensor is used to feedback the flow data and perform accurate flow control.

2. Pressure control: A pressure sensor is used to feedback the pressure data and perform precise pressure control.

3. Air volume control: An air volume sensor is used to feedback the air volume data to have excellent air volume regulation.

4. Temperature control: A thermocouple or thermistor is used to feedback temperature data for comfortable temperature control.

5. Speed control: A speed sensor or encoder is used to feedback motor shaft speed or input another machines speed as a target value for closed loop speed control of master-slave operation.

Pr.10.00 sets the PID setpoint source (target value). PID control operates with the feedback signal as set by Pr.10.01 either 0~+10V voltage or 4-20mA current.

B. PID control loop:

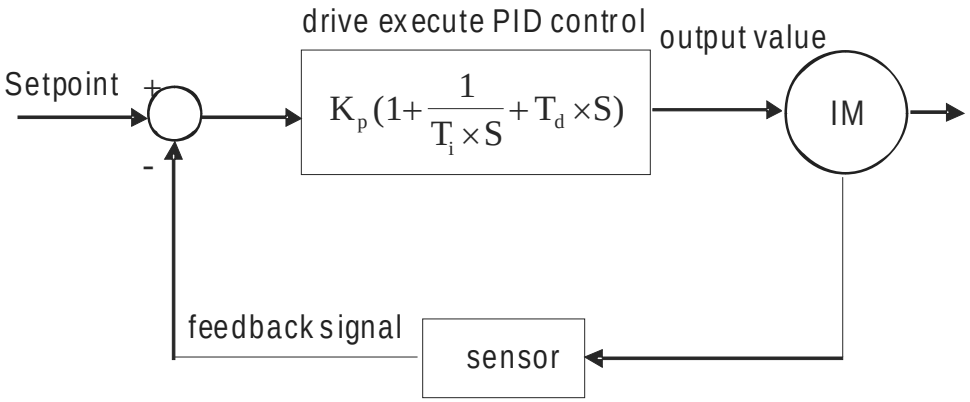


$K_p$: Proportional gain(P) $T_i$: Integral time(I) $T_d$: Derivative control(D) $S$: Operator

C. Concept of PID control

1. Proportional gain(P): the output is proportional to input. With only proportional gain control, there will always be a steady-state error.

2. Integral time(I): the controller output is proportional to the integral of the controller input. To eliminate the steady-state error, an “integral part” needs to be added to the controller. The integral time decides the relation between integral part and error. The integral part will be increased by time even if the error is small. It gradually increases the controller output to eliminate the error until it is 0.

In this way a system can be stable without steady-state error by proportional gain control and integral time control.

3. Differential control (D): the controller output is proportional to the differential of the controller input. During elimination of the error, oscillation or instability may occur. The differential control can be used to suppress these effects by acting before the error. That is, when the error is near 0, the differential control should be 0. Proportional gain (P) + differential control (D) can be used to improve the system state during PID adjustment.

D. When PID control is used in a constant pressure pump feedback application:

Set the application's constant pressure value (bar) to be the setpoint of PID control. The pressure sensor will send the actual value as PID feedback value. After comparing the PID setpoint and PID feedback, there will be an error. Thus, the PID controller needs to calculate the output by using proportional gain(P), integral time(I) and differential time(D) to control the pump. It controls the drive to have different pump speed and achieves constant pressure control by using a 4-20mA signal corresponding to 0-10 bar as feedback to the drive.

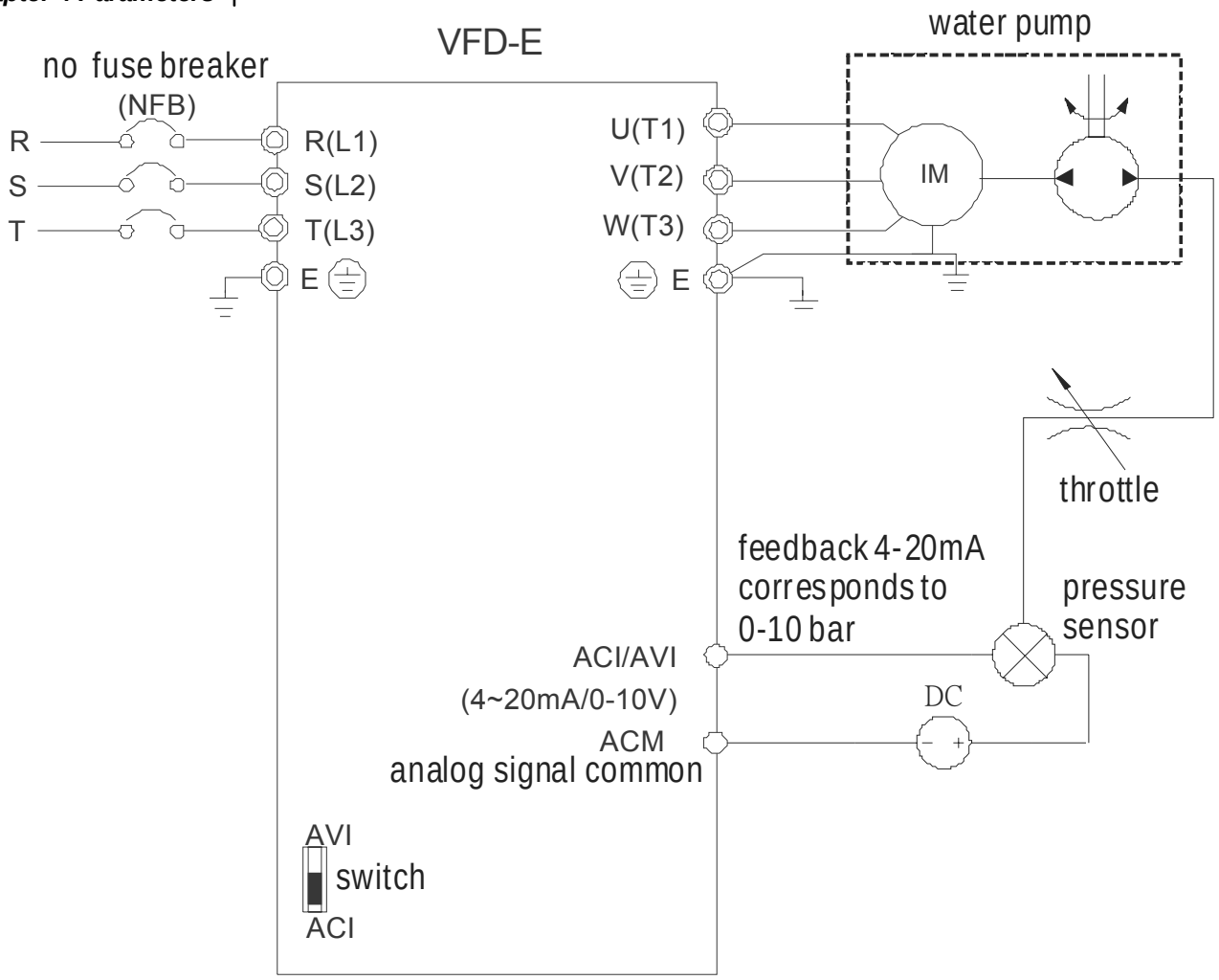


1. Pr.00.04 is set to 5 (Display PID analog feedback signal value (b) (%))

2. Pr.01.09 Acceleration Time will be set as required

3. Pr.01.10 Deceleration Time will be set as required

4. Pr.02.01=1 to operate from the digital keypad

5. Pr.10.00=1, the setpoint is controlled by the digital keypad

6. Pr.10.01=3(Negative PID feedback from external terminal ACI (4 ~ 20mA)/ AVI2 (0 ~ +10VDC))

7. Pr.10.01-10.17 will be set as required

7.1 When there is no vibration in the system, increase Pr.10.02(Proportional Gain (P))

7.2 When there is no vibration in the system, reduce Pr.10.03(Integral Time (I))

7.3 When there is no vibration in the system, increase Pr.10.04(Differential Time(D))

8. Refer to Pr.10.00-10.17 for PID parameters settings.

| 10.00 | PID Set Point Selection |
|---|---|

Factory Setting: 0

| | | |
|---|---|---|
| Settings | 0 | Disable |
| | 1 | Digital keypad UP/DOWN keys |
| | 2 | AVI 0 ~ +10VDC |
| | 3 | ACI 4 ~ 20mA / AVI2 0 ~ +10VDC |
| | 4 | PID set point (Pr.10.11) |

| 10.01 | Input Terminal for PID Feedback |
|---|---|

Factory Setting: 0

| | | |
|---|---|---|
| Settings | 0 | **Positive** PID feedback from external terminal AVI (0 ~ +10VDC). |
| | 1 | **Negative** PID feedback from external terminal AVI (0 ~ +10VDC). |
| | 2 | **Positive** PID feedback from external terminal ACI (4 ~ 20mA)/ AVI2 (0 ~ +10VDC). |
| | 3 | **Negative** PID feedback from external terminal ACI (4 ~ 20mA)/ AVI2 (0 ~ +10VDC). |

- Note that the measured variable (feedback) controls the output frequency (Hz).
- When Pr.10.00=2 or 3, the set point (Master Frequency) for PID control is obtained from the AVI or ACI/AVI2 external terminal (0 to +10V or 4-20mA) or from multi-step speed. When Pr.10.00=1, the set point is obtained from the keypad.
- When Pr.10.01=1 or 3 (Negative feedback): Error (Err) = setpoin(SP) – feedback(FB). When the feedback will be increased by the increasing output frequency, please use this setting.
- When Pr.10.01= to 0 or 2 (Positive feedback): Error (Err) =feedback(FB)- setpoint(SP) When the feedback will be decreased by the increasing output frequency, please use this setting.
- Select input terminal accordingly. Make sure this parameter setting does not conflict with the setting for Pr.10.00 (Master Frequency).
- Related parameters: Pr.00.04 Content of Multi-function Display (set to 5 Display PID analog feedback signal value (b) (%)), Pr. 10.11(Source of PID Set point) and Pr.04.19(ACI/AVI2 Selection)

| 10.11 | ⚡Source of PID Set point | Unit: Hz |
|---|---|---|

| | | |
|---|---|---|
| Settings | 0.00 to 600.00Hz<br>(Japanese version: 0.00 to 599.00 Hz ) | Factory Setting: 0.00 |

- This parameter is used in conjunction with Pr.10.00 set 4 to input a set point in Hz.

| 10.02 | ⚡Proportional Gain (P) |
|---|---|

| | | |
|---|---|---|
| Settings | 0.0 to 10.0 | Factory Setting: 1.0 |

- It is used to eliminate the system error. It is usually used to decrease the error and get the faster response speed. But if setting too large value in Pr.10.02, it may cause the system oscillation and instability.

- It can be used to set the proportional gain to decide the responds speed. The larger value is set in Pr.10.02, the faster response it will get. The smaller value is set in Pr.10.02, the slower response it will get.
- If the other two gains (I and D) are set to zero, proportional control is the only one effective.
- Related parameters: Pr.10.03(Integral Time (I)) and Pr.10.04(Differential Control (D))

| **10.03** | ✓Integral Time ( I ) | Unit: second |
|---|---|---|
| Settings | 0.00 to 100.0 sec | Factory Setting: 1.00 |
| | 0.00 Disable | |

- The integral controller is used to eliminate the error during stable system. The integral control doesn't stop working until error is 0. The integral is acted by the integral time. The smaller integral time is set, the stronger integral action will be. It is helpful to reduce overshoot and oscillation to make a stable system. At this moment, the decreasing error will be slow. The integral control is often used with other two controls to become PI controller or PID controller.
- This parameter is used to set the integral time of I controller. When the integral time is long, it will have small gain of I controller, the slower response and bad external control. When the integral time is short, it will have large gain of I controller, the faster response and rapid external control.
- When the integral time is too small, it may cause system oscillation.
- When it is set to 0.0, the integral function is disabled.
- Related parameter: Pr.10.05(Upper Bound for Integral Control)

| **10.04** | ✓Differential Control (D) | Unit: second |
|---|---|---|
| Settings | 0.00 to 1.00 sec | Factory Setting: 0.00 |

- The differential controller is used to show the change of system error and it is helpful to preview the change of error. So the differential controller can be used to eliminate the error to improve system state. With the suitable differential time, it can reduce overshoot and shorten adjustment time. However, the differential operation will increase the noise interference. Please note that too large differential will cause big noise interference. Besides, the differential shows the change and the output of the differential will be 0 when there is no change. Therefore, the differential control can't be used independently. It needs to be used with other two controllers to make a PD controller or PID controller.
- This parameter can be used to set the gain of D controller to decide the response of error change. The suitable differential time can reduce the overshoot of P and I controller to decrease the oscillation and have a stable system. But too long differential time may cause system oscillation.
- The differential controller acts for the change of error and can't reduce the interference. It is not recommended to use this function in the serious interference.

| **10.05** | Upper Bound for Integral Control | Unit: % |
|---|---|---|
| Settings | 0 to 100 % | Factory Setting: 100 |

- This parameter defines an upper bound or limit for the integral gain (I) and therefore limits the Master Frequency. The formula is: Integral upper bound = Maximum Output Frequency (Pr.01.00) x (Pr.10.05).
- Too large integral value will make the slow response due to sudden load change. In this way, it may cause motor stall or machine damage.
- Related parameter: Pr.01.00(Maximum Output Frequency (Fmax))

| 10.06 | Primary Delay Filter Time | Unit: second |
|---|---|---|
| | Settings 0.0 to 2.5 sec | Factory Setting: 0.0 |

- It is used to set the time that required for the low-pass filter of PID output. Increasing the setting, it may affect the drive's response speed.
- The frequency output of PID controller will filter after primary delay filter time. It can smooth the change of the frequency output. The longer primary delay filter time is set, the slower response time it will be.
- The unsuitable primary delay filter time may cause system oscillation.
- PID control can be used for speed, pressure and flow control. It needs to use with the relevant equipment of sensor feedback for PID control. Refer to the following for the closed-loop control diagram.

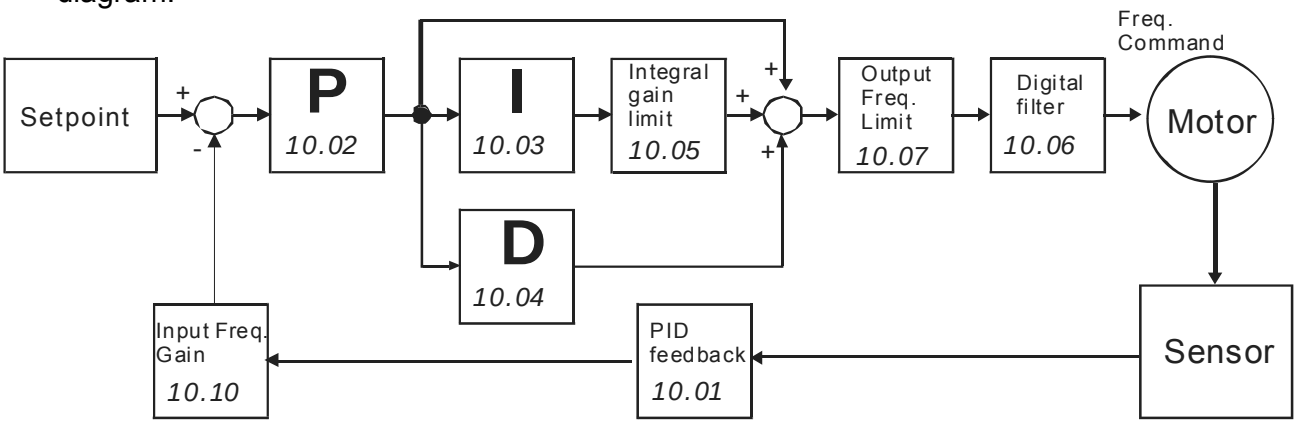


| 10.07 | PID Output Frequency Limit | Unit: % |
|---|---|---|
| | Settings 0 to 110 % | Factory Setting: 100 |

- This parameter defines the percentage of output frequency limit during the PID control. The formula is Output Frequency Limit = Maximum Output Frequency (Pr.01.00) X Pr.10.07 %. This parameter will limit the Maximum Output Frequency. An overall limit for the output frequency can be set in Pr.01.07.
- Related parameter: Pr.01.00(Maximum Output Frequency (Fmax))

| 10.08 | PID Feedback Signal Detection Time | Unit: second |
|---|---|---|
| | Settings 0.0 to d 3600 sec | Factory Setting: 60.0 |

- This parameter defines the time during which the PID feedback must be abnormal before a warning (see Pr.10.09) is given. It also can be modified according to the system feedback signal time.
- If this parameter is set to 0.0, the system would not detect any abnormality signal.
- If it doesn't receive PID feedback signal over Pr.10.08 setting, the feedback signal fault will occur and please refer to Pr.10.09 for the fault treatment.
- Related parameter: Pr.10.09(Treatment of the Erroneous PID Feedback Signals)

| **10.09** | Treatment of the Erroneous Feedback Signals (for PID feedback error) |
|---|---|

Factory Setting: 0

| Settings | 0 | Warning and RAMP to stop |
|---|---|---|
| | 1 | Warning and COAST to stop |
| | 2 | Warning and keep operating |

- AC motor drive action when the feedback signals (analog PID feedback) are abnormal according to Pr.10.16.
- Setting Pr.10.09 to 0: When the feedback signal fault occurs, it will display “FbE” on the digital keypad and the motor will stop to 0Hz by Pr.01.10/Pr.01.12 setting. It needs to clear “RESET” to clear the warning message.
- Setting Pr.10.09 to 1: When the feedback signal fault occurs, it will display “FbE” on the digital keypad and the motor will free run to stop. It needs to press “RESET” to clear the warning message.
- Setting Pr.10.09 to 2: When the feedback signal fault occurs, it will display “FbE” on the digital keypad and the motor will keep running. The warning message can be cleared after the feedback signal is normal.
- Related parameters” Pr.10.00(PID Set Point Selection), Pr.10.01(Input Terminal for PID Feedback), Pr.10.12(PID Offset Level) and Pr.10.13(Detection Time of PID Offset)

**NOTE**

The digital keypad is optional. Please refer to Appendix B for details. When using without this optional keypad, the FAULT LED will be ON once there is error messages or warning messages from the external terminals.

| **10.10** | Gain Over the PID Detection Value |
|---|---|

| Settings | 0.0 to 10.0 | Factory Setting: 1.0 |
|---|---|---|

- This is the gain adjustment over the feedback detection value.
- This parameter will affect Pr.00.04(setting 5) directly. That is Pr.00.04(setting 5) Display PID analog feedback signal value (b) (%)= PID detection value X Gain Over the PID Detection Value.
- Related parameters: Pr.00.04(Content of Multi-function Display) and Pr.10.01(Input Terminal for PID Feedback)

| **10.12** | PID Offset Level | Unit: % |
|---|---|---|

| Settings | 1.0 to 50.0% | Factory Setting: 10.0 |
|---|---|---|

- This parameter is used to set max. allowable value of PID error.

| **10.13** | Detection Time of PID Offset | Unit: second |
|---|---|---|

| Settings | 0.1 to 300.0 sec | Factory Setting: 5.0 |
|---|---|---|

- This parameter is used to set detection of the offset between set point and feedback.

- When the offset is higher than the setting of Pr.10.12 for a time exceeding the setting of Pr.10.13, PID feedback signal fault occurs and operates by the treatment set in Pr.10.09.
- Related parameters: Pr.10.00(PID Set Point Selection), Pr.10.01(Input Terminal for PID Feedback), Pr.10.09(Treatment of the Erroneous PID Feedback Signals) and Pr.10.12(PID Offset Level)

| **10.17** | Minimum PID Output Frequency Selection |
|---|---|

Factory Setting: 0

| Settings | 0 | By PID control |
|---|---|---|
| | 1 | By Minimum output frequency (Pr.01.05) |

- This is the source selection of minimum output frequency when control is by PID.
- The output of the AC motor drive will refer to this parameter setting. When this parameter is set to 0, the output frequency will output by the calculation of PID. When this parameter is set to 1 and Pr.01.08 is not set to 0, the output frequency=Pr.01.08 setting. Otherwise, the output frequency=Pr.01.05 setting.
- Related parameters: Pr.01.05(Minimum Output Frequency (Fmin) (Motor 0)) and Pr.01.08(Output Frequency Lower Limit)

| **10.14** | Sleep/Wake Up Detection Time | Unit: second |
|---|---|---|

| Settings | 0.0 to 6550 sec | Factory Setting: 0.0 |
|---|---|---|

- If PID frequency is less than the sleep frequency when the drive starts running, the drive will be in sleep mode immediately and won't limit by this parameter.
- Related parameters: Pr.10.15(Sleep Frequency) and Pr.10.16(Wakeup Frequency)

| **10.15** | Sleep Frequency | Unit: Hz |
|---|---|---|

| Settings | 0.00 to Fmax Hz | Factory Setting: 0.00 |
|---|---|---|

- This parameter set the frequency for the AC motor drive to be in sleep mode.
- The AC motor drive will stop outputting after being sleep mode, but PID controller keep operating.

| **10.16** | Wakeup Frequency | Unit: Hz |
|---|---|---|

| Settings | 0.00 to Fmax Hz | Factory Setting: 0.00 |
|---|---|---|

- This parameter is used to set the wakeup frequency to restart the AC motor drive after sleep mode.
- The wake up frequency must be higher than sleep frequency.
- When the actual output frequency $\leq$ Pr.10.15 and the time exceeds the setting of Pr.10.14, the AC motor drive will be in sleep mode and the motor will decelerate to stop by Pr.01.10/01.12 setting.
- When the actual frequency command > Pr.10.16 and the time exceeds the setting of Pr.10.14, the AC motor drive will restart.
- When the AC motor drive is in sleep mode, frequency command is still calculated by PID. When frequency reaches wake up frequency, AC motor drive will accelerate from Pr.01.05 minimum frequency following the V/f curve.

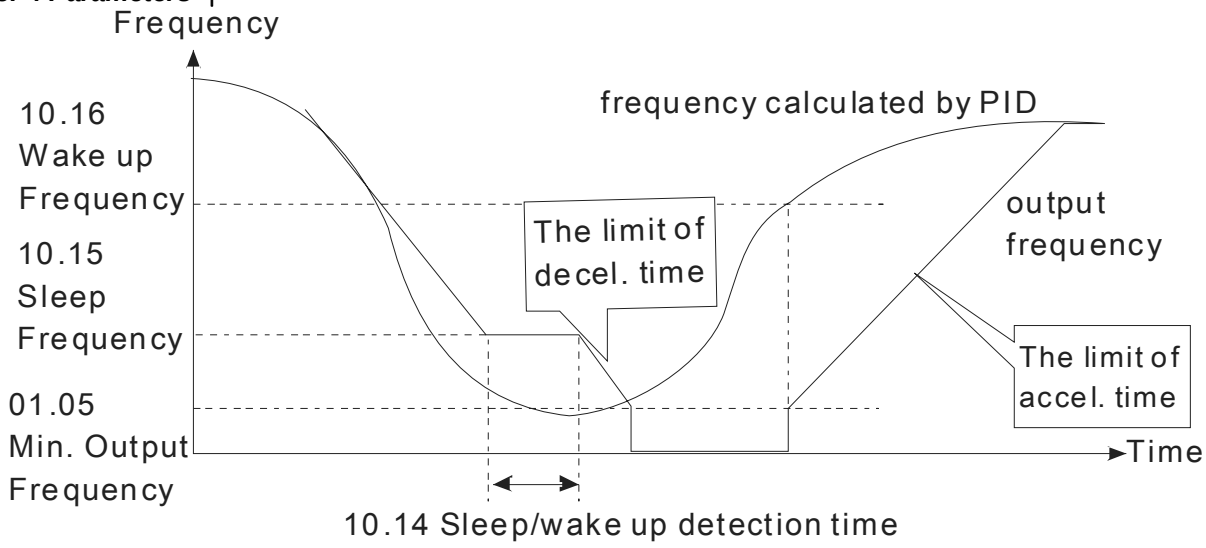


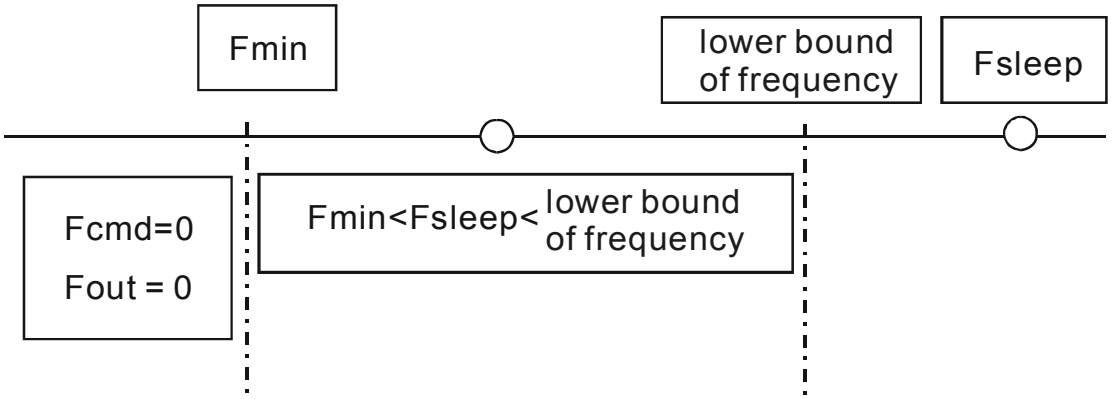


When Pr. 01.05min. output frequency ≦ PID frequency (H) ≦ Pr.01.08 lower bound of frequency and sleep function is enabled (output frequency (H) < Pr.10.15 sleep frequency and time > Pr.10.14 detection time), frequency will be 0 (in sleep mode). If sleep function is disabled, output frequency(H) = Pr.01.08 lower bound frequency.

**NOTE**

The common adjustments of PID control are shown as follows:

Example 1: how to have stable control as soon as possible?

Please shorten Pr.10.03 (Integral Time (I)) setting and increase Pr,10.04(Differential Control (D)) setting.

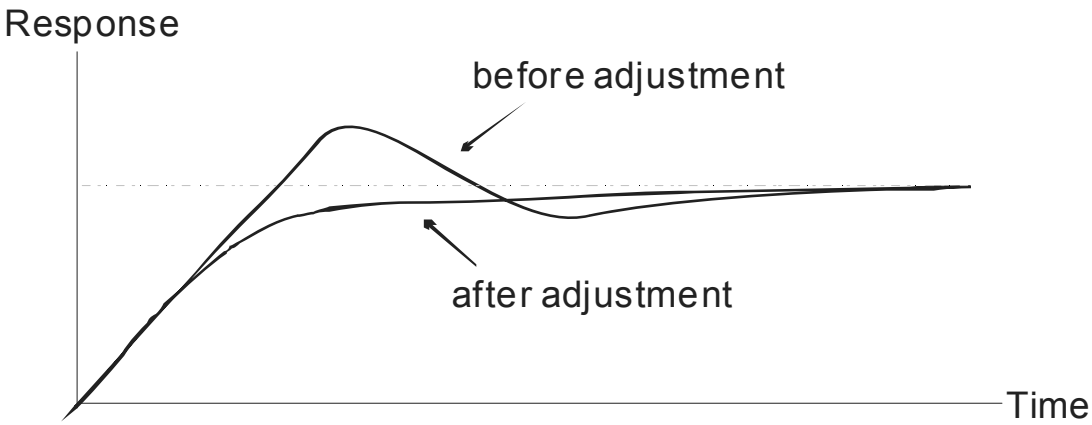

Example 2: How to suppress the oscillation of the wave with long cycle?

If it is oscillation when the wave cycle is longer than integral time, it needs to increase Pr.10.03 setting to suppress the oscillation.

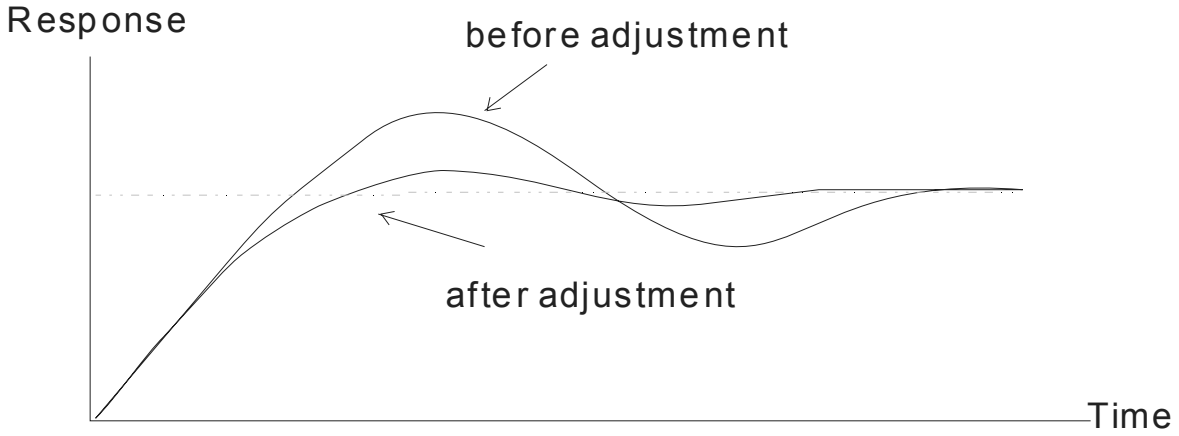


Example 3: How to suppress the oscillation of the wave with short cycle?

When the cycle of oscillation is short and almost equal Differential time setting, it needs to shorten the differential time setting to suppress the oscillation. If Differential time(I) = 0.0, it can not suppress the oscillation. Please reduce Pr.10.02 setting or increase Pr.10.06 setting.

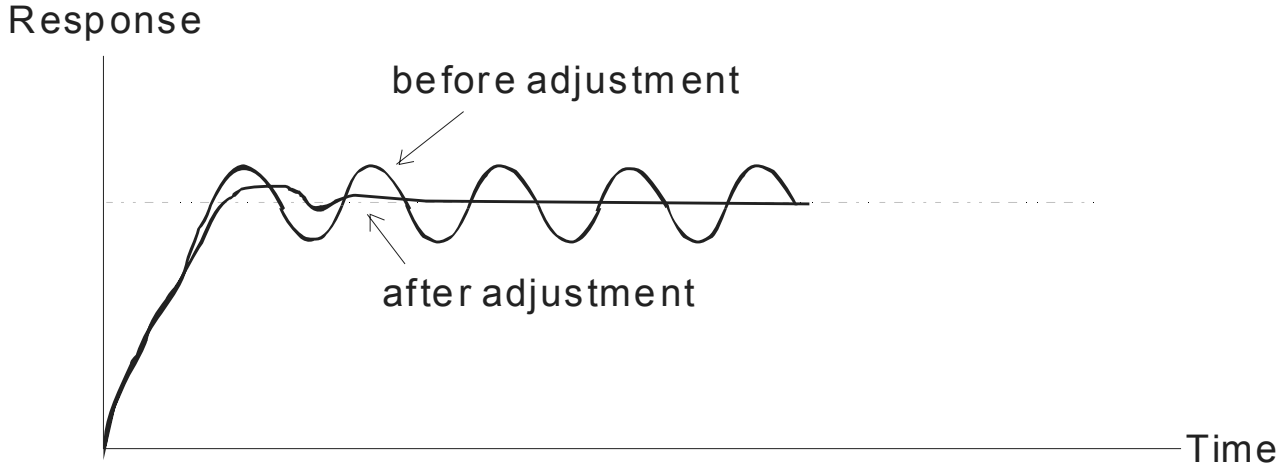

# Group 11: Multi-function Input/Output Parameters for Extension Card

| | |
|---|---|
| **11.00** | Multi-function Output Terminal MO2/RA2 |
| **11.01** | Multi-function Output Terminal MO3/RA3 |
| **11.02** | Multi-function Output Terminal MO4/RA4 |
| **11.03** | Multi-function Output Terminal MO5/RA5 |
| **11.04** | Multi-function Output Terminal MO6/RA6 |
| **11.05** | Multi-function Output Terminal MO7/RA7 |
| Settings | 0 to 24 Factory Setting: 0 |

- Please make sure that the extension card is installed on the AC motor drive correctly, the extension card will be detected automatically thus the Pr. Group 11 will be displayed, and you can set the parameters. If there is no extension card installation, the parameters only can display and set Pr. Group 0 ~ Group 10. See Appendix B for details.
- Please refer to Pr.03.01 function table for Multi-function output terminal function settings.
- Please set the parameters according to the terminal name on the extension card.

| | |
|---|---|
| **11.06** | Multi-function Input Terminal (MI7) |
| **11.07** | Multi-function Input Terminal (MI8) |
| **11.08** | Multi-function Input Terminal (MI9) |
| **11.09** | Multi-function Input Terminal (MI10) |
| **11.10** | Multi-function Input Terminal (MI11) |
| **11.11** | Multi-function Input Terminal (MI12) |
| Settings | 0 to 28 Factory Setting: 0 |

- Refer to the table below Pr.04.08 for setting the multifunction input terminals.
- Set the corresponding parameter according to the terminal labeled on the extension card.

# Group 12: Analog Input/Output Parameters for Extension Card

Make sure that the extension card is installed on the AC motor drive correctly before using group 12 parameters. See Appendix B for details.

| **12.00** | AI1 Function Selection | |
|---|---|---|
| | | Factory Setting: 0 |
| Settings | 0 | Disabled |
| | 1 | Source of the 1st frequency |
| | 2 | Source of the 2nd frequency |
| | 3 | PID Set Point (PID enable) |
| | 4 | Positive PID feedback |
| | 5 | Negative PID feedback |

| **12.01** | AI1 Analog Signal Mode | |
|---|---|---|
| | | Factory Setting: 1 |
| Settings | 0 | ACI2 analog current (0.0 ~ 20.0mA) |
| | 1 | AVI3 analog voltage (0.0 ~ 10.0V) |

📖 Besides parameters settings, the voltage/current mode should be used with the switch.

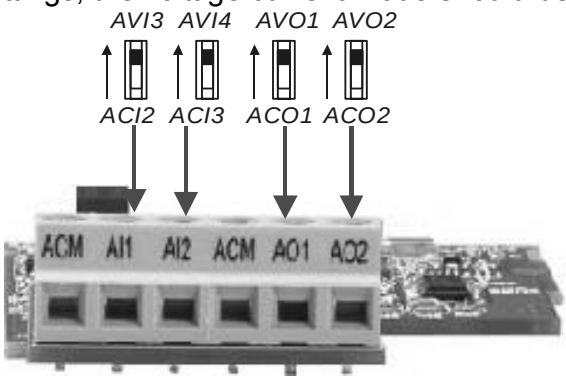


| **12.02** | Min. AVI3 Input Voltage | Unit: V |
|---|---|---|
| Settings | 0.0 to 10.0V | Factory Setting: 0.0 |

| **12.03** | Min. AVI3 Scale Percentage | Unit: % |
|---|---|---|
| Settings | 0.0 to 100.0% | Factory Setting: 0.0 |

| **12.04** | Max. AVI3 Input Voltage | Unit: V |
|---|---|---|
| Settings | 0.0 to 10.0V | Factory Setting: 10.0 |

| 12.05 | Max. AVI3 Scale Percentage | Unit: % |
|---|---|---|
| Settings | 0.0 to 100.0% | Factory Setting: 100.0 |

| 12.06 | Min. ACI2 Input Current | Unit: mA |
|---|---|---|
| Settings | 0.0 to 20.0mA | Factory Setting: 4.0 |

| 12.07 | Min. ACI2 Scale Percentage | Unit: % |
|---|---|---|
| Settings | 0.0 to 100.0% | Factory Setting: 0.0 |

| 12.08 | Max. ACI2 Input Current | Unit: mA |
|---|---|---|
| Settings | 0.0 to 20.0mA | Factory Setting: 20.0 |

| 12.09 | Max. ACI2 Scale Percentage | Unit: % |
|---|---|---|
| Settings | 0.0 to 100.0% | Factory Setting: 100.0 |

**12.10** AI2 Function Selection

Factory Setting: 0

| Settings | | |
|---|---|---|
| | 0 | Disabled |
| | 1 | Source of the 1st frequency |
| | 2 | Source of the 2nd frequency |
| | 3 | PID Set Point (PID enable) |
| | 4 | Positive PID feedback |
| | 5 | Negative PID feedback |

**12.11** AI2 Analog Signal Mode

Factory Setting: 1

| Settings | | |
|---|---|---|
| | 0 | ACI3 analog current (0.0 ~ 20.0mA) |
| | 1 | AVI4 analog voltage (0.0 ~ 10.0V) |

📖 Besides parameters settings, the voltage/current mode should be used with the switch.

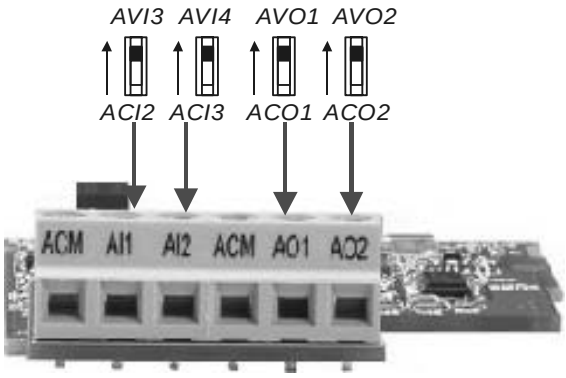


| | | |
|---|---|---|
| **12.12** | Min. AVI4 Input Voltage | Unit: V |
| | Settings 0.0 to 10.0V | Factory Setting: 0.0 |

| | | |
|---|---|---|
| **12.13** | Min. AVI4 Scale Percentage | Unit: % |
| | Settings 0.0 to 100.0% | Factory Setting: 0.0 |

| | | |
|---|---|---|
| **12.14** | Max. AVI4 Input Voltage | Unit: V |
| | Settings 0.0 to 10.0V | Factory Setting: 10.0 |

| | | |
|---|---|---|
| **12.15** | Max. AVI4 Scale Percentage | Unit: % |
| | Settings 0.0 to 100.0% | Factory Setting: 100.0 |

| | | |
|---|---|---|
| **12.16** | Min. ACI3 Input Current | Unit: mA |
| | Settings 0.0 to 20.0mA | Factory Setting: 4.0 |

| | | |
|---|---|---|
| **12.17** | Min. ACI3 Scale Percentage | Unit: % |
| | Settings 0.0 to 100.0% | Factory Setting: 0.0 |

| | | |
|---|---|---|
| **12.18** | Max. ACI3 Input Current | Unit: mA |
| | Settings 0.0 to 20.0mA | Factory Setting: 20.0 |

| 12.19 | Max. ACI3 Scale Percentage | Unit: % |
|---|---|---|
| Settings | 0.0 to 100.0% | Factory Setting: 100.0 |

| 12.20 | AO1 Terminal Analog Signal Mode | |
|---|---|---|
| | | Factory Setting: 0 |
| Settings | 0 | AVO1 |
| | 1 | ACO1 (analog current 0.0 to 20.0mA) |
| | 2 | ACO1 (analog current 4.0 to 20.0mA) |

Besides parameter setting, the voltage/current mode should be used with the switch.

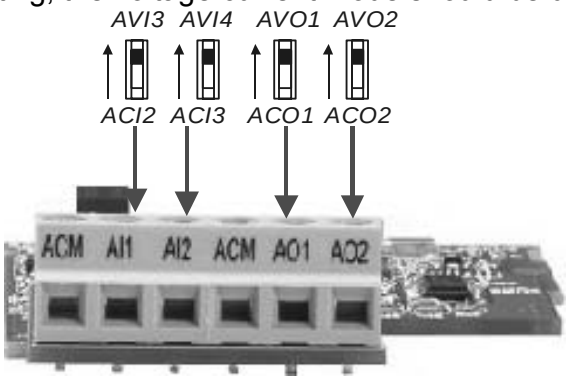


| 12.21 | AO1 Analog Output Signal | |
|---|---|---|
| | | Factory Setting: 0 |
| Settings | 0 | Analog Frequency |
| | 1 | Analog Current (0 to 250% rated current) |

This parameter is used to choose analog frequency (0-+10Vdc) or analog current (4-20mA) to correspond to the AC motor drive's output frequency or current.

| 12.22 | AO1 Analog Output Gain | Unit: % |
|---|---|---|
| Settings | 1 to 200% | Factory Setting: 100 |

This parameter is used to set the analog output voltage range.

When Pr.12.21 is set to 0, analog output voltage corresponds to the AC motor drive's output frequency. When Pr.12.22 is set to 100, the max. output frequency (Pr.01.00) setting corresponds to the AFM output (+10VDC or 20mA)

When Pr.12.21 is set to 1, analog output voltage corresponds to the AC motor drive's output current. When Pr.12.22 is set to 100, the 2.5 X rated current corresponds to the AFM output (+10VDC or 20mA)

**NOTE**

If the scale of the voltmeter is less than 10V, refer to following formula to set Pr.12.22:

Pr.12.22 = [(full scale voltage)/10]*100%.

Example: When using voltmeter with full scale (5V), Pr.12.22 should be set to 5/10*100%=50%. If Pr.12.21 is set to 0, the output voltage will correspond to the max. output frequency.

| **12.23** | AO2Terminal Analog Signal Mode | |
|---|---|---|
| | | Factory Setting: 0 |
| Settings | 0 | AVO2 |
| | 1 | ACO2 (analog current 0.0 to 20.0mA) |
| | 2 | ACO2 (analog current 4.0 to 20.0mA) |

📖 Besides parameter setting, the voltage/current mode should be used with the switch.

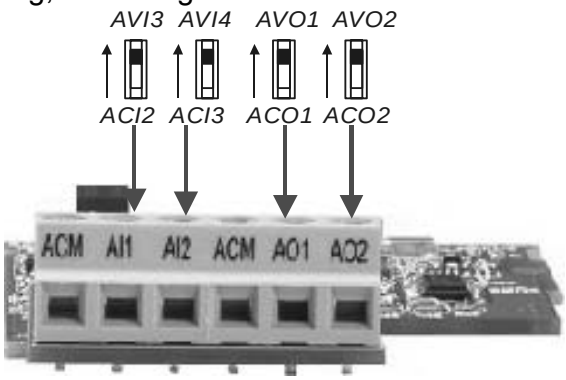


| **12.24** | AO2 Analog Output Signal | |
|---|---|---|
| | | Factory Setting: 0 |
| Settings | 0 | Analog Frequency |
| | 1 | Analog Current (0 to 250% rated current) |

| **12.25** | AO2 Analog Output Gain | Unit: % |
|---|---|---|
| Settings | 1 to 200% | Factory Setting: 100 |

📖 Setting method for the AO2 is the same as the AO1.

| **12.26** | AUI Analog Input Selection | |
|---|---|---|
| | | Factory Setting: 0 |
| Settings | 0 | No function |
| | 1 | Source of the 1st frequency |
| | 2 | Source of the 2nd frequency |

| **12.27** | ⚡AUI Analog Input Bias | Unit: % |
|---|---|---|
| Settings | 0.00 to 200.00% | Factory Setting: 0.00 |

| **12.28** | AUI Bias Polarity | |
|---|---|---|
| | | Factory Setting: 0 |
| Settings | 0 | Positive bias |
| | 1 | Negative bias |

| **12.29** | ✓AUI Analog Gain | Unit: % |
|---|---|---|
| Settings | 1 to 200% | Factory Setting: 100 |

| **12.30** | AUI Negative Bias, Reverse Motion Enable/Disable | |
|---|---|---|
| | | Factory Setting: 0 |
| Settings | 0 | No AUI Negative Bias Command |
| | 1 | Negative Bias: REV Motion Enabled |
| | 2 | Negative Bias: REV Motion Disabled |

| **12.31** | AUI Analog Input Delay | Unit: 2ms |
|---|---|---|
| Settings | 0 to 9999 | Factory Setting: 50 |

📖 In a noisy environment, it is advantageous to use negative bias to provide a noise margin. It is recommended NOT to use less than 1V to set the operation frequency.

📖 Pr.12-26 to Pr.12-31 can be used to set the frequency command by adjusting analog input voltage -10V to +10V. Refer to Pr.04-00 to 04-03 for details.

# Group 13: PG function Parameters for Extension Card

Pulse generator card (PG card) is mainly applied in the detection components of speed control or position control. It usually makes a closed-loop speed control system with encoder. The AC motor drive is used with encoder and PG card to have a complete speed control and position detection system.
Please make sure that the extension card is installed on the AC motor drive correctly before using group 12 parameters. See Appendix B for details.

| **13.00** | PG Input |
|---|---|

Factory Setting: 0

| | | |
|---|---|---|
| Settings | 0 | Disable PG |
| | 1 | Single phase |
| | 2 | Forward/Counterclockwise rotation |
| | 3 | Reverse/Clockwise rotation |

- There are two outputs, 1-phase and 2-phase output, for the encoder output. For the 1-phase output, the encoder output is a group of pulse signal. For the 2-phase output, the encoder can output A and B pulse signals with $90^{o}$ phase difference. The encoder is defined by the timing of A and B pulses as the following figure. It can not only measure the speed but distinguish motor rotation direction by A and B pulse signals.
- PG card receives A and B pulses from encoder output and sends this feedback signal to the AC motor drive for speed or position control.
- Setting 0: disable PG function.
- Setting 1: for speed/position control but can’t distinguish motor rotation direction.
- Setting 2: both for speed control and distinguish motor rotation direction. A phase leads B phase as shown in the following diagram and motor is forward running.
- Setting 3: both for speed control and distinguish motor rotation direction. B phase leads A phase as shown in the following diagram and motor is reverse running.
- Related parameter: Pr.13.01(PG Pulse Range)

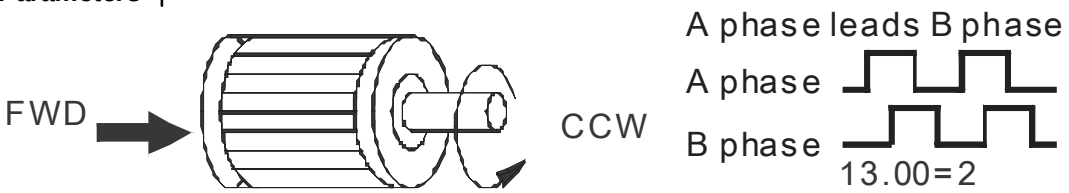


When receiving a forward command, motor will rotate in counterclockwise direction (see from output side).

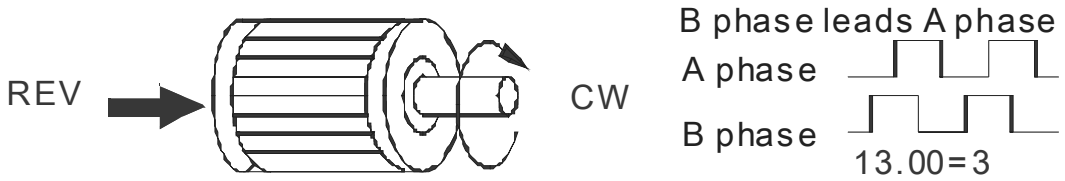


When receiving a reverse command, motor will rotate in clockwise direction (see from output side).

When encoder rotates in clockwise direction (see from input side). At this moment, A phase leads B phase.

| 13.01 | PG Pulse Range | |
|---|---|---|
| | Settings 1 to 20000 | Factory Setting: 600 |

- A Pulse Generator (PG) is used as a sensor that provides a feedback signal of the motor speed. This parameter defines the number of pulses for each cycle of the PG control.
- This parameter setting is the resolution of encoder. With the higher resolution, the speed control will be more precise.

| 13.02 | Motor Pole Number (Motor 0) | Unit: 1 |
|---|---|---|
| | Settings 2 to 10 | Factory Setting: 4 |

- The pole number should be even (can't be odd).

| 13.03 | ⚡Proportional Gain (P) | Unit: 0.01 |
|---|---|---|
| | Settings 0.0 to 10.0 | Factory Setting: 1.0 |

- This parameter is used to set the gain (P) when using PG for the closed-loop speed control.
- The proportional gain is mainly used to eliminate the error. The large proportional gain(P) will get the faster response to decrease the error. Too large proportional gain will cause large overshoot and oscillation and decrease the stable.
- This parameter can be used to set the proportional gain (P) to decide the response speed. With large proportional gain, it will get faster response. Too large proportional gain may cause system oscillation. With small proportional gain, it will get slower response.

| **13.04** | ⁄ Integral Gain ( I ) | Unit: 0.01 |
|---|---|---|
| Settings | 0.00 to 100.00 sec | Factory Setting: 1.00 |
| | 0.00 Disable | |

- The integral controller is used to eliminate the error during stable system. The integral control doesn't stop working until error is 0. The integral is acted by the integral time. The smaller integral time is set, the stronger integral action will be. It is helpful to reduce overshoot and oscillation to make a stable system. At this moment, the decreasing error will be slow. The integral control is often used with other two controls to become PI controller or PID controller.
- This parameter is used to set the integral time of I controller. When the integral time is long, it will have small gain of I controller, the slower response and bad external control. When the integral time is short, it will have large gain of I controller, the faster response and rapid external control.
- When the integral time is too small, it may cause system oscillation.
- When it is set to 0.0, the integral function is disabled.

| **13.05** | ⁄ Speed Control Output Frequency Limit | Unit: Hz |
|---|---|---|
| Settings | 0.00 to 100.00Hz | Factory Setting: 10.00 |

- This parameter is used to limit the max. output frequency.
- From the following PG speed diagram, output frequency (H) = frequency command (F) + speed detection value via PG feedback. With the speed change of motor load, the speed change will be sent to drive via PG card to change the output frequency. So this parameter can be used to decrease the speed change of motor load.

| **13.06** | ⁄ Speed Feedback Display Filter | Unit: 2ms |
|---|---|---|
| Settings | 0 to 9999 (*2ms) | Factory Setting: 500 |

- When Pr.0.04 is set to 14, its display will be updated regularly. This update time is set by Pr.13.06.
- With the large setting in Pr.13.06, it can slow the response speed to prevent the blinking of digital number on the digital keypad. Too large setting may cause the delay of RPM value via PG card.
- Related parameter: Pr.00.04(Content of Multi-function Display)

| **13.09** | ⁄ Speed Feedback Filter | Unit: 2ms |
|---|---|---|
| Settings | 0 to 9999 (*2ms) | Factory Setting: 16 |

- This parameter is the filter time from the speed feedback to the PG card. Too large setting may cause slow feedback response.

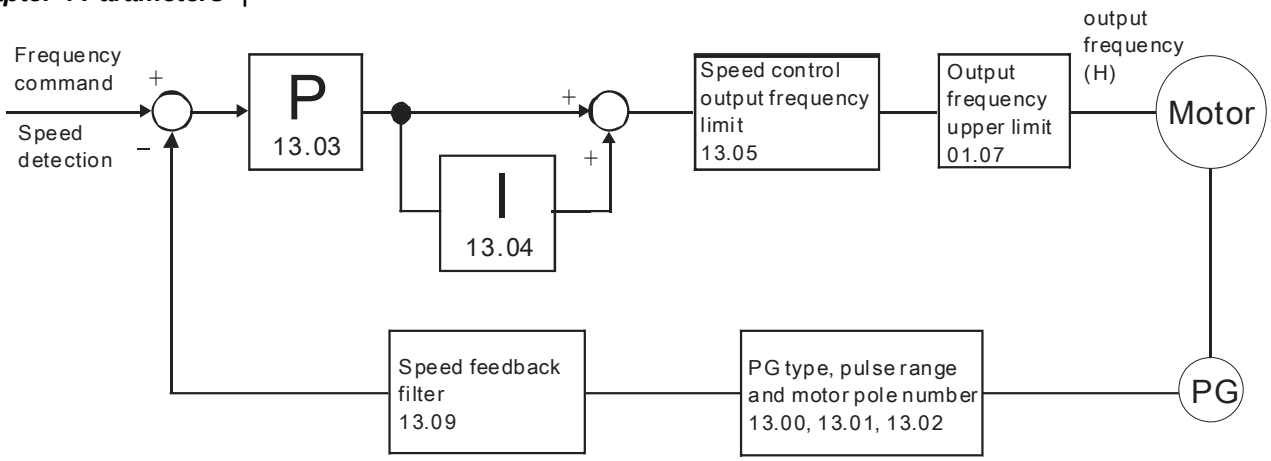


PG feedback speed control

| 13.07 | ✓Time for Feedback Signal Fault | Unit: second |
|---|---|---|

Settings 0.1 to 10.0 sec Factory Setting: 1.0

0.0 Disabled

- This parameter defines the time during which the PID feedback must be abnormal before a warning (see Pr.13.08) is given. It also can be modified according to the system feedback signal time.
- If this parameter is set to 0.0, the system would not detect any abnormality signal.
- Related parameter: Pr.13.08(Treatment of the Feedback Signal Fault)

| 13.08 | ✓Treatment of the Feedback Signal Fault |
|---|---|

Factory Setting: 1

| Settings | 0 | Warn and RAMP to stop |
|---|---|---|
| | 1 | Warn and COAST to stop |
| | 2 | Warn and keep operating |

- AC motor drive action when the feedback signals (analog PID feedback or PG (encoder) feedback) are abnormal.
- Setting Pr.13.08 to 0: When the feedback signal fault occurs, it will display “PGEr” on the digital keypad and the stop to 0Hz by Pr.01.10/Pr.01.12 setting.
- Setting Pr.13.08 to 1: When the feedback signal fault occurs, it will display “PGEr” on the digital keypad and the motor will free run to stop.
- Setting Pr.13.08 to 2: When the feedback signal fault occurs, it will display “PGEr” on the digital keypad and the motor will keep running.
- It needs to press “RESET” to clear the warning message “PGEr” displayed on the keypad.

**NOTE**

The digital keypad is optional. Please refer to Appendix B for details. When using without this optional keypad, the FAULT LED will be ON once there is error messages or warning messages from the external terminals.

| **13.10** | Source of the High-speed Counter (NOT for VFD*E*C models) |
|---|---|

Factory Display: 0 (Read only)

| | | |
|---|---|---|
| Settings | 0 | PG card |
| | 1 | PLC |

📖 This parameter reads the high-speed counter of the drive to use on PG card or PLC.

## 4.4 Different Parameters for VFD*E*C Models

***The content of this instruction sheet may be revised without prior notice. Please consult our distributors or download the most updated version at http://www.delta.com.tw/industrialautomation***
***Software version for VFD*E*C is power board: V1.00 and control board: V2.00.***
✓: The parameter can be set during operation.

# Group 0 User Parameters

| Parameter | Explanation | Settings | Factory Setting | Customer |
|---|---|---|---|---|
| 00.02 | Parameter Reset | 0: Parameter can be read/written<br>1: All parameters are read only<br>6: Clear PLC program (NOT for VFD*E*C models)<br>9: All parameters are reset to factory settings (50Hz, 230V/400V or 220V/380V depends on Pr.00.12)<br>10: All parameters are reset to factory settings (60Hz, 220V/440V) | 0 | |
| ✓00.03 | Start-up Display Selection | 0: Display the frequency command value (Fxxx)<br>1: Display the actual output frequency (Hxxx)<br>2: Display the content of user-defined unit (Uxxx)<br>3: Multifunction display, see Pr.00.04<br>4: FWD/REV command<br>5: PLCx (PLC selections: PLC0/PLC1/PLC2) (NOT for VFD*E*C models) | 0 | |
| ✓00.04 | Content of Multi-function Display | 0: Display the content of user-defined unit (Uxxx)<br>1: Display the counter value (c)<br>2: Display PLC D1043 value (C) (NOT for VFD*E*C models)<br>3: Display DC-BUS voltage (u)<br>4: Display output voltage (E)<br>5: Display PID analog feedback signal value (b) (%) | 0 | |

| Parameter | Explanation | Settings | Factory Setting | Customer |
|---|---|---|---|---|
| | | 6: Output power factor angle (n)<br>7: Display output power (P) | | |
| | | 8: Display the estimated value of torque as it relates to current (t)<br>9: Display AVI (I) (V)<br>10: Display ACI / AVI2 (i) (mA/V)<br>11: Display the temperature of IGBT (h) (°C)<br>12: Display AVI3/ACI2 level (I.)<br>13: Display AVI4/ACI3 level (i.)<br>14: Display PG speed in RPM (G)<br>15: Display motor number (M)<br>16: Display F*Pr.00.05 | | |

# Group 1 Basic Parameters

| Parameter | Explanation | Settings | Factory Setting | Customer |
|---|---|---|---|---|
| ⚡01.09 | Accel Time 1 | 0.1 to 600.0 / 0.01 to 600.0 sec | 10.0 | |
| ⚡01.10 | Decel Time 1 | 0.1 to 600.0 / 0.01 to 600.0 sec | 10.0 | |
| ⚡01.11 | Accel Time 2 | 0.1 to 600.0 / 0.01 to 600.0 sec | 1.0 | |
| ⚡01.12 | Decel Time 2 | 0.1 to 600.0 / 0.01 to 600.0 sec | 1.0 | |

# Group 2 Operation Method Parameters

| Parameter | Explanation | Settings | Factory Setting | Customer |
|---|---|---|---|---|
| ✓02.00 | Source of First Master Frequency Command | 0: Digital keypad UP/DOWN keys or Multi-function Inputs UP/DOWN. Last used frequency saved.<br>1: 0 to +10V from AVI<br>2: 4 to 20mA from ACI or 0 to +10V from AVI2<br>3: RS-485 (RJ-45)/USB communication<br>4: Digital keypad potentiometer<br>5: CANopen communication | 5 | |
| ✓02.01 | Source of First Operation Command | 0: Digital keypad<br>1: External terminals. Keypad STOP/RESET enabled.<br>2: External terminals. Keypad STOP/RESET disabled.<br>3: RS-485 (RJ-45)/USB communication. Keypad STOP/RESET enabled.<br>4: RS-485 (RJ-45)/USB communication. Keypad STOP/RESET disabled.<br>5: CANopen communication. Keypad STOP/RESET disabled. | 5 | |
| ✓02.09 | Source of Second Frequency Command | 0: Digital keypad UP/DOWN keys or Multi-function Inputs UP/DOWN. Last used frequency saved.<br>1: 0 to +10V from AVI<br>2: 4 to 20mA from ACI or 0 to +10V from AVI2<br>3: RS-485 (RJ-45)/USB communication<br>4: Digital keypad potentiometer<br>5: CANopen communication | 0 | |
| 02.16 | Display the Master Freq Command Source | Read Only<br>Bit0=1: by First Freq Source (Pr.02.00)<br>Bit1=1: by Second Freq Source (Pr.02.09)<br>Bit2=1: by Multi-input function<br>Bit3=1: by PLC Freq command (NOT for VFD*E*C models) | ## | |

| Parameter | Explanation | Settings | Factory Setting | Customer |
|---|---|---|---|---|
| 02.17 | Display the Operation Command Source | Read Only<br>Bit0=1: by Digital Keypad<br>Bit1=1: by RS485 communication<br>Bit2=1: by External Terminal 2/3 wire mode<br>Bit3=1: by Multi-input function<br>Bit5=1: by CANopen communication | ## | |

# Group 3 Output Function Parameters

| Parameter | Explanation | Settings | Factory Setting | Customer |
|---|---|---|---|---|
| 03.09 | Reserved | | | |
| 03.10 | Reserved | | | |

# Group 4 Input Function Parameters

| Parameter | Explanation | Settings | Factory Setting | Customer |
|---|---|---|---|---|
| 04.05 | Multi-function Input Terminal (MI3) | 0: No function<br>1: Multi-Step speed command 1<br>2: Multi-Step speed command 2<br>3: Multi-Step speed command 3<br>4: Multi-Step speed command 4<br>5: External reset<br>6: Accel/Decel inhibit<br>7: Accel/Decel time selection command<br>8: Jog Operation<br>9: External base block<br>10: Up: Increment master frequency<br>11: Down: Decrement master frequency<br>12: Counter Trigger Signal<br>13: Counter reset<br>14: E.F. External Fault Input<br>15: PID function disabled<br>16: Output shutoff stop<br>17: Parameter lock enable<br>18: Operation command selection (external terminals)<br>19: Operation command selection(keypad)<br>20: Operation command selection (communication)<br>21: FWD/REV command<br>22: Source of second frequency command<br>23: Quick Stop (Only for VFD*E*C models)<br>24: Download/execute/monitor PLC Program (PLC2) (NOT for VFD*E*C models)<br>25: Simple position function<br>26: OOB (Out of Balance Detection) | 1 | |
| 04.06 | Multi-function Input Terminal (MI4) | | 2 | |
| 04.07 | Multi-function Input Terminal (MI5) | | 3 | |
| 04.08 | Multi-function Input Terminal (MI6) | | 23 | |

| Parameter | Explanation | Settings | Factory Setting | Customer |
|---|---|---|---|---|
| | | 27: Motor selection (bit 0)<br>28: Motor selection (bit 1) | | |
| 04.24 | Reserved | | | |
| 04.25 | Reserved | | | |

# Group 7 Motor Parameters

| Parameter | Explanation | Settings | Factory Setting | Customer |
|---|---|---|---|---|
| 07.08 | Torque Compensation Time Constant | 0.01 ~10.00 Sec | 0.30 | |
| 07.10 | Accumulative Motor Operation Time (Min.) | 00~1439 | 0 | |

# Group 9 Communication Parameters

| Parameter | Explanation | Settings | Factory Setting | Customer |
|---|---|---|---|---|
| 09.12~ 09.19 | Reserved | | | |
| 09.20 | CANopen Communication Address | 0: disable<br>1: 1 to 127 | 1 | |
| 09.21 | CANbus Baud Rate | 0: 1M<br>1: 500K<br>2: 250K<br>3: 125K<br>4: 100K<br>5: 50K | 0 | |
| 09.22 | Gain of CANbus Frequency | 0.00~2.00 | 1.00 | |
| 09.23 | CANbus Warning | bit 0 : CANopen Guarding Time out<br>bit 1 : CANopen Heartbeat Time out<br>bit 2 : CANopen SYNC Time out<br>bit 3 : CANopen SDO Time out<br>bit 4 : CANopen SDO buffer overflow<br>bit 5 : CANbus Off<br>bit 6 : Error protocol of CANopen | Read-only | |
| 09.24 | DS402 Protocol | 0: Disable (By Delta rule)<br>1: Enable (By DS402) | 1 | |
| 09.25 | Detect SYNC signal | 0:Ignore<br>1:Yes | 0 | |
| 09.26 | The operation state of CAN bus | 0: Node reset<br>1: Communication reset<br>2: Boot up<br>3: Pre-Operation<br>4: Operation<br>5: Stop | 0 | |
| 09.27 | The operation state of CANopen | 0: Not Ready For Use State<br>1: Inhibit Start State<br>2: Ready To Switch On State<br>3: Switched On State<br>4: Enable Operation State<br>7: Quick Stop Active State<br>13: Error Reaction Active State<br>14: Error State | 0 | |

# Group 11 Parameters for Extension Card

| Parameter | Explanation | Settings | Factory Setting | Customer |
|---|---|---|---|---|
| 11.06 | Multi-function Input Terminal (MI7) | 0: No function<br>1: Multi-Step speed command 1<br>2: Multi-Step speed command 2 | 0 | |
| 11.07 | Multi-function Input Terminal (MI8) | 3: Multi-Step speed command 3<br>4: Multi-Step speed command 4<br>5: External reset | 0 | |
| 11.08 | Multi-function Input Terminal (MI9) | 6: Accel/Decel inhibit<br>7: Accel/Decel time selection command<br>8: Jog Operation | 0 | |
| 11.09 | Multi-function Input Terminal (MI10) | 9: External base block<br>10: Up: Increment master frequency<br>11: Down: Decrement master frequency | 0 | |
| 11.10 | Multi-function Input Terminal (MI11) | 12: Counter Trigger Signal<br>13: Counter reset<br>14: E.F. External Fault Input<br>15: PID function disabled | 0 | |
| 11.11 | Multi-function Input Terminal (MI12) | 16: Output shutoff stop<br>17: Parameter lock enable<br>18: Operation command selection (external terminals)<br>19: Operation command selection (keypad)<br>20: Operation command selection (communication)<br>21: FWD/REV command<br>22: Source of second frequency command<br>23: Quick Stop (Only for VFD*E*C models) | 0 | |
| | | 24: Download/execute/monitor PLC Program (PLC2) (NOT for VFD*E*C models)<br>25: Simple position function | | |

| Parameter | Explanation | Settings | Factory Setting | Customer |
|---|---|---|---|---|
| | | 26: OOB (Out of Balance Detection)<br>27: Motor selection (bit 0)<br>28: Motor selection (bit 1) | | |

## Group 13: PG function Parameters for Extension Card

| Parameter | Explanation | Settings | Factory Setting | Customer |
|---|---|---|---|---|
| 13.10 | Reserved | | | |

# Appendix A: Specifications

There are 115V, 230V and 460V models in the VFD-E series. For 115V models, it is 1-phase models. For 0.25 to 3HP of the 230V models, there are 1-phase/3-phase models. Refer to following specifications for details.

| Voltage Class | | 115V Class | | |
|---|---|---|---|---|
| Model Number VFD-XXXE | | 002 | 004 | 007 |
| Max. Applicable Motor Output (kW) | | 0.2 | 0.4 | 0.75 |
| Max. Applicable Motor Output (hp) | | 0.25 | 0.5 | 1.0 |
| Output Rating | Rated Output Capacity (kVA) | 0.6 | 1.0 | 1.6 |
| | Rated Output Current (A) | 1.6 | 2.5 | 4.2 |
| | Maximum Output Voltage (V) | 3-Phase Proportional to Twice the Input Voltage | | |
| | Output Frequency (Hz) | 0.1~600 Hz (Japanese version: 0.1 to 599 Hz ) | | |
| | Carrier Frequency (kHz) | 1-15 | | |
| Input Rating | Rated Input Current (A) | Single-phase | | |
| | | 6 | 9 | 18 |
| | Rated Voltage/Frequency | Single phase, 100-120V, 50/60Hz | | |
| | Voltage Tolerance | ± 10%(90~132 V) | | |
| | Frequency Tolerance | ± 5%(47~63 Hz) | | |
| Cooling Method | | Natural Cooling | | Fan Cooling |
| Weight (kg) | | 1.2 | 1.2 | 1.2 |

| Voltage Class | | 230V Class | | | | | | | | | |
|---|---|---|---|---|---|---|---|---|---|---|---|
| Model Number VFD-XXXE | | 002 | 004 | 007 | 015 | 022 | 037 | 055 | 075 | 110 | 150 |
| Max. Applicable Motor Output (kW) | | 0.2 | 0.4 | 0.75 | 1.5 | 2.2 | 3.7 | 5.5 | 7.5 | 11 | 15 |
| Max. Applicable Motor Output (hp) | | 0.25 | 0.5 | 1.0 | 2.0 | 3.0 | 5.0 | 7.5 | 10 | 15 | 20 |
| Output Rating | Rated Output Capacity (kVA) | 0.6 | 1.0 | 1.6 | 2.9 | 4.2 | 6.5 | 9.5 | 12.5 | 17.1 | 25 |
| | Rated Output Current (A) | 1.6 | 2.5 | 4.2 | 7.5 | 11.0 | 17 | 25 | 33 | 45 | 65 |
| | Maximum Output Voltage (V) | 3-Phase Proportional to Input Voltage | | | | | | | | | |
| | Output Frequency (Hz) | 0.1~600 Hz (Japanese version: 0.1 to 599 Hz ) | | | | | | | | | |
| | Carrier Frequency (kHz) | 1-15 | | | | | | | | | |
| Input Rating | Rated Input Current (A) | Single/3-phase | | | | | 3-phase | | | | |
| | | 4.9/1.9 | 6.5/2.7 | 9.5/5.1 | 15.7/9 | 24/15 | 20.6 | 26 | 34 | 48 | 70 |
| | Rated Voltage/Frequency | Single/3-phase 200-240 V, 50/60Hz | | | | | 3-phase 200-240V, 50/60Hz | | | | |
| | Voltage Tolerance | ± 10%(180~264 V) | | | | | | | | | |
| | Frequency Tolerance | ± 5%(47~63 Hz) | | | | | | | | | |
| Cooling Method | | Natural Cooling | | | Fan Cooling | | | | | | |
| Weight (kg) | | 1.1 | 1.1 | 1.1 | 1.9 | 1.9 | 1.9 | 3.5 | 3.5 | 3.57 | 6.6 |

| Voltage Class | | 460V Class | | | | | | | | | | |
|---|---|---|---|---|---|---|---|---|---|---|---|---|
| Model Number VFD-XXXE | | 004 | 007 | 015 | 022 | 037 | 055 | 075 | 110 | 150 | 185 | 220 |
| Max. Applicable Motor Output (kW) | | 0.4 | 0.75 | 1.5 | 2.2 | 3.7 | 5.5 | 7.5 | 11 | 15 | 18.5 | 22 |
| Max. Applicable Motor Output (hp) | | 0.5 | 1.0 | 2.0 | 3.0 | 5.0 | 7.5 | 10 | 15 | 20 | 25 | 30 |
| Output Rating | Rated Output Capacity (kVA) | 1.2 | 2.0 | 3.3 | 4.4 | 6.8 | 9.9 | 13.7 | 18.3 | 24 | 29 | 34 |
| | Rated Output Current (A) | 1.5 | 2.5 | 4.2 | 5.5 | 8.5 | 13 | 18 | 24 | 32 | 38 | 45 |
| | Maximum Output Voltage (V) | 3-Phase Proportional to Input Voltage | | | | | | | | | | |
| | Output Frequency (Hz) | 0.1~600 Hz (Japanese version: 0.1 to 599 Hz ) | | | | | | | | | | |
| | Carrier Frequency (kHz) | 1-15 | | | | | | | | | | |
| Input Rating | Rated Input Current (A) | 3-phase | | | | | | | | | | |
| | | 1.9 | 3.2 | 4.3 | 7.1 | 11.2 | 14 | 19 | 26 | 35 | 41 | 49 |
| | Rated Voltage/Frequency | 3-phase, 380-480V, 50/60Hz | | | | | | | | | | |
| | Voltage Tolerance | ± 10%(342~528V) | | | | | | | | | | |
| | Frequency Tolerance | ± 5%(47~63Hz) | | | | | | | | | | |
| Cooling Method | | Natural Cooling | | Fan Cooling | | | | | | | | |
| Weight (kg) | | 1.2 | 1.2 | 1.2 | 1.9 | 1.9 | 4.2 | 4.2 | 4.2 | 7.47 | 7.47 | 7.47 |

| General Specifications | | | |
|---|---|---|---|
| Control Characteristics | Control System | | SPWM(Sinusoidal Pulse Width Modulation) control (V/f or sensorless vector control) |
| | Frequency Setting Resolution | | 0.01Hz |
| | Output Frequency Resolution | | 0.01Hz |
| | Torque Characteristics | | Including the auto-torque/auto-slip compensation; starting torque can be 150% at 3.0Hz |
| | Overload Endurance | | 150% of rated current for 1 minute |
| | Skip Frequency | | Three zones, setting range 0.1-600Hz (Japanese version: 0.1 to 599 Hz ) |
| | Accel/Decel Time | | 0.1 to 600 seconds (2 Independent settings for Accel/Decel time) |
| | Stall Prevention Level | | Setting 20 to 250% of rated current |
| | DC Brake | | Operation frequency 0.10-600.00Hz (Japanese version: 0.10 to 599.00 Hz ), output 0-100% rated current<br>Start time 0-60 seconds, stop time 0-60 seconds |
| | Regenerated Brake Torque | | Approx. 20% (up to 125% possible with optional brake resistor or externally mounted brake unit, 1-15hp (0.75-11kW) models have brake chopper built-in) |
| | V/f Pattern | | 4-point adjustable V/f pattern |
| | Speed control accuracy | | +- 3% (VF), +-1% (SVC) |
| | Speed control range | | 1:40 (VF and VF with PG), 1:100 (SVC) , 1:200 (SVC with PG) |
| | Resolution | | Analogue input：10bit (0~5V correspond to 0~-1024)<br>Analogue output：10bit (0~-1024 correspond to 0~10V) |
| Operating Characteristics | Frequency Setting | Keypad | Setting by ▲ ▼ |
| | | External Signal | Potentiometer-5kΩ/0.5W, 0 to +10VDC, 4 to 20mA, RS-485 interface; Multi-function Inputs 3 to 9 (15 steps, Jog, up/down) |

| General Specifications | | | |
|---|---|---|---|
| | Operation Setting Signal | Keypad | Set by RUN and STOP |
| | | External Signal | 2 wires/3 wires (MI1, MI2, MI3), JOG operation, RS-485 serial interface (MODBUS), programmable logic controller |
| | Multi-function Input Signal | | Multi-step selection 0 to 15, Jog, accel/decel inhibit, 2 accel/decel switches, counter, external Base Block, ACI/AVI selections, driver reset, UP/DOWN key settings, NPN/PNP input selection |
| | Multi-function Output Indication | | AC drive operating, frequency attained, zero speed, Base Block, fault indication, overheat alarm, emergency stop and status selections of input terminals |
| | Analog Output Signal | | Output frequency/current |
| Alarm Output Contact | | | Contact will be On when drive malfunctions (1 Form C/change-over contact and 1 open collector output) for standard type) |
| Operation Functions | | | Built-in PLC(NOT for CANopen models), AVR, accel/decel S-Curve, over-voltage/over-current stall prevention, 5 fault records, reverse inhibition, momentary power loss restart, DC brake, auto torque/slip compensation, auto tuning, adjustable carrier frequency, output frequency limits, parameter lock/reset, vector control, PID control, external counter, MODBUS communication, abnormal reset, abnormal re-start, power-saving, fan control, sleep/wake frequency, 1st/2nd frequency source selections, 1st/2nd frequency source combination, NPN/PNP selection, parameters for motor 0 to motor 3, DEB and OOB (Out Of Balance Detection)(for washing machine) |
| Protection Functions | | | Over voltage, over current, under voltage, external fault, overload, ground fault, overheating, electronic thermal, IGBT short circuit, PTC, instantly stop and then reboot(up to 20 sec by setting parameter) |
| Display Keypad (optional) | | | 6-key, 7-segment LED with 4-digit, 5 status LEDs, master frequency, output frequency, output current, custom units, parameter values for setup and lock, faults, RUN, STOP, RESET, FWD/REV, PLC |
| Built-in Brake Chopper | | | VFD002E11T/21T/23T, VFD004E11T/21T/23T/43T, VFD007E21T/23T/43T, VFD015E23T/43T, VFD007E11A/11C, VFD015E21A/21C, VFD022E21A/21C/23A/23C/43A/43C, VFD037E23A/23C/43A/43C, VFD055E23A/23C/43A/43C, VFD075E23A/23C/43A/43C, VFD110E23A/23C/43A/43C, VFD150E23A/23C/43A/43C, VFD185E43A/43C, VFD220E43A/43C |
| Built-in EMI Filter | | | For 230V 1-phase and 460V 3-phase models. |
| Environmental Conditions | Enclosure Rating | | IP20 |
| | Pollution Degree | | 2 |
| | Installation Location | | Altitude 1,000 m or lower, keep from corrosive gasses, liquid and dust |
| | Ambient Temperature | | -10°C to 50°C (40°C for side-by-side mounting) Non-Condensing and not frozen |
| | Storage/ Transportation Temperature | | -20 °C to 60 °C |
| | Ambient Humidity | | Below 90% RH (non-condensing) |
| | Vibration | | 10Hz≦f≦57Hz Fix Amplitude:0.075mm<br>57Hz≦f≦150Hz Fix Acceleration: 1G<br>(According to IEC 60068-2-6) |
| Approvals | | | CE c UL us |

## B.1 All Brake Resistors & Brake Units Used in AC Motor Drives

Note: Please only use DELTA resistors and recommended values. Other resistors and values will void Delta's warranty. Please contact your nearest Delta representative for use of special resistors. The brake unit should be at least 10 cm away from AC motor drive to avoid possible interference. Refer to the "Brake unit Module User Manual" for further details.

| 110V Series | | | | | | | | | |
|---|---|---|---|---|---|---|---|---|---|
| Applicable Motor HP [kW] | Ac Drive Part No. | 125% Braking Torque 10%ED* | | | | | Max. Brake Torque** | | |
| | | Full Load Torque KG-M*** | Brake Unit [VFDB] | Resistor or Value spec. for each Ac motor Drive | Braking Resistor series for each Brake Unit **** | total Braking current (A) | Min. resistor value (Ω) | Max.Total Braking current (A) | Peak Power (kW) |
| 0.25 [0.2] | VFD002E11A<br>VFD002E11C<br>VFD002E11P | 0.14 | 20015*1 | 80W 200Ω | BR080W200*1 | 1.9 | 105.6 | 3.6 | 1.4 |
| | VFD002E11T | | | | | | | | |
| 0.5 [0.4] | VFD004E11A<br>VFD004E11C<br>VFD004E11P | 0.27 | 20015*1 | 80W 200Ω | BR080W200*1 | 1.9 | 105.6 | 3.6 | 1.4 |
| | VFD004E11T | | | | | | | | |
| 1 [0.75] | VFD007E11A<br>VFD007E11C<br>VFD007E11P | 0.51 | | 80W 200Ω | BR080W200*1 | 1.9 | 105.6 | 3.6 | 1.4 |

| 230V Series | | | | | | | | | |
|---|---|---|---|---|---|---|---|---|---|
| Applicable Motor HP [kW] | Ac Drive Part No. | 125% Braking Torque 10%ED* | | | | | Max. Brake Torque** | | |
| | | Full Load Torque KG-M*** | Brake Unit [VFDB] | Resistor or Value spec. for each Ac motor Drive | Braking Resistor series for each Brake Unit **** | total Braking current (A) | Min. resistor value (Ω) | Max.Total Braking current (A) | Peak Power (kW) |
| 0.25 [0.2] | VFD002E21A<br>VFD002E21C<br>VFD002E21P<br>VFD002E23A<br>VFD002E23C<br>VFD002E23P | 0.14 | 20015*1 | 80W 200Ω | BR080W200*1 | 1.9 | 105.6 | 3.6 | 1.4 |
| | VFD002E21T<br>VFD002E23T | | | | | | | | |
| 0.5 [0.4] | VFD004E21A<br>VFD004E21C<br>VFD004E21P<br>VFD004E23A<br>VFD004E23C<br>VFD004E23P | 0.27 | 20015*1 | 80W 200Ω | BR080W200*1 | 1.9 | 105.6 | 3.6 | 1.4 |
| | VFD004E21T<br>VFD004E23T | | | | | | | | |
| 1 [0.75] | VFD007E21A<br>VFD007E21C<br>VFD007E21P<br>VFD007E23A<br>VFD007E23C<br>VFD007E23P | 0.51 | 20015*1 | 80W 200Ω | BR080W200*1 | 1.9 | 105.6 | 3.6 | 1.4 |
| | VFD007E21T<br>VFD007E23T | | | | | | | | |
| 2 [1.5] | VFD015E21A<br>VFD015E21C<br>VFD015E21P | 1.02 | | 300W110Ω | BR300W110 | 3.5 | 105.6 | 3.6 | 1.4 |
| | VFD015E23A<br>VFD015E23C<br>VFD015E23P | | 20015*1 | | | | | | |
| 3 [2.2] | VFD022E21A<br>VFD022E21C<br>VFD022E23A<br>VFD022E23C | 1.49 | | 300W110Ω | BR300W110 | 3.5 | 105.6 | 3.6 | 1.4 |
| 5 [3.7] | VFD037E23A<br>VFD037E23C | 2.50 | | 600W50Ω | BR300W025*2 2 series | 7.6 | 47.5 | 8 | 3.0 |

| 230V Series | | | | | | | | | | |
|---|---|---|---|---|---|---|---|---|---|---|
| Applicable Motor HP [kW] | Ac Drive Part No. | 125% Braking Torque 10%ED* | | | | | | Max. Brake Torque** | | |
| | | Full Load Torque KG-M*** | Brake Unit [VFDB] | Resistor or Value spec. for each Ac motor Drive | Braking Resistor series for each Brake Unit **** | | total Braking current (A) | Min. resistor value (Ω) | Max.Total Braking current (A) | Peak Power (kW) |
| 7.5 [5.5] | VFD055E23A VFD055E23C | 3.72 | | 750W33Ω | BR750W033*1 | | 15.2 | 25.3 | 15 | 5.7 |
| 10 [7.5] | VFD075E23A VFD075E23C | 5.08 | | 1000W20Ω | BR1K0W020*1 | | 20.7 | 16.5 | 23 | 8.7 |
| 15 [11] | VFD110E23A VFD110E23C | 7.45 | | 1500W13Ω | BR1K5W013*1 | | 30.3 | 11.5 | 33 | 12.5 |
| 20 [15] | VFD150E23A VFD150E23C | 10.16 | | 2000W10Ω | BR1K0W020*2 | 2 parallel | 41.5 | 7.6 | 50 | 19.0 |

| 460V Series | | | | | | | | | | |
|---|---|---|---|---|---|---|---|---|---|---|
| Applicable Motor HP [kW] | Ac Drive Part No. | 125% Braking Torque 10%ED* | | | | | | Max. Brake Torque** | | |
| | | Full Load Torque KG-M*** | Brake Unit [VFDB] | Resistor or Value spec. for each Ac motor Drive | Braking Resistor series for each Brake Unit **** | | total Braking current (A) | Min. resistor value (Ω) | Max.Total Braking current (A) | Peak Power (kW) |
| 0.5 [0.4] | VFD004E43A VFD004E43C VFD004E43P | 0.27 | 40015*1 | 80W750Ω | BR080W750*1 | | 1.1 | 422.2 | 1.8 | 1.4 |
| | VFD004E43T | | | | | | | | | |
| 1 [0.75] | VFD007E43A VFD007E43C VFD007E43P | 0.51 | 40015*1 | 80W750Ω | BR080W750*1 | | 1.1 | 422.2 | 1.8 | 1.4 |
| | VFD007E43T | | | | | | | 126.7 | 6 | 4.6 |
| 2 [1.5] | VFD015E43A VFD015E43C VFD015E43P | 1.02 | 40037*1 | 200W360Ω | BR200W360 | | 2.2 | 95.0 | 8 | 6.1 |
| | VFD015E43T | | | | | | | 126.7 | 6 | 4.6 |
| 3 [2.2] | VFD022E43A VFD022E43C | 1.49 | | 300W250Ω | BR300W250 | | 3.2 | 84.4 | 9 | 6.8 |
| 5 [3.7] | VFD037E43A VFD037E43C | 2.50 | | 600W140Ω | BR300W070*2 | 2 series | 5.4 | 84.4 | 9 | 6.8 |
| 7.5 [5.5] | VFD055E43A VFD055E43C | 3.72 | | 1000W75Ω | BR1K0W075*1 | | 10.4 | 63.3 | 12 | 9.1 |
| 10 [7.5] | VFD075E43A VFD075E43C | 5.08 | | 1000W75Ω | BR1K0W075*1 | | 10.4 | 42.2 | 18 | 13.7 |
| 15 [11] | VFD110E43A VFD110E43C | 7.45 | | 1500W43Ω | BR1K5W043*1 | | 17.7 | 42.2 | 18 | 13.7 |
| 20 [15] | VFD150E43A VFD150E43C | 10.16 | | 2000W40Ω | BR1K0W020*2 | 2 series | 20.7 | 21.1 | 36 | 27.4 |
| 25 [18.5] | VFD185E43A VFD185E43C | 12.52 | | 2400W30Ω | BR1K2W015*2 | 2 series | 25.5 | 17.7 | 43 | 32.7 |
| 30 [22] | VFD220E43A VFD220E43C | 14.89 | | 3000W26Ω | BR1K5W013*2 | 2 series | 25.5 | 17.7 | 43 | 32.7 |

**NOTE**

* Calculation for 125% brake toque: (kw)*125%*0.8; where 0.8 is motor efficiency. Because there is a resistor limit of power consumption, the longest operation time for 10%ED is 10sec (on: 10sec/ off: 90sec).

** Please refer to the Brake Performance Curve for “Operation Duration & ED” vs. “Braking Current”.

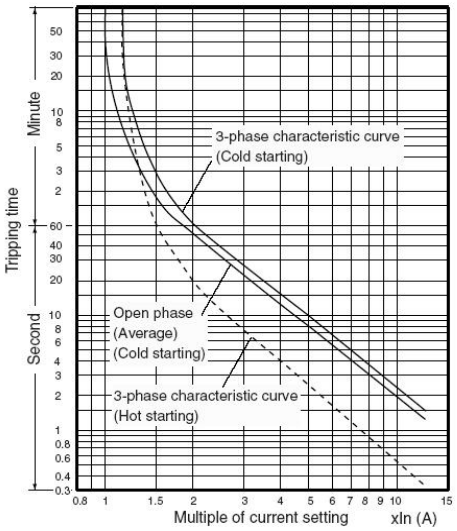


Thermal Relay:

Thermal relay selection is basing on its overload capability. A standard braking capacity for VFD-E is 10%ED (Tripping time=10s). The figure below is an example of 460V, 22kw AC motor drive. It requires the thermal relay to take 260% overload capacity in 10s (Host starting) and the braking current is 30.3A. In this case, user should select a rated 12A thermal relay. The property of each thermal relay may vary among different manufacturer, please carefully read specification.

***The calculation of the barking torque is based on 4-pole (1800 rpm) motor.

****For heat dissipation, a resistor of 400W or lower should be fixed to the frame and maintain the surface temperature below 250℃(400℃); a resistor of 1000W and above should maintain the surface temperature below 600℃.

1. If damage to the drive or other equipment is due to the fact that the brake resistors and the brake modules in use are not provided by Delta, the warranty will be void.
2. Take into consideration the safety of the environment when installing the brake resistors.
3. Definition for Brake Usage ED%
   Explanation: The definition of the barking usage ED(%) is for assurance of enough time for the brake unit and brake resistor to dissipate away heat generated by braking. When the brake resistor heats up, the resistance would increase with temperature, and brake torque would decrease accordingly. Suggested cycle time is one minute

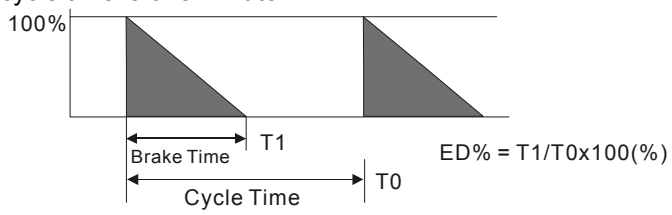


4. Please select the brake unit and/or brake resistor according to the table. "-" means no Delta product. Please use the brake unit according to the Equivalent Resistor Value.
5. For safety reasons, install a thermal overload relay between brake unit and brake resistor. Together with the magnetic contactor (MC) in the mains supply circuit to the drive it offers protection in case of any malfunctioning. The purpose of installing the thermal overload relay is to protect the brake resistor against damage due to frequent brake or in case the brake unit is continuously on due to unusual high input voltage. Under these circumstances the thermal overload relay switches off the power to the drive. Never let the thermal overload relay switch off only the brake resistor as this will cause serious damage to the AC Motor Drive.

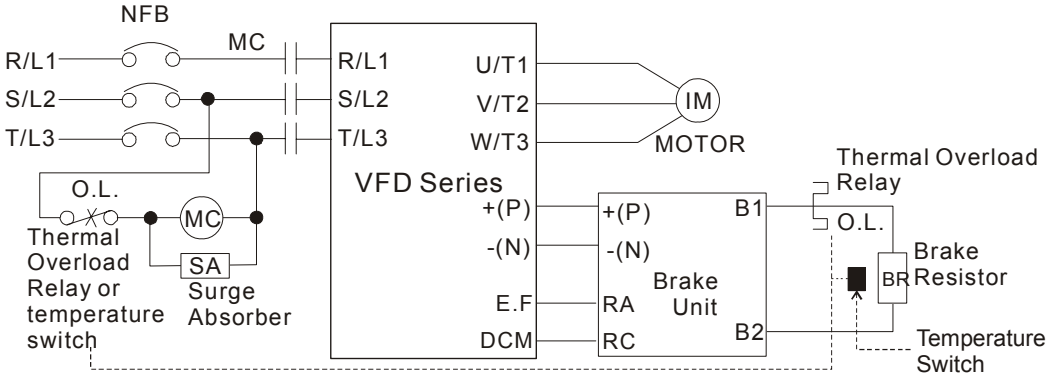


Note1: When using the AC drive with DC reactor, please refer to wiring diagram in the AC drive user manual for the wiring of terminal +(P) of Brake unit.

Note2: **Do NOT** wire terminal -(N) to the neutral point of power system.

## B.1.1 Dimensions and Weights for Brake Resistors

### Brake Resistors

| Model no. | Dimension (mm) | | | |
|---|---|---|---|---|
| | L1±2 | L2±2 | W±0.5 | H±0.5 |
| BR080WXXX | 140 | 125 | 40 | 20 |
| BR1K0WXXX | P1 | | | |
| BR1K1WXXX | | | | |
| BR1K2WXXX | | | | |
| BR1K5WXXX | | | | |
| BR200W360 | 165 | 150 | 60 | 30 |
| BR300WXXX | 215 | 200 | 60 | 30 |
| BR750W033 | P2 | | | |

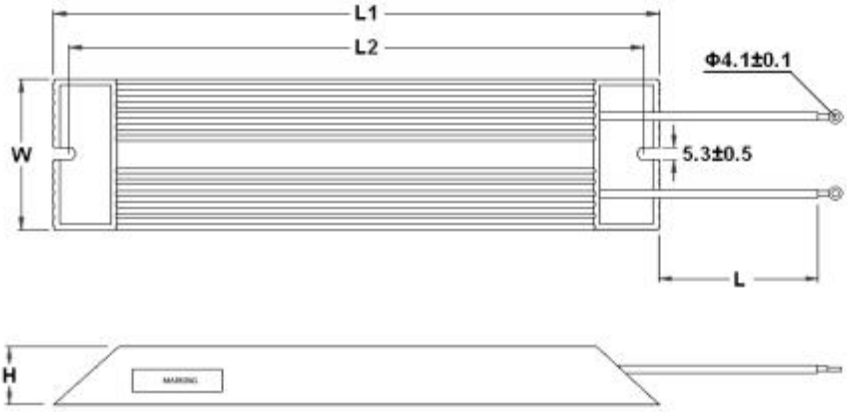


P1

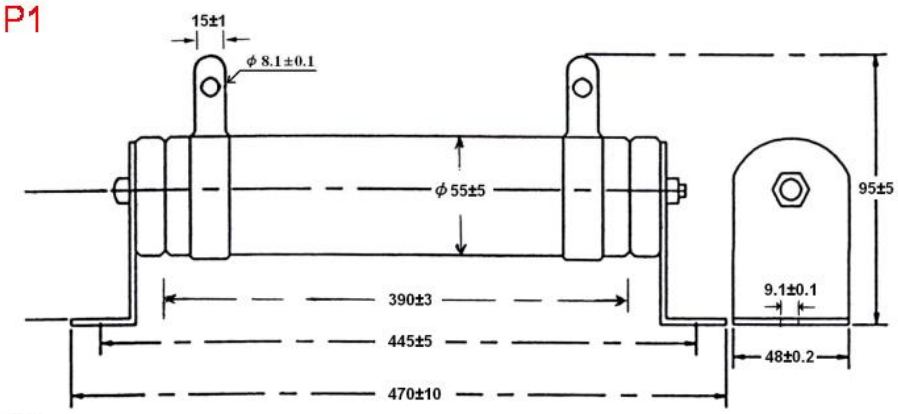


P2

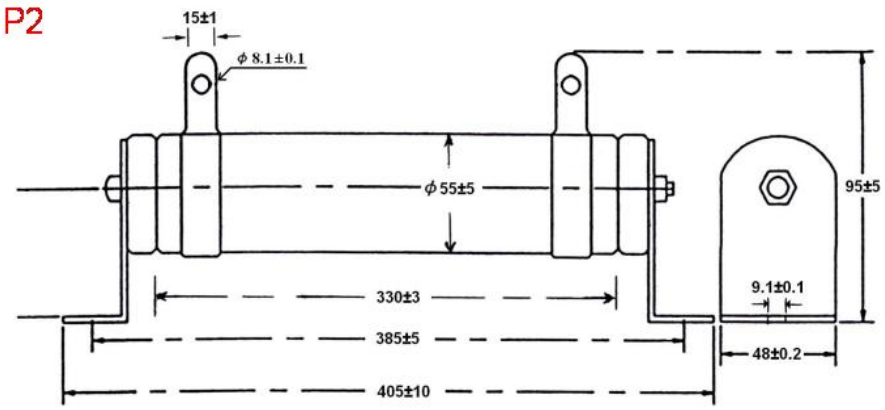

## B.1.2 Specifications for Brake Unit

| Voltage level | | 115/230V Series | | 460V Series | |
|---|---|---|---|---|---|
| Model Name BUE-XXXXX | | 20015 | 20037 | 40015 | 40037 |
| Max. Motor Power (kW) | | 1.5 | 3.7 | 1.5 | 3.7 |
| Output Rating | Max. Peak Discharge Current (A) 10%ED | 3.6 | 16 | 1.8 | 8 |
| | Brake Start-up Voltage (DC) | 328/345/362/380/400±3V | | 656/690/725/760/800±6V | |
| Power | DC Voltage | 200~400VDC | | 400~800VDC | |
| Protection | Heat Sink Overheat | Temperature over +100°C (212°F) | | | |
| | Power Charge Display | Blackout until bus (P~N) voltage is below 50VDC | | | |
| Environment | Installation Location | Indoor (no corrosive gases, metallic dust) | | | |
| | Operating Temperature | -10°C ~ +50°C (14°F to 122°F) | | | |
| | Storage Temperature | -20°C ~ +60°C (-4°F to 140°F) | | | |
| | Humidity | 90% Non-condensing | | | |
| | Vibration | 9.8m/s$^2$ (1G) under 20Hz, 2m/s$^2$ (0.2G) at 20~50Hz | | | |
| Wall-mounted Enclosed Type | | IP20 | | | |

## B.1.3 Dimensions for Brake Unit

(Dimensions are in millimeter [inch])

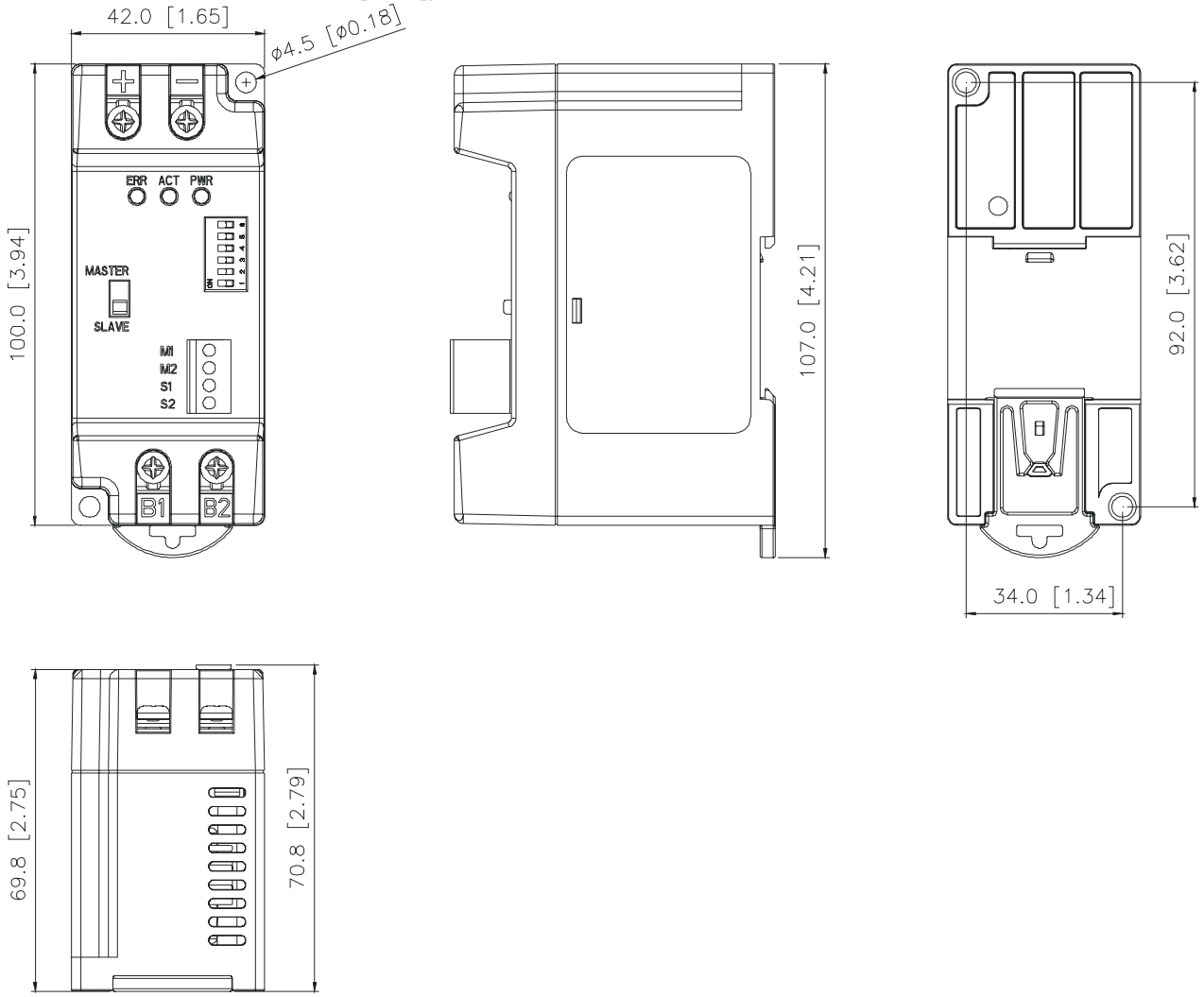

## B.1.4 DIN Rail Installation

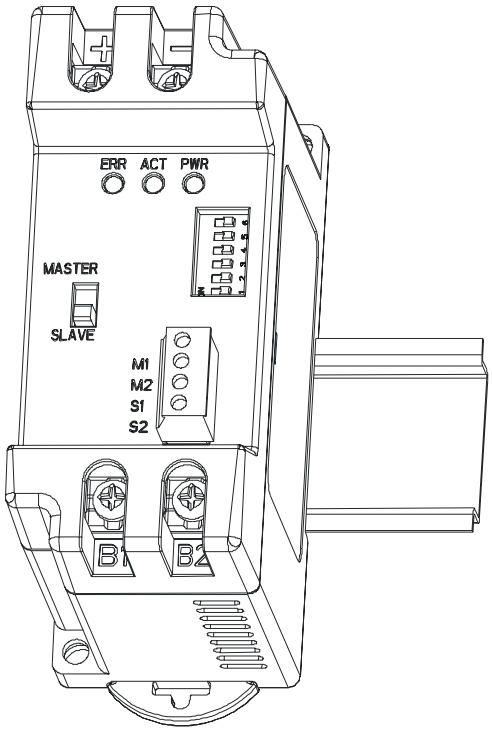


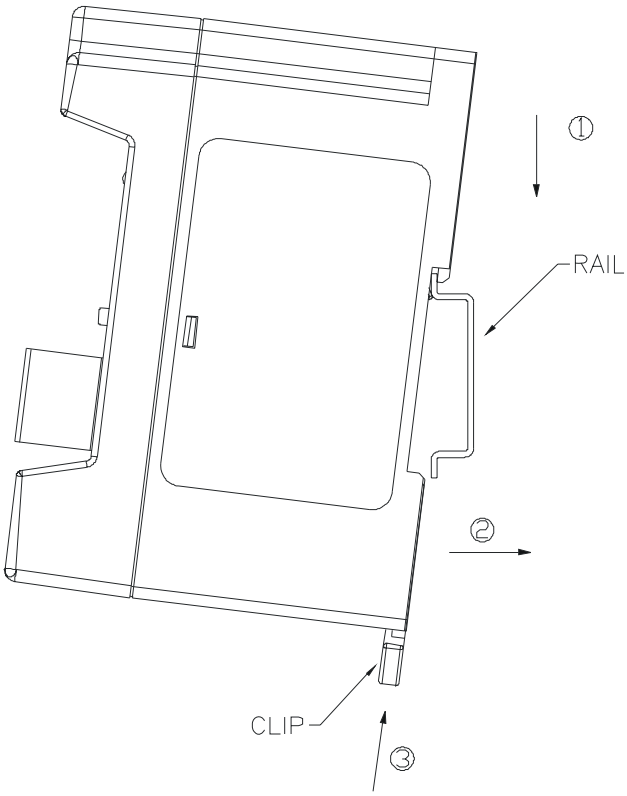

## B.2 No-fuse Circuit Breaker Chart

For 1-phase/3-phase drives, the current rating of the breaker shall be within 2-4 times rated input current.

| Model | Recommended no-fuse breaker (A) | Fuse Specification | |
|---|---|---|---|
| | | Max. I (A) | Min. I (A) |
| VFD002E11A | 1.6~2.6 times of the rated input current | 15 | 15 |
| VFD004E11A | | 20 | 20 |
| VFD007E11A | | 30 | 30 |
| VFD002E21A | | 10 | 10 |
| VFD004E21A | | 15 | 15 |
| VFD007E21A | | 20 | 20 |
| VFD015E21A | | 30 | 30 |
| VFD022E21A | | 50 | 50 |
| VFD002E23A | | 6 | 6 |
| VFD004E23A | | 6 | 10 |
| VFD007E23A | | 10 | 15 |
| VFD015E23A | | 20 | 25 |
| VFD022E23A | | 30 | 35 |
| VFD037E23A | | 40 | 50 |
| VFD055E23A | | 50 | 60 |
| VFD075E23A | | 60 | 80 |
| VFD110E23A | | 100 | 125 |
| VFD150E23A | | 150 | 180 |
| VFD004E43A | | 6 | 6 |
| VFD007E43A | | 6 | 10 |
| VFD015E43A | | 10 | 15 |
| VFD022E43A | | 15 | 20 |
| VFD037E43A | | 20 | 30 |
| VFD055E43A | | 30 | 40 |
| VFD075E43A | | 40 | 50 |
| VFD110E43A | | 50 | 60 |
| VFD150E43A | | 70 | 90 |
| VFD185E43A | | 80 | 100 |
| VFD220E43A | | 100 | 125 |

# B.3 AC Reactor

## B.3.1 AC Input & Output Reactor Recommended Value

115V, 50/60Hz,

| Model | kW [HP] | Rated Amps | Fundamental Amps | 3% impedance (mH) | 5% impedance (mH) | 3% input reactor Delta Part. No. |
|---|---|---|---|---|---|---|
| 002 | 0.2 [0.25] | 1.6 | 2.4 | 0.686 | 1.1439 | N/A |
| 004 | 0.4 [0.5] | 2.5 | 3.75 | 0.439 | 0.7321 | N/A |
| 007 | 0.75 [1] | 4.2 | 6.3 | 0.261 | 0.4358 | N/A |

200~230V, 50/60Hz,

| Model | kW [HP] | Rated Amps | | Fundamental Amps | | 3% impedance (mH) | | 5% impedance (mH) | | 3% input reactor Delta Part. No. | |
|---|---|---|---|---|---|---|---|---|---|---|---|
| | | 3-phase | 1-phase | 3-phase | 1-phase | 3-phase | 1-phase | 3-phase | 1-phase | 3-phase | 1-phase |
| 002 | 0.2 [0.25] | 1.9 | 4.9 | 2.85 | 7.35 | 5.562 | 3.735 | 9.269 | 6.225 | N/A | N/A |
| 004 | 0.4 [0.5] | 2.7 | 6.5 | 4.05 | 10.4 | 3.913 | 2.816 | 6.523 | 4.693 | N/A | N/A |
| 007 | 0.75 [1] | 5.1 | 9.7 | 7.65 | 15.52 | 2.113 | 1.887 | 3.522 | 3.145 | N/A | N/A |
| 015 | 1.5 [2] | 9 | 15.7 | 13.5 | 25.12 | 1.321 | 1.166 | 2.201 | 1.943 | N/A | N/A |
| 022 | 2.2 [3] | 15 | 24 | 22.5 | 38.4 | 0.704 | 0.763 | 1.174 | 1.271 | N/A | N/A |
| 037 | 3.7 [5] | 20.6 | - | 30.9 | - | 0.622 | - | 1.036 | - | N/A | - |
| 055 | 5.5 [7.5] | 26 | - | 39 | - | 0.423 | - | 0.704 | - | N/A | - |
| 075 | 7.5 [10] | 34 | - | 51 | - | 0.320 | - | 0.534 | - | DR033AP320 | - |
| 110 | 11 [15] | 48 | - | 72 | - | 0.216 | - | 0.359 | - | DR049AP215 | - |
| 150 | 15 [20] | 70 | - | 105 | - | 0.163 | - | 0.271 | - | DR065AP162 | - |

380~460V, 50/60Hz,

| Model | kW [HP] | Rated Amps | Fundamental Amps | 3% impedance (mH) | 5% impedance (mH) | 3% input reactor Delta Part. No. |
|---|---|---|---|---|---|---|
| 004 | 0.4 [0.5] | 1.5 | 2.3 | 14.090 | 23.483 | N/A |
| 007 | 0.75 [1] | 2.5 | 3.8 | 7.045 | 11.741 | N/A |
| 015 | 1.5 [2] | 4.2 | 6.3 | 5.284 | 8.806 | N/A |
| 022 | 2.2 [3] | 5.5 | 8.3 | 3.522 | 5.871 | N/A |
| 037 | 3.7 [5] | 8.5 | 12.8 | 2.348 | 3.914 | N/A |
| 055 | 5.5 [7.5] | 13 | 19.5 | 1.761 | 2.935 | N/A |
| 075 | 7.5 [10] | 18 | 27 | 1.174 | 1.957 | DR018A0117 |
| 110 | 11 [15] | 24 | 36 | 0.881 | 1.468 | DR024AP880 |
| 150 | 15 [20] | 32 | 48 | 0.660 | 1.101 | DR032AP660 |
| 185 | 18.5 [25] | 38 | 57 | 0.556 | 0.927 | N/A |
| 220 | 22 [30] | 45 | 67.5 | 0.470 | 0.783 | N/A |

Note:

| AC motor Drive Spec. | No built-in DC reactor | |
|---|---|---|
| Reactors in series specifications | 3% input reactor | 5% input reactor |
| THD | 44% | 35% |
| Warning | 1. THD may have some slight differences because of the different installation conditions (e.g.: cables, motors).<br>2. Use the output AC reactor can protect the motor and extend the cable usage of length.<br>3. The specification of output and input reactors are the same, Delta's part number is unavailable now, please refer to the table above for purchasing. | |

# Applications

Connected in input circuit

| Application 1 | Question |
|---|---|
| When more than one AC motor drive is connected to the same mains power and one of them is ON during operation. | When applying power to one of the AC motor drive, the charge current of the capacitors may cause voltage dip. The AC motor drive may be damaged when over current occurs during operation. |

Correct wiring

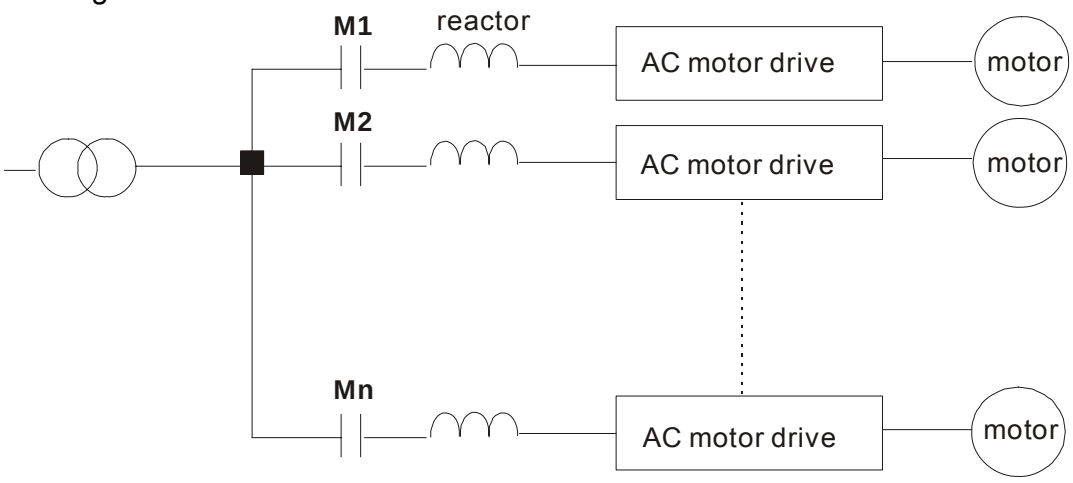


| Application 2 | Question |
|---|---|
| Silicon rectifier and AC motor drive are connected to the same power. | Switching spikes will be generated when the silicon rectifier switches on/off. These spikes may damage the mains circuit. |

Correct wiring

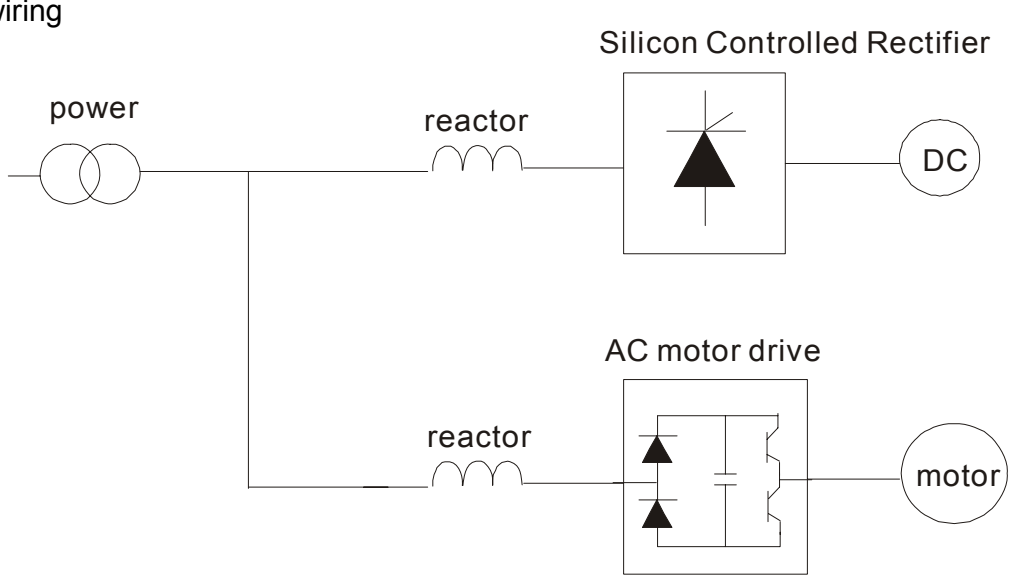

| Application 3 | Question |
| --- | --- |
| Used to improve the input power factor, to reduce harmonics and provide protection from AC line disturbances. (surges, switching spikes, short interruptions, etc.). The AC line reactor should be installed when the power supply capacity is 500kVA or more and exceeds 6 times the inverter capacity, or the mains wiring distance $\leq$10m. | When the mains power capacity is too large, line impedance will be small and the charge current will be too high. This may damage AC motor drive due to higher rectifier temperature. |

Correct wiring

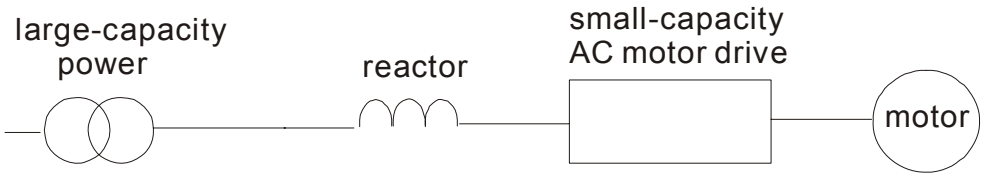

## B.3.2 Zero Phase Reactor (RF220X00A)

Dimensions are in millimeter and (inch)

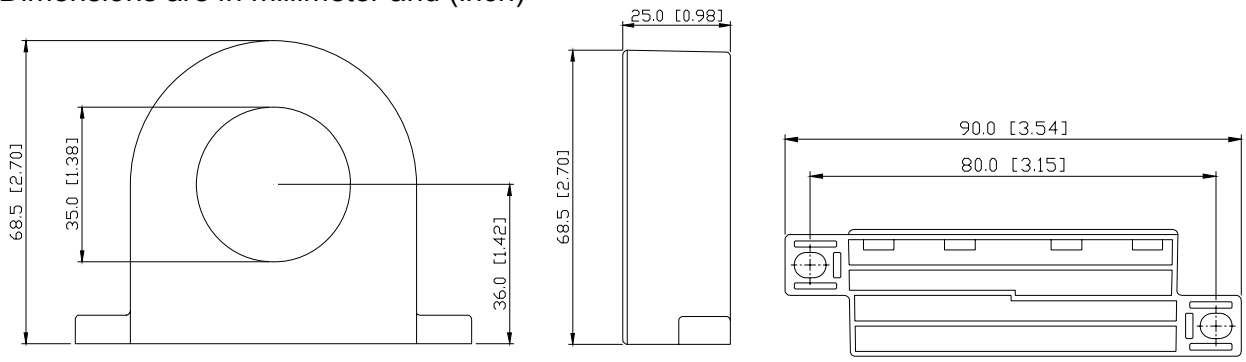


| Cable type (Note) | Recommended Wire Size ($mm^2$) | | | Qty. | Wiring Method |
|---|---|---|---|---|---|
| | AWG | $mm^2$ | Nominal ($mm^2$) | | |
| Single-core | ≤10 | ≤5.3 | ≤5.5 | 1 | Diagram A |
| | ≤2 | ≤33.6 | ≤38 | 4 | Diagram B |
| Three-core | ≤12 | ≤3.3 | ≤3.5 | 1 | Diagram A |
| | ≤1 | ≤42.4 | ≤50 | 4 | Diagram B |

Note: 600V Insulated unshielded Cable.

1. The table above gives approximate wire size for the zero phase reactors but the selection is ultimately governed by the type and diameter of cable fitted i.e. the cable must fit through the center hole of zero phase reactors.
2. Only the phase conductors should pass through, not the earth core or screen.
3. When long motor output cables are used an output zero phase reactor may be required to reduce radiated emissions from the cable.

### Diagram A

Please wind each wire 4 times around the core. The reactor must be put at inverter output as close as possible.

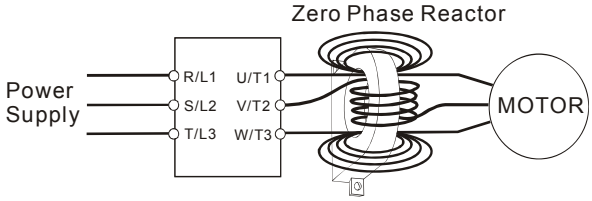


### Diagram B

Please put all wires through 4 cores in series without winding.

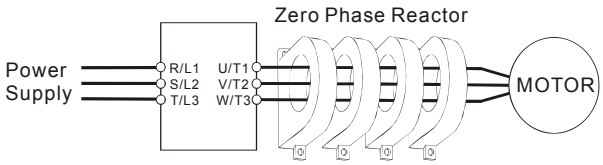

# B.4 Remote Controller RC-01

Dimensions are in millimeter

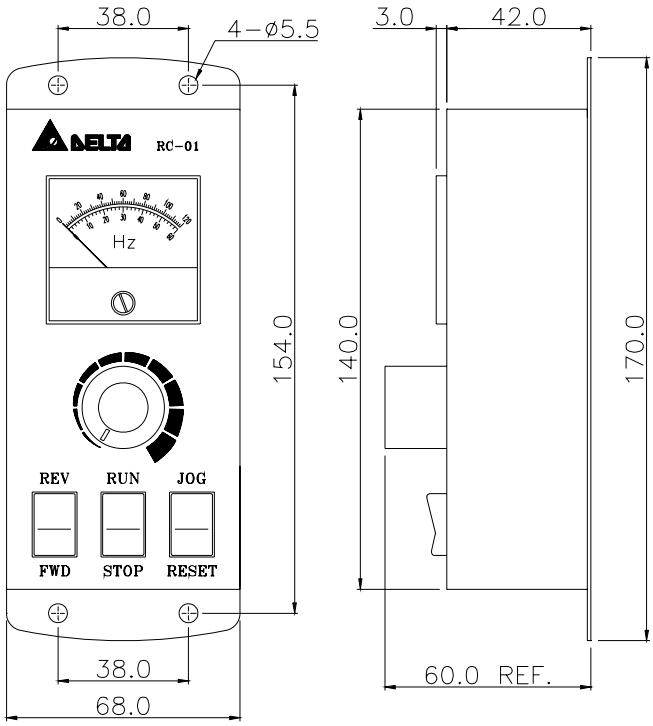


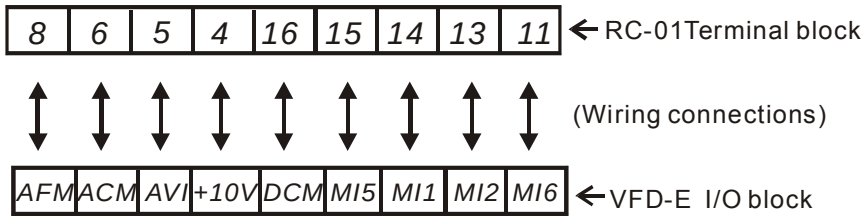


VFD-E Programming:
Pr.02.00 set to 2
Pr.02.01 set to 1 (external controls)
Pr.04.04 set to 1 (setting Run/Stop and Fwd/Rev controls)
Pr.04.07 (MI5) set to 5 (External reset)
Pr.04.08 (MI6) set to 8 (JOG operation)

# B.5 PU06

## B.5.1 Description of the Digital Keypad VFD-PU06

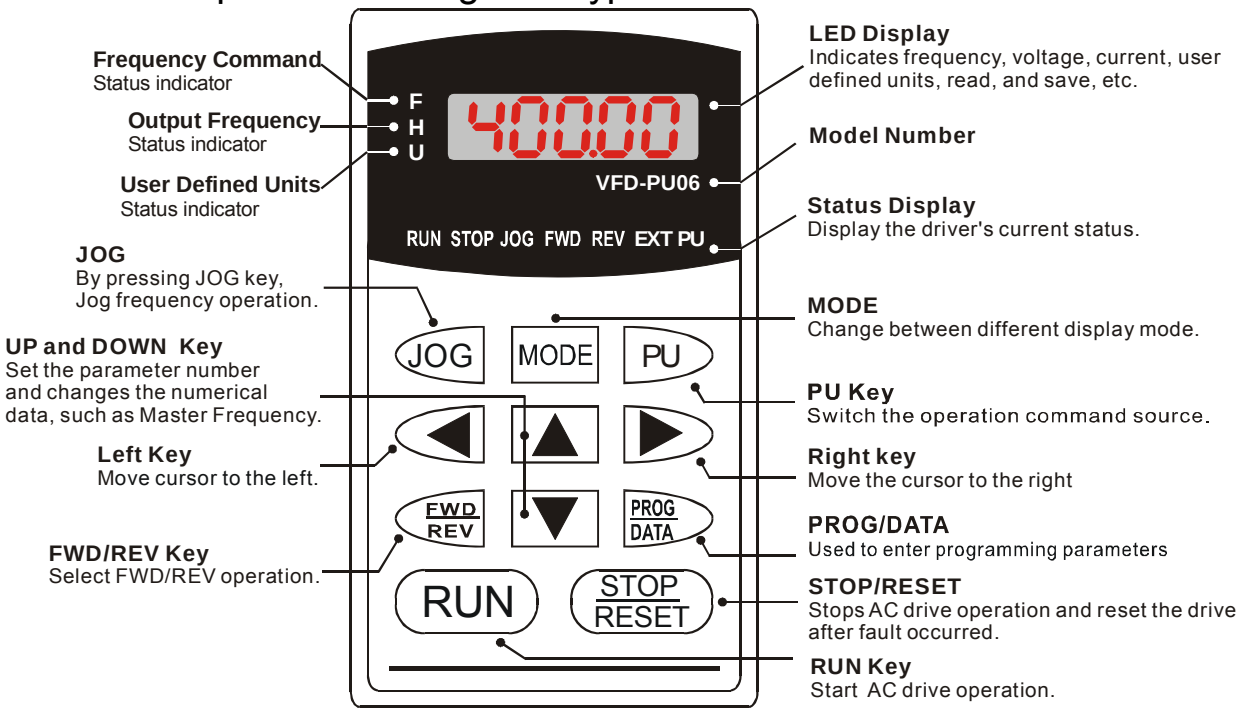


Note:

1) CANopen models are not compatible with PU06 keypad.
2) After completing copying parameters by using a PU06 keypad, a KPC-CC01 keypad or a PC software, do not operating the motor drive right away. Wait for 5 seconds before operating motor drive.

## B.5.2 Explanation of Display Message

| Display Message | Descriptions |
|---|---|
| F 60.00 | The AC motor drive Master Frequency Command. |
| H 50.00 | The Actual Operation Frequency present at terminals U, V, and W. |
| U 180.00 | The custom unit (u) |
| A 5.0 | The output current present at terminals U, V, and W. |
| rEAd0 | Press ▲ to change the mode to READ. Press PROG/DATA for about 2 sec or until it's flashing, read the parameters of AC drive to the digital keypad PU06. It can read 2 groups of parameters to PU06. (read 0 – read 1) |
| SAvE- | Press ▲ to change the mode to SAVE. Press PROG/DATA for about 2 sec or until it's flashing, then write the parameters from the digital keypad PU06 to AC drive. If it has saved, it will show the type of AC motor drive. |
| 06-00 | The specified parameter setting. |
| 10 | The actual value stored in the specified parameter. |

| Display Message | Descriptions |
|---|---|
| E.F. | External Fault |
| -End- | "End" displays for approximately 1 second if the entered input data have been accepted. After a parameter value has been set, the new value is automatically stored in memory. To modify an entry, use the ▲ or ▼ keys. |
| -Err- | "Err" displays if the input is invalid. |
| CE-10 | Communication Error. Please check the AC motor drive user manual (Chapter 5, Group 9 Communication Parameter) for more details. |

## B.5.3 Operation Flow Chart

VFD-PU06 Operation Flow Chart

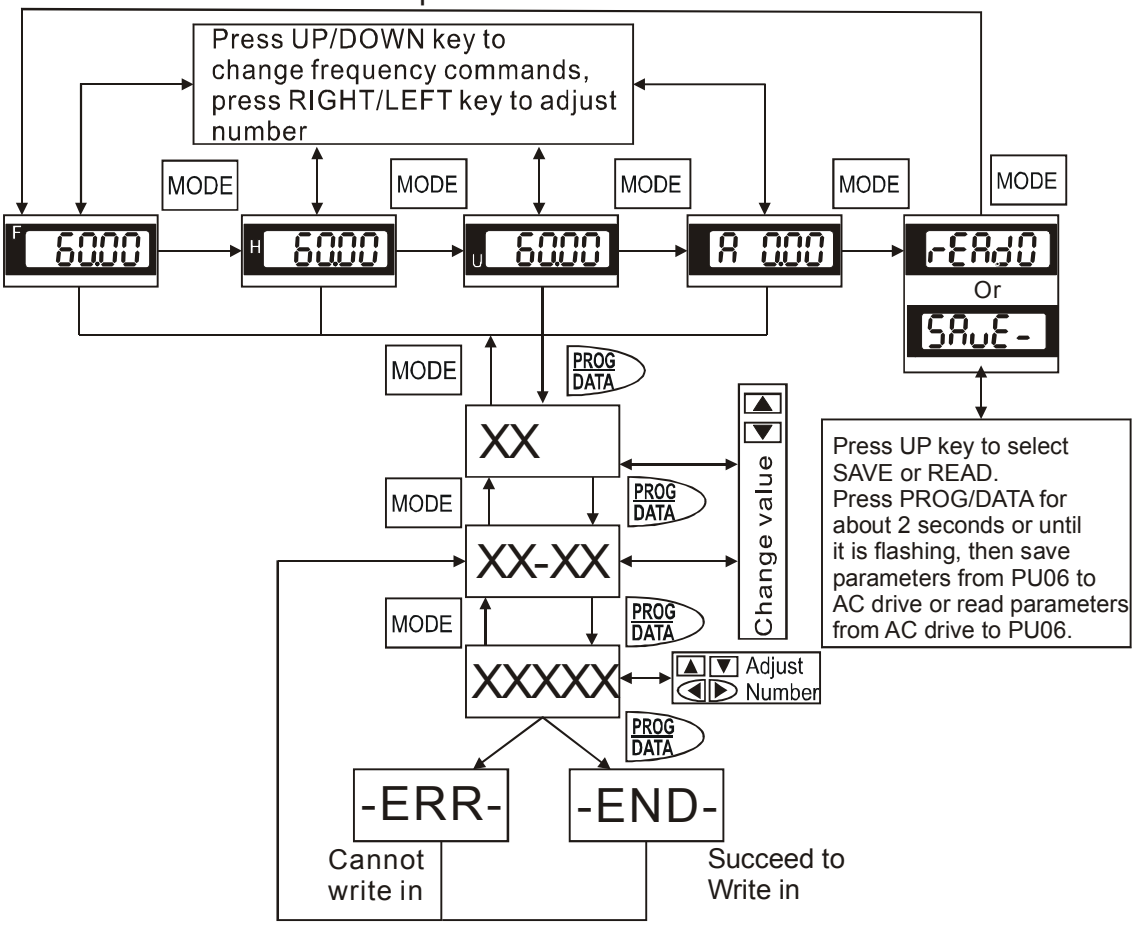

## B.5.4 PU06 Dimensions

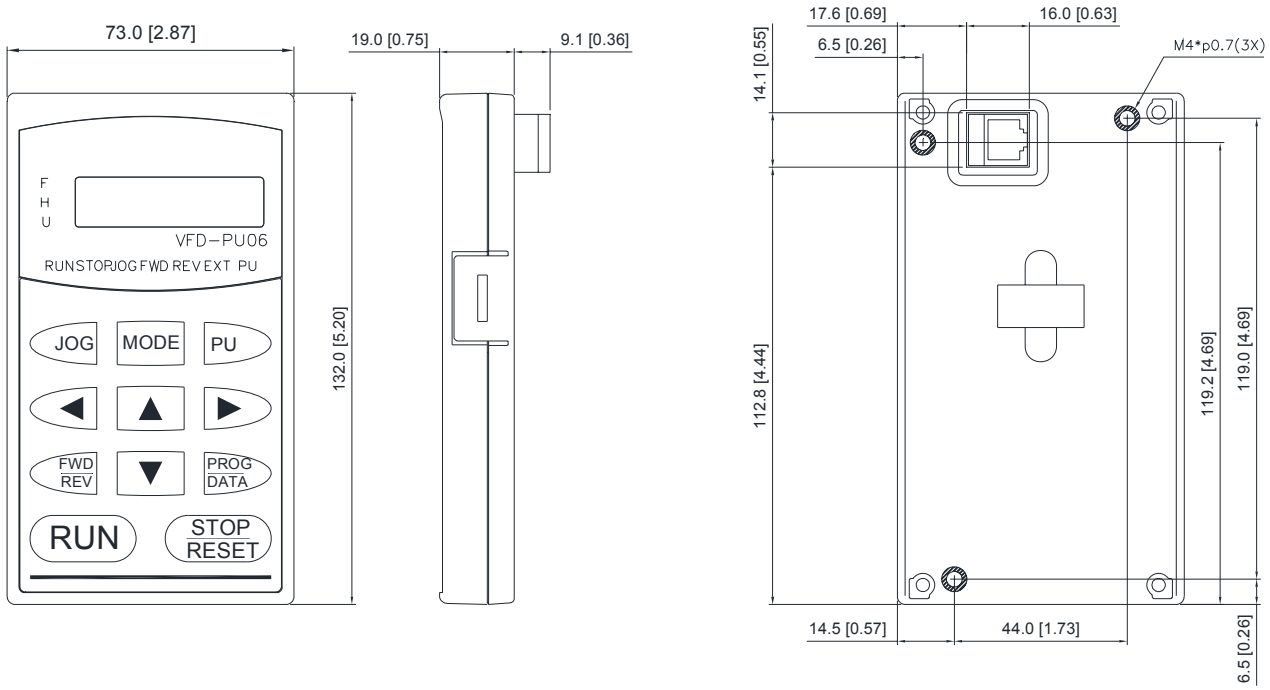


Do NOT copy the setting of the parameters below when copying parameters by using a PU06 keypad, a KPC-CC01 keypad or PC software.

| | |
|---|---|
| **GROUP 0** | |
| 00.00 | Identity Code of the AC motor drive |
| 00.01 | Rated Current Display of the AC motor drive |
| 00.02 | Parameter Reset |
| 00.06 | Power Board Software Version |
| 00.07 | Control Board Software Version |
| **GROUP 2** | |
| 02.16 | Display the Master Freq Command Source |
| 02.17 | Display the Operation Command Source |
| **GROUP 3** | |
| 03.09 | The Digital Output Used by PLC |
| 03.10 | The Analog Output Used by PLC |
| 03.13 | Display the Status of Multi-function Output Terminals |
| **GROUP 4** | |
| 04.24 | The Digital Input Used by PLC |
| 04.25 | The Analog Input Used by PLC |
| 04.26 | Display the Status of Multi-function Input Terminal |
| **GROUP 6** | |
| 06.08 | Present Fault Record |
| 06.09 | Second Most Recent Fault Record |
| 06.10 | Third Most Recent Fault Record |
| 06.11 | Fourth Most Recent Fault Record |
| 06.12 | Fifth Most Recent Fault Record |
| **GROUP 7** | |
| 07.10 | Accumulative Motor Operation Time (Min.) |
| 07.11 | Accumulative Motor Operation Time (Day) |
| **GROUP 8** | |
| 08.23 | OOB Average Sampling Angle |
| **GROUP 13** | |
| 13.10 | Source of the High-speed Counter |

# B.6 KPE-LE02

## B.6.1 Description of the Digital Keypad KPE-LE02

❶ **Status Display**
Display the driver's current status.

❷ **LED Display**
Indicates frequency, voltage, current, user defined units and etc.

❸ **Potentiometer**
For master Frequency setting.

❹ **RUN Key**
Start AC drive operation.

❺ **UP and DOWN Key**
Set the parameter number and changes the numerical data, such as Master Frequency.

❻ **MODE**
Change between different display mode.

❼ **STOP/RESET**
Stops AC drive operation and reset the drive after fault occurred.

❽ **ENTER**
Used to enter/modify programming parameters

| Display Message | Descriptions |
|---|---|
| RUN FWD REV F60.0 STOP | Displays the AC drive Master Frequency. |
| RUN FWD REV H50.0 STOP | Displays the actual output frequency at terminals U/T1, V/T2, and W/T3. |
| RUN FWD REV U180 STOP | User defined unit (where U = F x Pr.00.05) |
| RUN FWD REV A 5.0 STOP | Displays the output current at terminals U/T1, V/T2, and W/T3. |
| RUN FWD REV Frd STOP | Displays the AC motor drive forward run status. |
| RUN FWD REV rEu STOP | Displays the AC motor drive reverse run status. |
| RUN FWD REV c 20 STOP | The counter value (C). |
| RUN FWD REV 06.00 STOP | Displays the selected parameter. |
| RUN FWD REV 10 STOP | Displays the actual stored value of the selected parameter. |
| RUN FWD REV EF STOP | External Fault. |
| RUN FWD REV End STOP | Display “End” for approximately 1 second if input has been accepted by pressing ENTER key. After a parameter value has been set, the new value is automatically stored in memory. To modify an entry, use the ▲ and ▼ keys. |
| RUN FWD REV Err STOP | Display “Err”, if the input is invalid. |

Note:
When the setting exceeds 99.99 for those numbers with 2 decimals (i.e. unit is 0.01), it will only display 1 decimal due to 4-digital display.

## B.6.2 Keypad Dimensions

(Dimensions are in millimeter [inch])

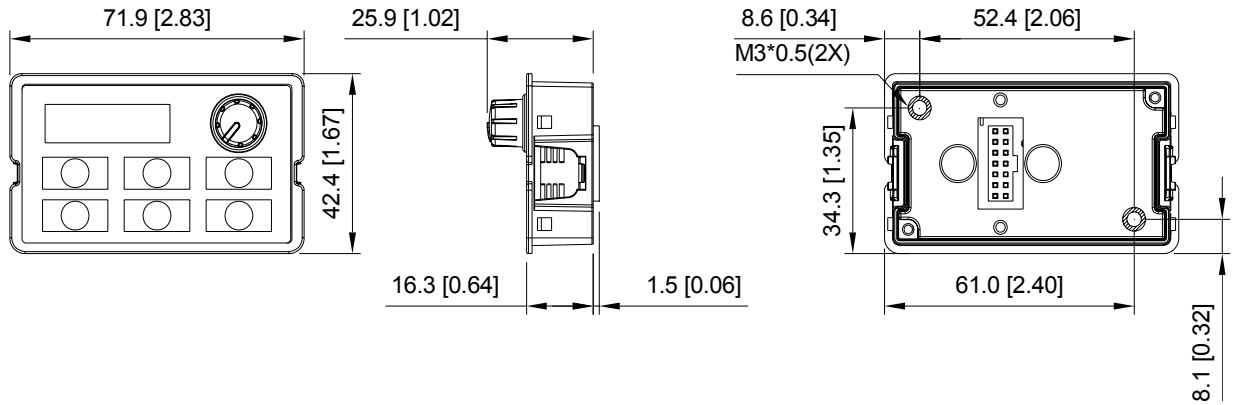


## B.6.3 Digital Keypad Installation

Method1. Install directly (Unit : mm [inch])

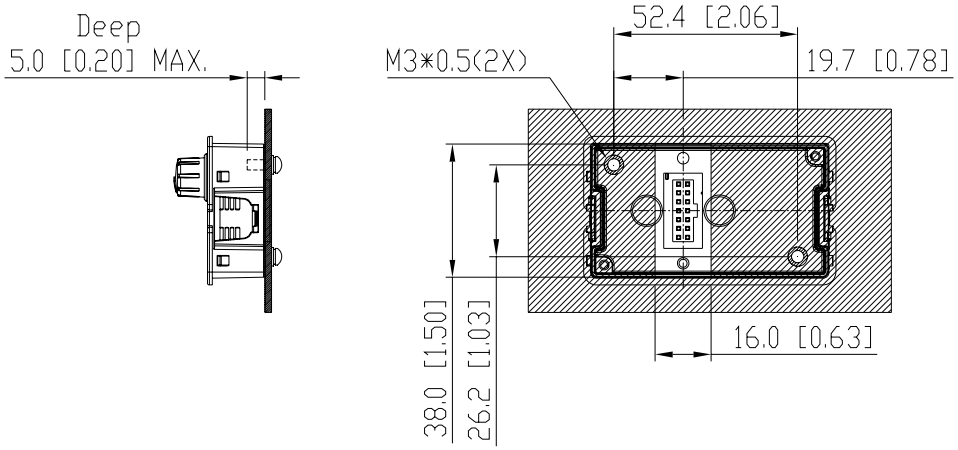


Method2. Install according to plank thickness (Unit: mm [inch])

A. Plank thickness=1.2mm[0.05 inches]

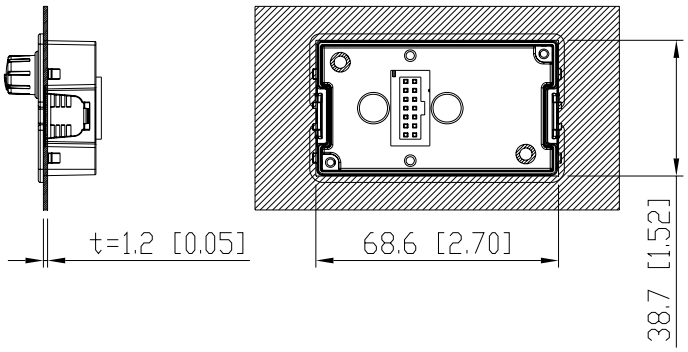


B. Plank thickness =2.0mm[0.08 inches]

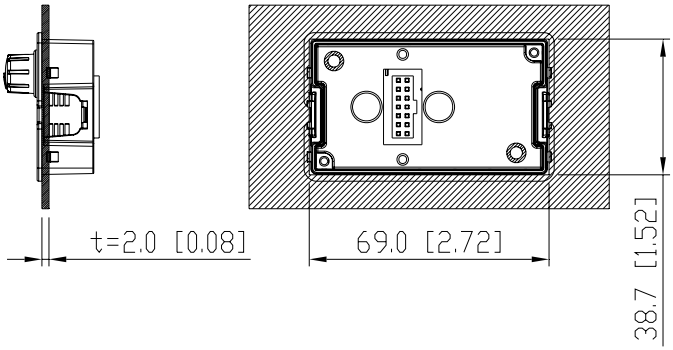

## B.6.4 How to Operate the Digital Keypad

**Setting Mode**

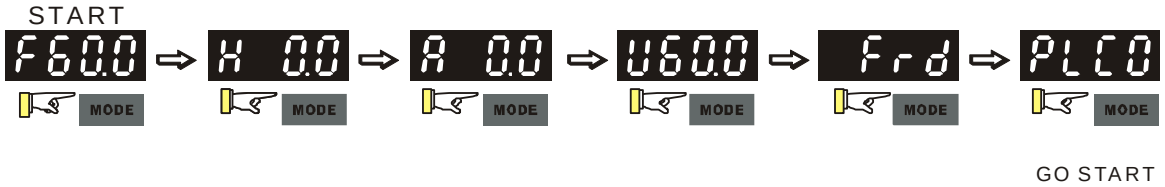


NOTE: In the selection mode, press ENTER to set the parameters.

**Setting parameters**

NOTE :In the parameter setting mode, you can press ENTER to return the selecting mode.

**To shift data**

**Setting direction** (When operation source is digital keypad)

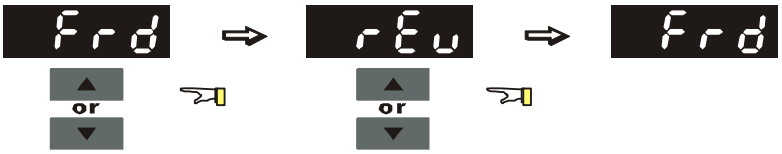


**Setting PLC Mode**

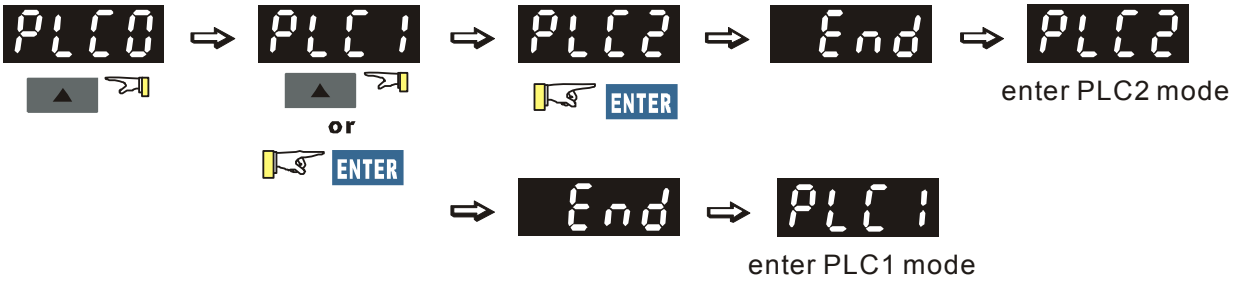

## B.6.5 Reference Table for the 7-segment LED Display of the Digital Keypad

| Digit | 0 | 1 | 2 | 3 | 4 | 5 | 6 | 7 | 8 | 9 |
|---|---|---|---|---|---|---|---|---|---|---|
| LED Display | 0 | 1 | 2 | 3 | 4 | 5 | 6 | 7 | 8 | 9 |
| English alphabet | A | a | B | C | c | D | d | E | e | F |
| LED Display | A | - | - | C | c | - | d | E | - | F |
| English alphabet | f | G | g | H | h | I | i | J | j | K |
| LED Display | - | G | - | H | h | I | i | J | j | K |
| English alphabet | k | L | l | M | m | N | n | O | o | P |
| LED Display | - | L | - | n | - | - | n | O | o | P |
| English alphabet | p | Q | q | R | r | S | s | T | t | U |
| LED Display | - | - | q | - | r | S | - | T | t | U |
| English alphabet | u | V | v | W | w | X | x | Y | y | Z |
| LED Display | - | - | v | - | - | - | - | Y | - | Z |
| English alphabet | z | | | | | | | | | |
| LED Display | - | | | | | | | | | |

## B.7 Extension Card

For details, please refer to the separate instruction shipped with these optional cards or download from our website http://www.delta.com.tw/industrialautomation/.

Installation method:

### B.7.1 Relay Card

| EME-R2CA | Terminal |
|---|---|
| 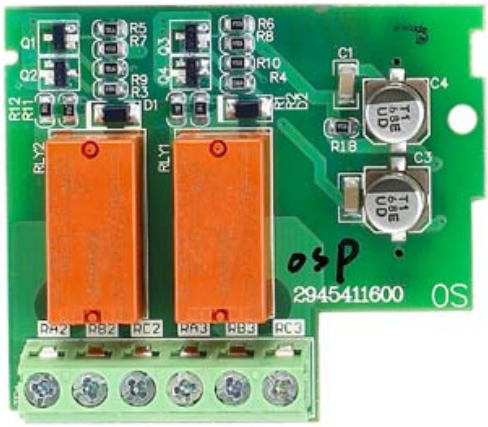 | 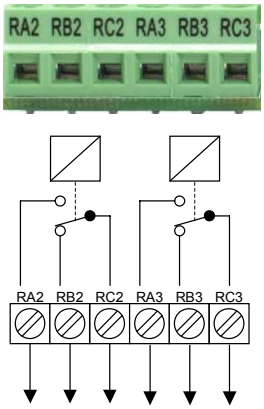 |



- Screw torque of terminal: 5kgf-cm (max.)
- Wire gauge: 12~24 AWG
- If the extension card is installed on the AC motor drive, AC motor drive will detect the extension card automatically, and it can also use the parameter Group 11 for setting. In case there is no extension card installation, the parameters only have Group 0 ~ Group 10 for setting. Please refer to manual CH.5 for detail parameter settings.
- Environment (Please use this product indoor with no dust, corrosive gas and liquid .)

| | |
|---|---|
| Operation Temperature | -10°C to 50°C (Non-condensation, on-frozen) |
| Storage Temperature | -20ºC to +60°C |
| Rated Humidity | Under 90%RH (Non-condensation) |
| Maximum Altitude | Lower than 1000m |
| Vibration | 10Hz≦f≦57Hz Fix Amplitude:0.075mm<br>57Hz≦f≦150Hz Fix Acceleration: 1G<br>(According to IEC 60068-2-6) |

Dimensions: Unit: mm [inch]

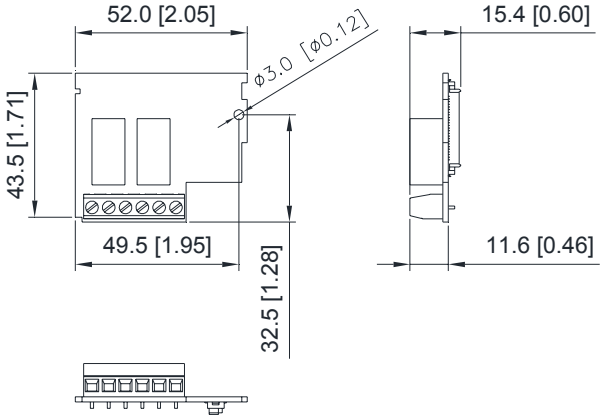


- Input / Output

**EME-R2CA**（Each contact can withstand voltage / current）

| | |
|---|---|
| Resistive Load | C-A (N.O.): 5A 250VAC/30VDC<br>C-B (N.C.): 3A 250VAC/30VDC |
| Inductive Load | C-A (N.O.): 1.5A 250VAC/30VDC<br>C-B (N.C.): 0.5A 250VAC/30VDC |

Warning:

- To connect the inductive load (relay, electromagnetic contactors, motor ... etc.）, please install RC network or Varistor beside the coil.
- Please install fuse (the spec can't greater than contact limits) in the loops for safety concern.
- Please use isolated cable to prevent the interface as far as possible.
- Please have soldering or terminal for cable.
- Based on the safety considerations, please keep more than 15cm with other control, motor and power cables and wiring independently; please keep the vertical wiring if it is necessary for cable staggering.
- All operations can NOT exceed the limitation of spec.

| EME-R3AA | Terminal |
|---|---|
| 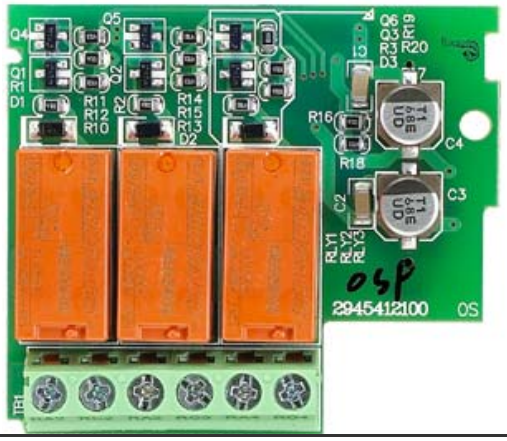 | 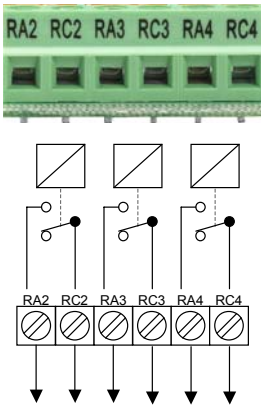 |



- Screw torque of terminal: 5kgf-cm (max.)
- Wire gauge: 12~24 AWG
- If the extension card is installed on the AC motor drive, AC motor drive will detect the extension card automatically, and it can also use the parameter Group 11 for setting. In case there is no extension card installation, the parameters only have Group 0 ~ Group 10 for setting. Please refer to manual CH.5 for detail parameter settings.
- Environment (Please use this product indoor with no dust, corrosive gas and liquid .)

| | |
|---|---|
| Operation Temperature | -10°C to 50°C (Non-condensation, on-frozen) |

| | |
|---|---|
| Storage Temperature | -20ºC to +60°C |
| Rated Humidity | Under 90%RH (Non-condensation) |
| Maximum Altitude | Lower than 1000m |
| Vibration | 10Hz≦f≦57Hz Fix Amplitude:0.075mm<br>57Hz≦f≦150Hz Fix Acceleration: 1G<br>(According to IEC 60068-2-6) |

- Input / Output

  EME-R3AA（Each contact can withstand voltage / current）

| | |
|---|---|
| Resistive Load | 6A 250VAC/30VDC |
| Inductive Load | 2A 250VAC/30VDC |

Warning:

- To connect the inductive load (relay, electromagnetic contactors, motor ... etc.）, please install RC network or Varistor beside the coil.
- Please install fuse (the spec can't greater than contact limits) in the loops for safety concern.
- Please use isolated cable to prevent the interface as far as possible.
- Please have soldering or terminal for cable.
- Based on the safety considerations, please keep more than 15cm with other control, motor and power cables and wiring independently; please keep the vertical wiring if it is necessary for cable staggering.
- All operations can NOT exceed the limitation of spec.

Dimensions: Unit: mm [inch]

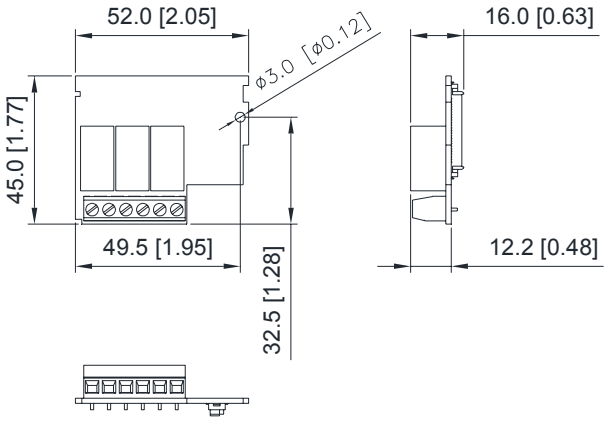

## B.7.2 Digital I/O Card

| EME-D33A | Terminal |
|---|---|
| 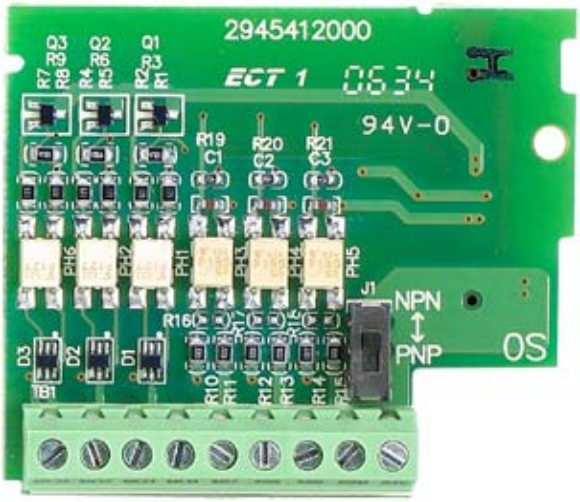 | 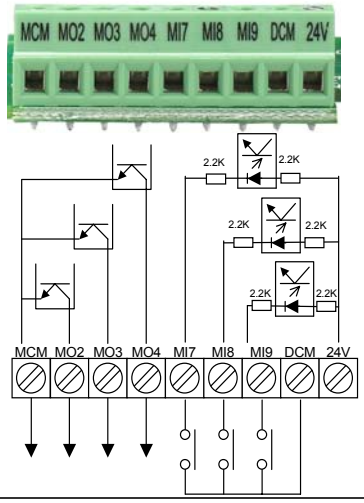 |



- Screw torque of terminal: 2kgf-cm (max.)
- Wire gauge: 16~24 AWG
- If the extension card is installed on the AC motor drive, AC motor drive will detect the extension card automatically, and it can also use the parameter Group 11 for setting. In case there is no extension card installation, the parameters only have Group 0 ~ Group 10 for setting. Please refer to manual CH.5 for detail parameter settings.
- Environment (Please use this product indoor with no dust, corrosive gas and liquid.)

| | |
|---|---|
| Operation Temperature | -10°C to 50°C (Non-condensation, on-frozen) |
| Storage Temperature | -20ºC to +60°C |
| Rated Humidity | Under 90%RH (Non-condensation) |
| Maximum Altitude | Lower than 1000m |
| Vibration | 10Hz≦f≦57Hz Fix Amplitude:0.075mm<br>57Hz≦f≦150Hz Fix Acceleration: 1G<br>(According to IEC 60068-2-6) |

- Input / Output
  EME-D33A

| | |
|---|---|
| MI7~MI9 | ON: Operating current: Min.: 4mA, Max.: 16mA<br>OFF: Allowable leakage current:10μA |
| MO2~MO4 | Withstand voltage / current: 48VDC, 50mA |

Warning:

- To connect the inductive load (relay, electromagnetic contactors, motor ... etc.）, please install RC network or Varistor beside the coil.
- Please install fuse (the spec can't greater than contact limits) in the loops for safety concern.
- Please use isolated cable to prevent the interface as far as possible.
- Please have soldering or terminal for cable.
- Based on the safety considerations, please keep more than 15cm with other control, motor and power cables and wiring independently; please keep the vertical wiring if it is necessary for cable staggering.
- All operations can NOT exceed the limitation of spec.

Dimensions: Unit: mm [inch]

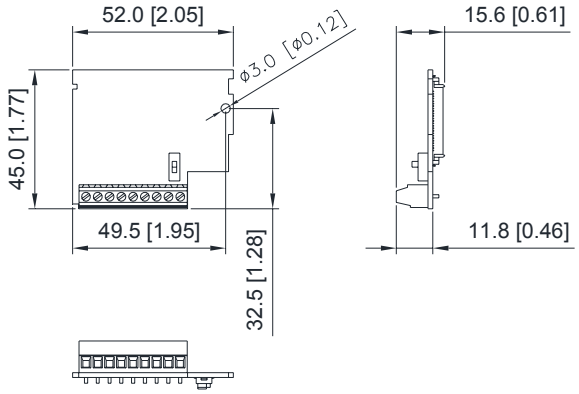


## B.7.3 Analog I/O Card

| EME-A22A | Terminal |
|---|---|
| 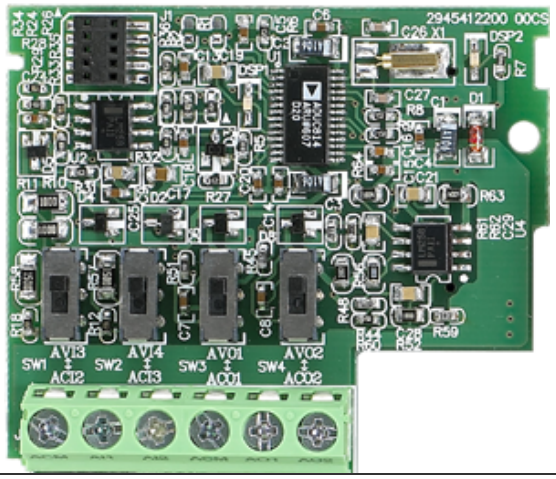 | |



- Screw torque of terminal: 5kgf-cm (max.)
- Wire gauge: 14~24 AWG(2.1 ~ 0.2 $mm^2$)
- If the extension card is installed on the AC motor drive, AC motor drive will detect the extension card automatically, and it can also use the parameter Group 12 for setting. In case there is no extension card installation, the parameters only have Group 0 ~ Group 10 for setting. Please refer to manual CH.5 for detail parameter settings.
- Environment (Please use this product indoor with no dust, corrosive gas and liquid .)

| | |
|---|---|
| Operation Temperature | -10°C to 50°C (Non-condensation, on-frozen) |
| Storage Temperature | -20ºC to +60°C |
| Rated Humidity | Under 90%RH (Non-condensation) |
| Maximum Altitude | Lower than 1000m |
| Vibration | 10Hz≦f≦57Hz Fix Amplitude:0.075mm<br>57Hz≦f≦150Hz Fix Acceleration: 1G<br>(According to IEC 60068-2-6) |

■ Input / Output

EME-A22A

| Terminal | Description |
|---|---|
| AI1<br>AI2 | Input voltage range：0 ~ 10VDC =0 ~ Max. output frequency(Pr.01.00)<br>Input impedance：100KΩ<br>Resolution：12 bits |
| | Input current range：DC 0 ~ 20mA=0 ~ Max. output frequency (Pr.01.00)<br>Input impedance：250Ω<br>Resolution：12 bits |
| AO1<br>AO2 | Input voltage range：DC 0 ~ 10V<br>Input impedance：1K ~ 2MΩ<br>Resolution：12 bits |
| | Input current range：DC 0 ~ 20mA<br>Input impedance：0 ~ 500Ω<br>Resolution：12 bits |
| ACM | Analog control signal common terminal |

Warning:

- To connect the inductive load (relay, electromagnetic contactors, motor ... etc.）, please install RC network or Varistor beside the coil.
- Please install fuse (the spec can't greater than contact limits) in the loops for safety concern.
- Please use isolated cable to prevent the interface as far as possible.
- Please have soldering or terminal for cable.
- Based on the safety considerations, please keep more than 15cm with other control, motor and power cables and wiring independently; please keep the vertical wiring if it is necessary for cable staggering.
- All operations can NOT exceed the limitation of spec.

Dimensions: Unit: mm [inch]

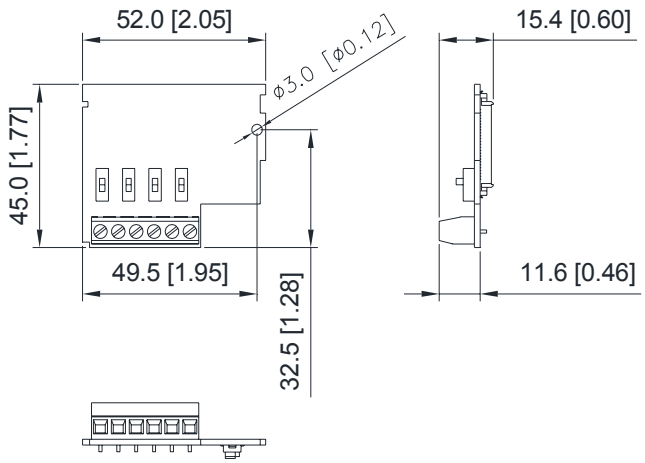

| EME-A1D3A | Terminal |
|---|---|
| 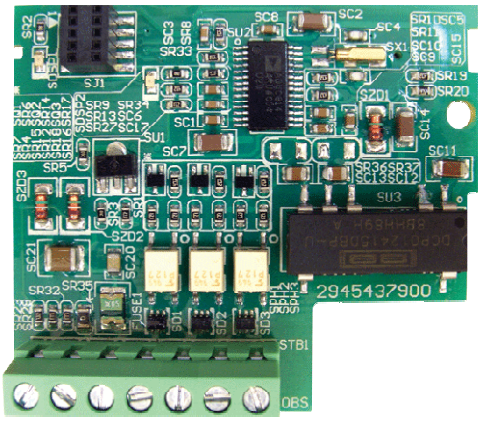 | |

■ Screw torque of terminal: 2kgf-cm (max.)

■ Wire gauge: 16 ~ 24 AWG

| Terminal | Terminal Function | Function Description |
|---|---|---|
| AUI | Analog voltage frequency command | Input voltage range：-10~+10V<br>Input impedance：100KΩ<br>Resolution：12 bits |
| DCM | Digital control signal common terminal | Common for digital inputs and used for NPN mode |
| -10V | Power for speed setting | Power for Analog frequency setting -10VDC , 10mA |
| MO2 | Multi-function output terminal 2 (optical coupling) | Reference Parameters :Pr.11.00<br> 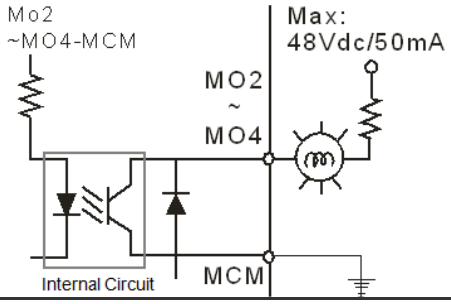  |
| MO3 | Multi-function output terminal 3 (optical coupling) | |
| MO4 | Multi-function output terminal 4 (optical coupling) | |
| MCM | Multi-function output common terminal (optical coupling) | The common side of multi-function output terminal |

Dimensions: Unit: mm [inch.]

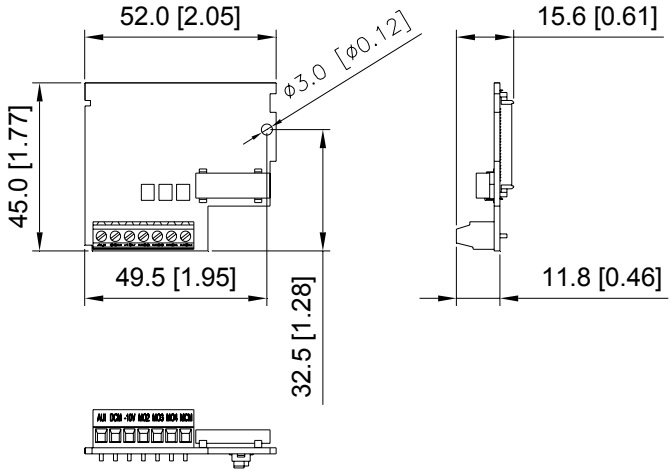

## B.7.4 Multi-function Input Terminal MI1~MI6-COM Card

| EME-D611A (Internal Version) | Terminal |
|---|---|
| 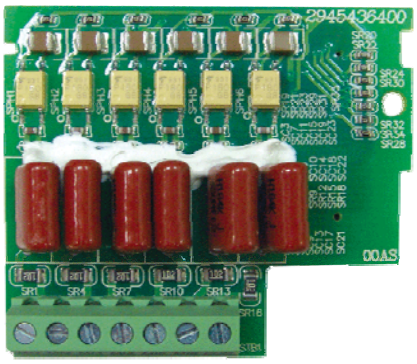 | |

| Specification | |
|---|---|
| Input | 6 + 1 Neutrals |
| Output Voltage | 100~130VAC/8.125mA max |
| Output Frequency | 57~63HZ |
| Input impedance | 16Kohm |
| Conduction response time | 5ms |
| disconnection response time | 15ms |

Dimensions: Unit: mm [inch.]

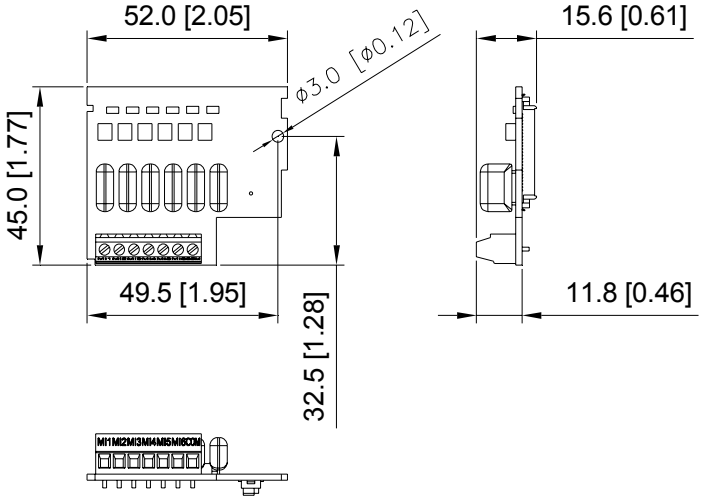


| EME-D611B (External Version) | Terminal |
|---|---|
| 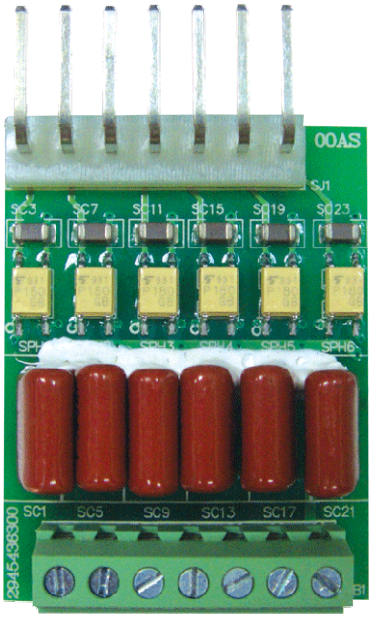 | |

| Specification | |
|---|---|
| Input | 6 + 1 Neutrals |
| Output Voltage | 100~130VAC/8.125mA max |
| Output Frequency | 57~63HZ |
| Input impedance | 16Kohm |
| Conduction response time | 10ms |
| disconnection response time | 20ms |

- Screw torque of terminal: 2kgf-cm (max.)
- Wire gauge: 16 ~ 24 AWG

Dimensions: Unit: mm [inch.]

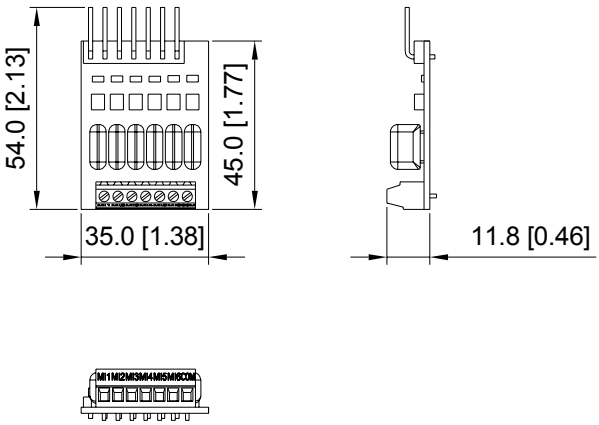


## B.7.5 Communication Card

| CME-USB01 | USB: TYPE B |
|---|---|
| 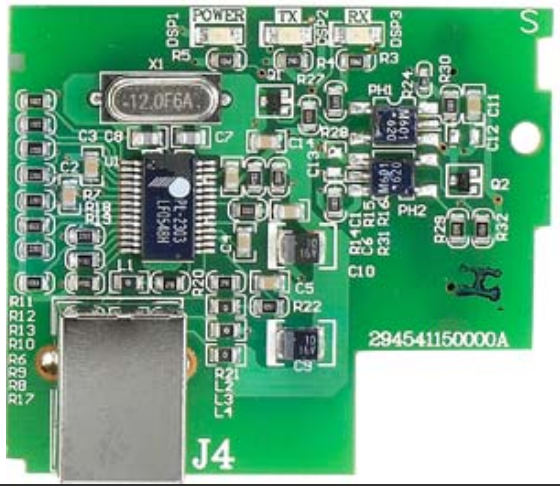 | |

Dimensions: Unit: mm [inch.]

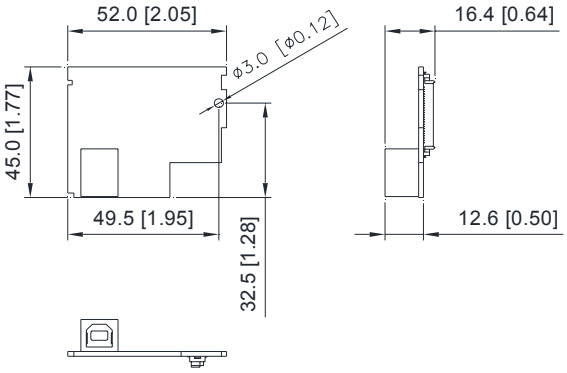

## B.7.6 Speed Feedback Card

| EME-PG01 | Terminal |
|---|---|
| 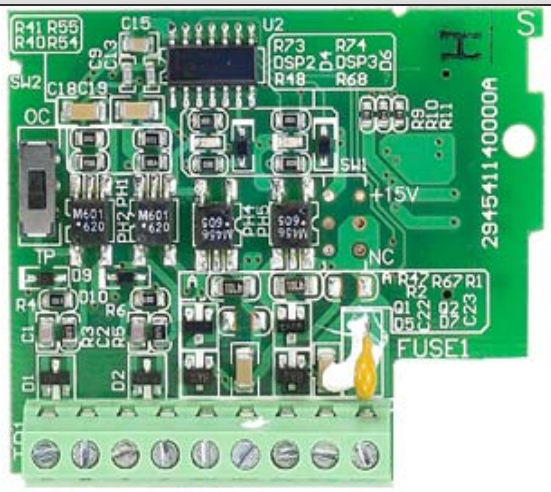 | |



- Screw torque of terminal: 2kgf-cm (max.)
- Wire gauge: 16 ~ 24 AWG

Dimensions: Unit: mm [inch.]

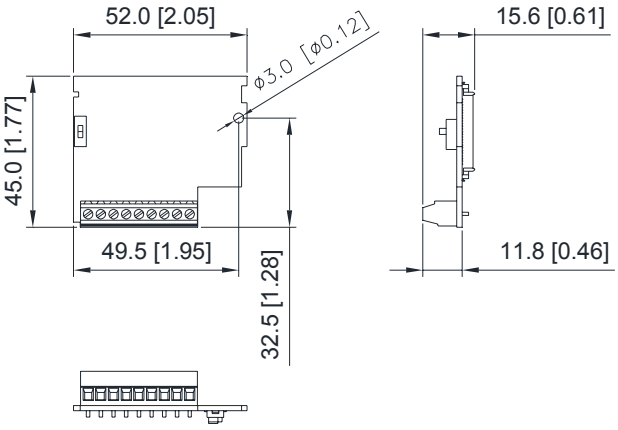

# B.8 Fieldbus Modules

## B.8.1 DeviceNet Communication Module (CME-DN01)

### B.8.1.1 Panel Appearance and Dimensions

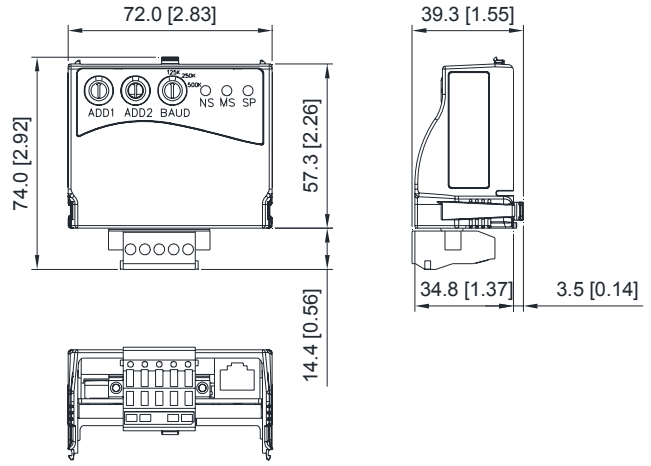


1. For RS-485 connection to VFD-E
2. Communication port for connecting DeviceNet network
3. Address selector
4. Baud rate selector
5. Three LED status indicators for monitor

Unit: mm[inch.]

### B.8.1.2 Wiring and Settings

Refer to following diagram for details.

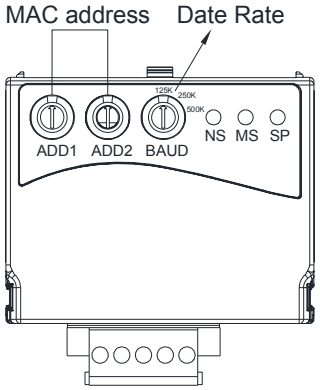


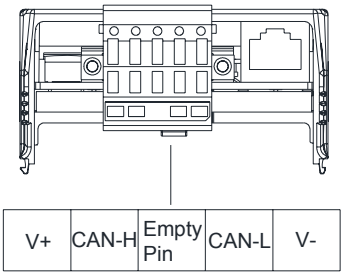


1: Reserved
2. EV
3. GND
4. SG-
5. SG+
6. Reserved
7. Reserved
8. Reserved

Setting baud rate

| | | | | | |
|---|---|---|---|---|---|
| 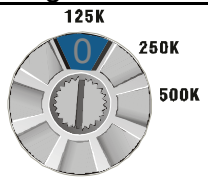  BAUD | Switch Value | 0 | 1 | 2 | Other |
| | Baud Rate | 125K | 250K | 500K | Auto |

Setting MAC addresses: use decimal system.

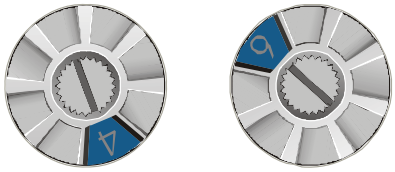

ADD1 ADD2

## B.8.1.3 Mounting Method

Step1 and step2 show how to mount this communication module onto VFD-E. The dimension on the left hand side is for your reference.

| Dimensions | STEP 1 | STEP 2 |
|---|---|---|
| 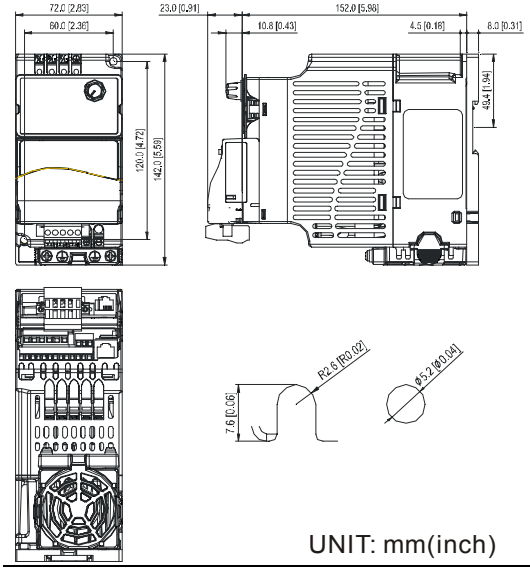 UNIT: mm(inch) | | |

## B.8.1.4 Power Supply

No external power is needed. Power is supplied via RS-485 port that is connected to VFD-E. An 8 pins RJ-45 cable, which is packed together with this communication module, is used to connect the RS-485 port between VFD-E and this communication module for power. This communication module will perform the function once it is connected. Refer to the following paragraph for LED indications.

## B.8.1.5 LEDs Display

1. SP: Green LED means in normal condition, Red LED means abnormal condition.
2. MS (Module): Green blinking LED means no I/O data transmission, Green steady LED means I/O data transmission OK. Red LED blinking or steady LED means module communication is abnormal.
3. Ns (Network): Green LED means DeviceNet communication is normal, Red LED means abnormal

Note:

Refer to user manual for detail information-- *Chapter 5 Troubleshooting*.

## B.8.2 Profibus Communication Module (CME-PD01)

### B.8.2.1 Panel Appearance

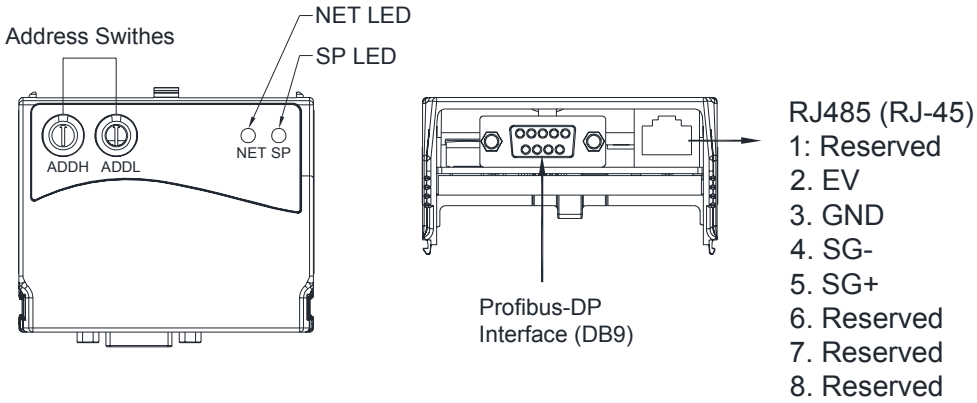


1. SP LED: Indicating the connection status between VFD-E and CME-PD01.
2. NET LED: Indicating the connection status between CME-PD01 and PROFIBUS-DP.
3. Address Switches: Setting the address of CME-PD01 on PROFIBUS- DP network.
4. RS-485 Interface (RJ45): Connecting to VFD-E, and supply power to CME-PD01.
5. PROFIBUS-DP Interface (DB9): 9-PIN connector that connects to PROFIBUS-DP network.
6. Extended Socket: 4-PIN socket that connects to PROFIBUS-DP network.

### B.8.2.2 Dimensions

Unit: mm[inch]

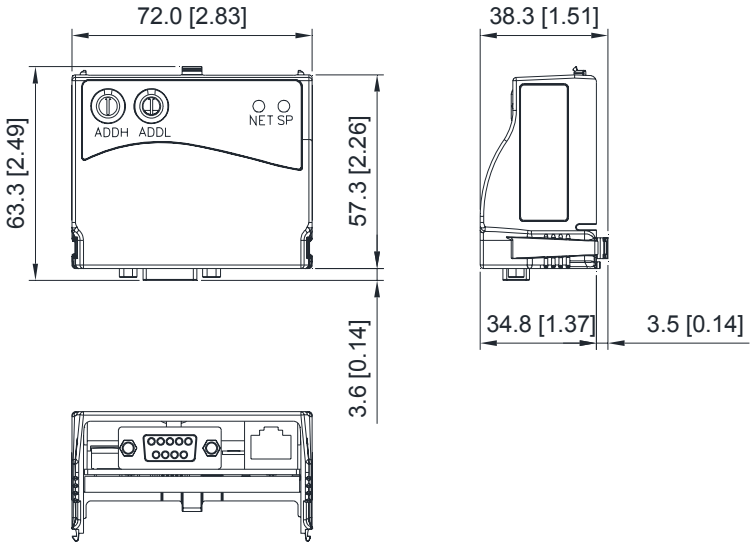


### B.8.2.3 Parameters Settings in VFD-E

| | VFD-E |
|---|---|
| Baud Rate 9600 | Pr.09.01=1 |
| RTU 8, N, 2 | Pr.09.04=3 |
| Freq. Source | Pr.02.00=4 |
| Command Source | Pr.02.01=3 |

## B.8.2.4 Power Supply

The power of CME-PD01 is supplied from VFD-E. Please connect VFD-E to CME-PD01 by using 8 pins RJ-45 cable, which is packed together with CME-PD01. After connection is completed, CME-PD01 is powered whenever power is applied to VFD-E.

## B.8.2.5 PROFIBUS Address

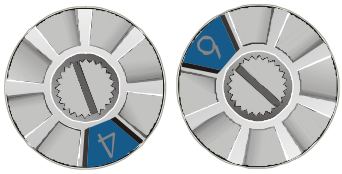


ADDH ADDL

CME-PD01 has two rotary switches for the user to select the PROFIBUS address. The set value via 2 address switches, ADDH and ADDL, is in HEX format. ADDH sets the upper 4 bits, and ADDL sets the lower 4 bits of the PROFIBUS address.

| Address | Meaning |
|---|---|
| 1..0x7D | Valid PROFIBUS address |
| 0 or 0x7E..0xFE | Invalid PROFIBUS address |

## B.8.3 CME-COP01 (CANopen)

CME-COP01 CANopen communication module is specifically for connecting to CANopen communication module of Delta VFD-E AC motor drive.

### B.8.3.1 Product Profile

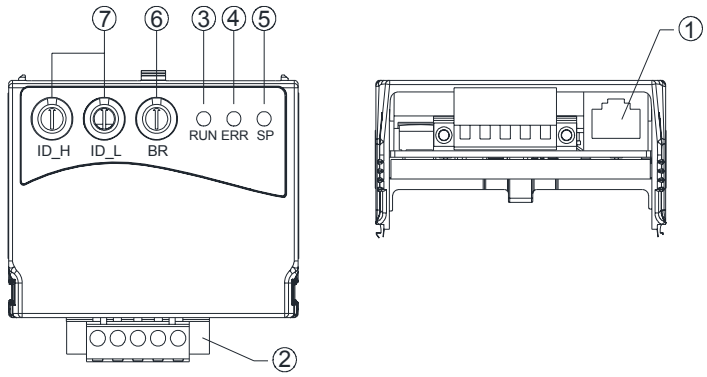


| | |
|---|---|
| ① | COM port |
| ② | CANopen connection port |
| ③ | RUN indicator |
| ④ | ERROR indicator |
| ⑤ | SP (Scan Port) indicator |
| ⑥ | Baud rate switch |
| ⑦ | Address switch |

### B.8.3.2 Specifications

CANopen Connection

| | |
|---|---|
| Interface | Pluggable connector (5.08mm) |
| Transmission method | CAN |
| Transmission cable | 2-wire twisted shielded cable |
| Electrical isolation | 500V DC |

Communication

| | | | |
|---|---|---|---|
| Message type | Process Data Objects (PDO) | Baud rate | 10 Kbps |
| | | | 20 Kbps |
| | Service Data Object (SDO) | | 50 Kbps |
| | Synchronization (SYNC) | | 125 Kbps |
| | Emergency (EMCY) | | 250 Kbps |
| | Network Management (NMT) | | 500 Kbps |
| | | | 800 Kbps |
| | | | 1 Mbps |
| Product code | Delta VFD-E AC motor drive 22 | | |
| Device type | 402 | | |
| Vendor ID | 477 | | |

Environmental Specifications

| | |
|---|---|
| Noise Immunity | ESD(IEC 61131-2, IEC 61000-4-2): 8KV Air Discharge<br>EFT(IEC 61131-2, IEC 61000-4-4): Power Line: 2KV, Digital I/O: 1KV, Analog & Communication I/O: 1KV<br>Damped-Oscillatory Wave: Power Line: 1KV, Digital I/O: 1KV<br>RS(IEC 61131-2, IEC 61000-4-3): 26MHz ~ 1GHz, 10V/m |

| | |
|---|---|
| Environment | Operation: 0°C ~ 55°C (Temperature), 50 ~ 95% (Humidity), Pollution degree 2;<br>Storage: -40°C ~ 70°C (Temperature), 5 ~ 95% (Humidity) |
| Vibration / Shock Resistance | Standard: IEC1131-2, IEC 68-2-6（TEST Fc/IEC1131-2 & IEC 68-2-27 (TEST Ea) |
| Certifications | Standard: IEC 61131-2,UL508 |

## B.8.3.3 Components

Pin Definition on CANopen Connection Port

To connect with CANopen, use the connector enclosed with CME-COP01 or any connectors you can buy in the store for wiring.

| Pin | Signal | Content |
|---|---|---|
| 1 | CAN_GND | Ground / 0 V / V- |
| 2 | CAN_L | Signal- |
| 3 | SHIELD | Shield |
| 4 | CAN_H | Signal+ |
| 5 | - | Reserved |

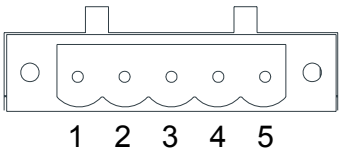


Baud Rate Setting

Rotary switch (BR) sets up the communication speed on CANopen network in hex. Setup range: 0 ~ 7 (8 ~F are forbidden)

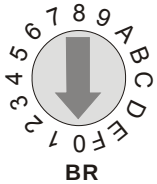


Example: If you need to set up the communication speed of CME-COP01 as 500K, simply switch BR to “5”.

| BR Value | Baud rate | BR Value | Baud rate |
|---|---|---|---|
| 0 | 10K | 4 | 250K |
| 1 | 20K | 5 | 500K |
| 2 | 50K | 6 | 800K |
| 3 | 125K | 7 | 1M |

MAC ID Setting

Rotary switches (ID_L and ID_H) set up the Node-ID on CANopen network in hex. Setup range: 00 ~ 7F (80 ~FF are forbidden)

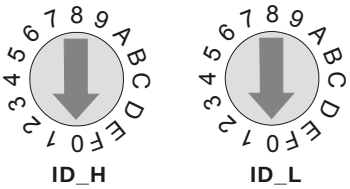


Example: If you need to set up the communication address of CME-COP01 as 26(1AH), simply switch ID_H to “1” and ID_L to “A”.

| Switch Setting | Content |
|---|---|
| 0 … 7F | Valid CANopen MAC ID setting |
| Other | Invalid CANopen MAC ID setting |

## B.8.3.4 LED Indicator Explanation & Troubleshooting

There are 3 LED indicators, RUN, ERROR and SP, on CME-COP01 to indicate the communication status of CME-COP01.

RUN LED

| LED Status | State | Indication |
|---|---|---|
| OFF | No power | No power on CME-COP01 card |
| Single Flash (Green) | STOPPED | CME-COP01 is in STOPPED state |
| Blinking (Green) | PRE-OPERATIONAL | CME-COP01 is in the PRE-OPERATIONAL state |
| Green ON | OPERATIONAL | CME-COP01 is in the OPERATIONAL state |
| Red ON | Configuration error | Node-ID or Baud rate setting error |

ERROR LED

| LED Status | State | Indication |
|---|---|---|
| OFF | No error | CME-COP01 is working condition |
| Single Flash (Red) | Warning limit reached | At least one of error counter of the CANopen controller has reached or exceeded the warning level (too many error frames) |
| Double Flash (Red) | Error control event | A guard event or heartbeat event has occurred |
| Red ON | Bus-off | The CANopen controller is bus-off |

SP LED

| LED Status | State | Indication |
|---|---|---|
| OFF | No Power | No power on CME-COP01 card |
| LED Blinking (Red) | CRC check error | Check your communication setting in VFD-E drives (19200,<8,N,2>,RTU) |
| Red ON | Connection failure/No connection | 1. Check the connection between VFD-E drive and CME-COP01 card is correct<br>2. Re-wire the VFD-E connection and ensure that the wire specification is correct |
| LED Blinking (Green) | CME-COP01 returns error code | Check the PLC program, ensure the index and sub-index is correct |
| Green ON | Normal | Communication is normal |

LED Descriptions

| State | Description |
|---|---|
| LED ON | Constantly on |
| LED OFF | Constantly off |
| LED blinking | Flash, on for 0.2s and off for 0.2s |
| LED single flash | On for 0.2s and off for 1s |

| | |
|---|---|
| LED double flash | On for 0.2s off for 0.2s, on for 0.2s and off for 1s |

## B.8.4 MKE-HUB01

In order to improve the reliability for multiple communication wiring, Delta has developed a special communication hub MKE-HUB01.
Please refer to the following diagram for operating and wiring：

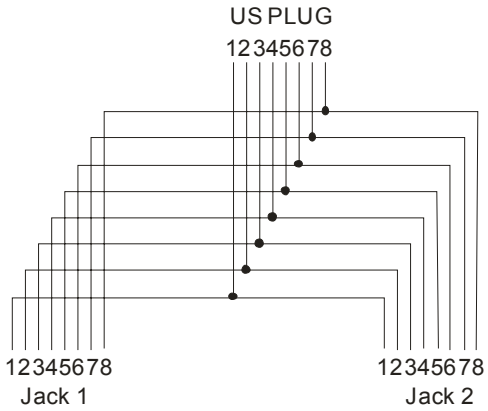


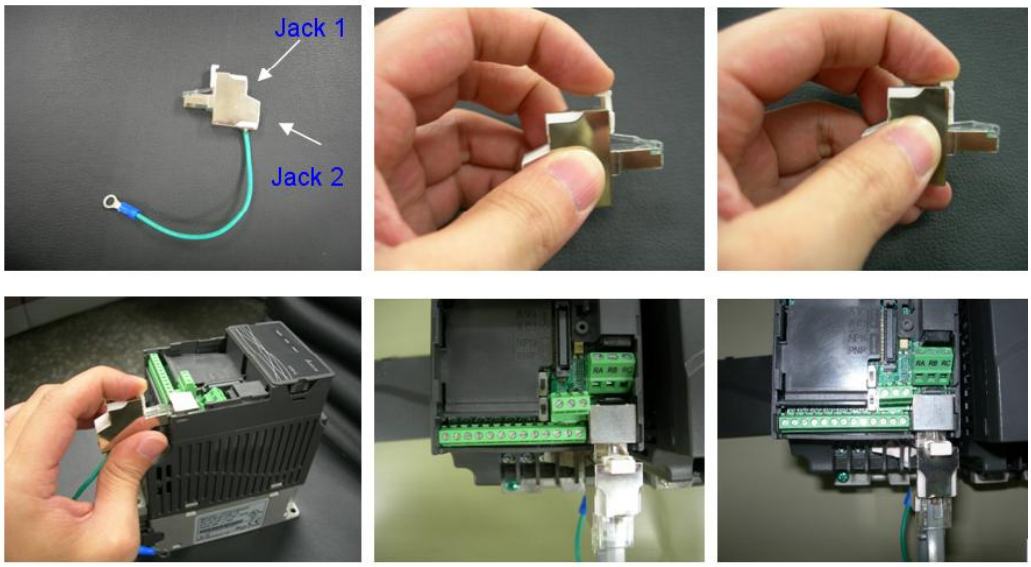

## B.8.5 IFD6500

### Introduction

IFD6500 is a convenient RS-485-to-USB converter, which does not require external power-supply and complex setting process. It supports baud rate from 75 to 115.2kbps and auto switching direction of data transmission. In addition, it adopts RJ-45 in RS-485 connector for users to wire conveniently. And its tiny dimension, handy use of plug-and-play and hot-swap provide more conveniences for connecting all DELTA IABU products to your PC.
Applicable Models: All DELTA IABU products.

### Application & Dimension

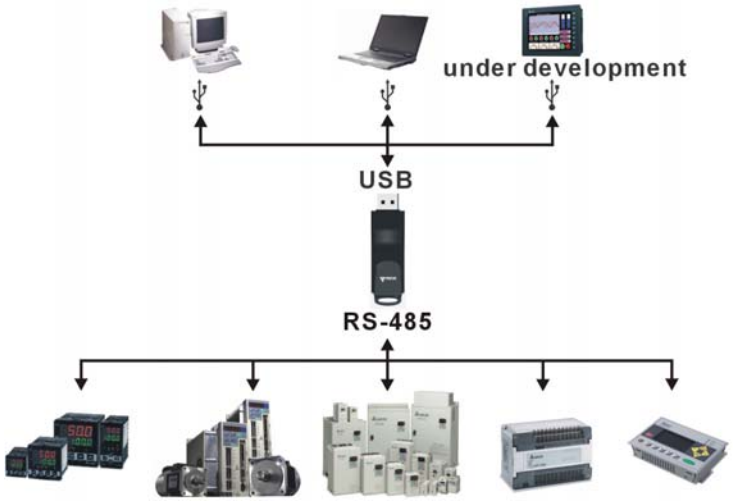


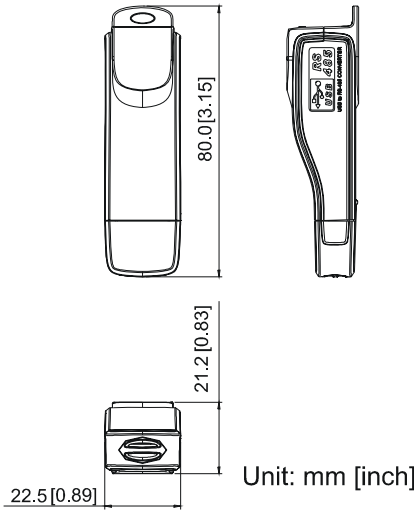


### Specifications

| | |
|---|---|
| Power supply | No external power is needed |
| Power consumption | 0.4W |
| Isolated voltage | 2,500VDC |
| Baud rate | 75, 150, 300, 600, 1,200, 2,400, 4,800, 9,600, 19,200, 38,400, 57,600, 115,200 bps |
| RS-485 connector | RJ-45 |
| USB connector | A type (plug) |
| Compatibility | Full compliance with USB V2.0 specification |
| Max. cable length | RS-485 Communication Port: 100 m |
| Support RS-485 half-duplex transmission | |

### RJ-45

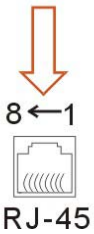


| PIN | Description |
|---|---|
| 1 | Reserved |
| 2 | Reserved |
| 3 | Reserved |
| 4 | SG+ |

| PIN | Description |
|---|---|
| 5 | SG- |
| 6 | Reserved |
| 7 | Reserved |
| 8 | Reserved |

### Preparations before Driver Installation

Please extract the driver file by following steps. You could find driver file in the CD supplied with IFD6500.

**Note:** DO NOT connect IFD6500 to PC before extracting the driver file.

## STEP 1

## STEP 2

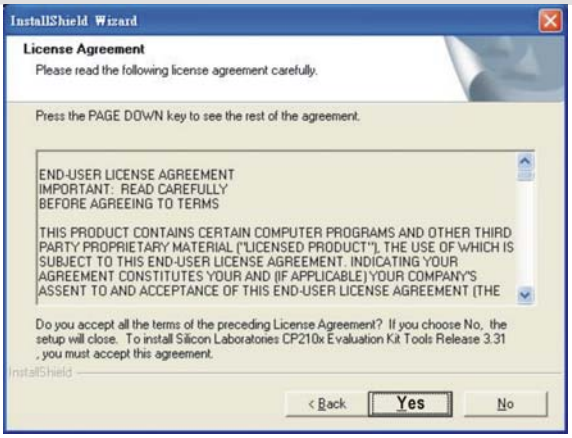


## STEP 3

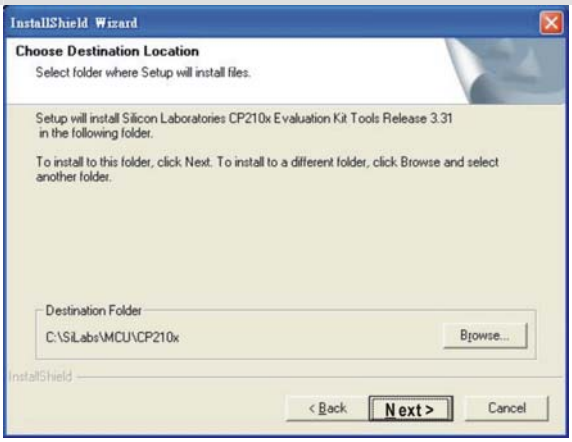


## STEP 4

## STEP 5

You should have a folder marked SiLabs under drive C.

# Driver Installation

After connecting IFD6500 to PC, please install driver by following steps.

STEP 1

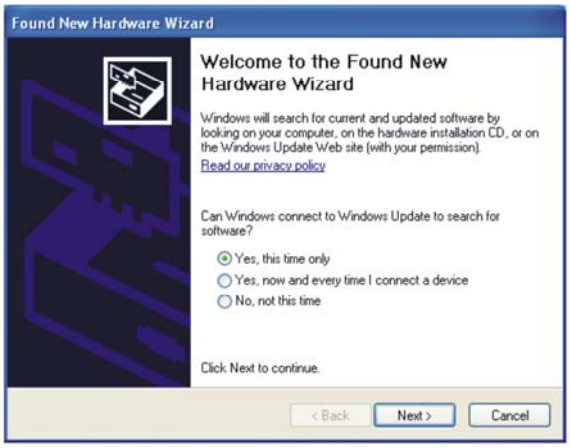


STEP 2

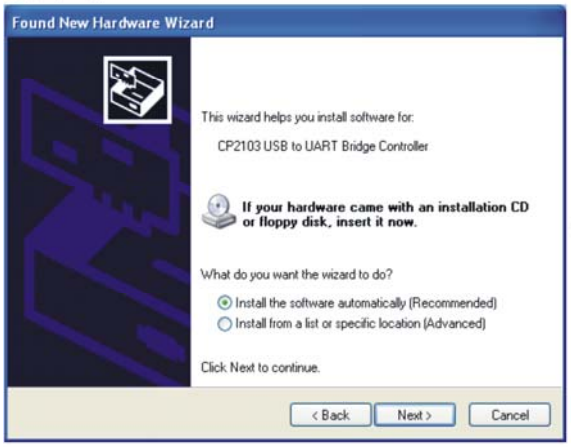


OR

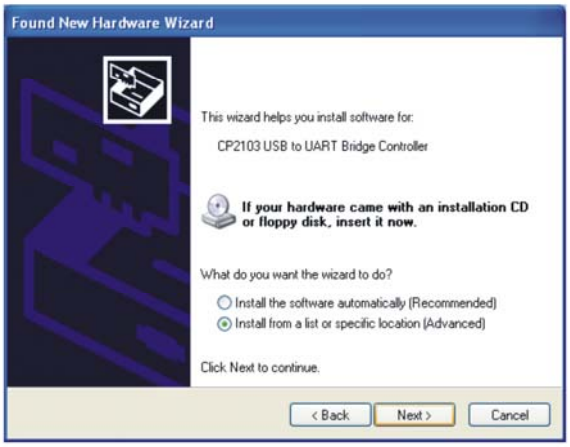


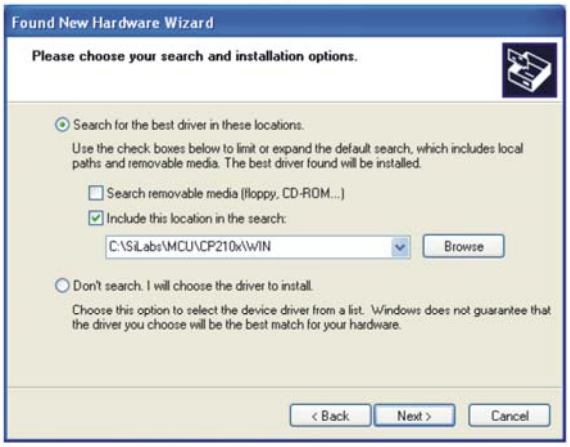


Browse and select directory, or enter C:\SiLabs\MCU\CP210x\WIN

STEP 3

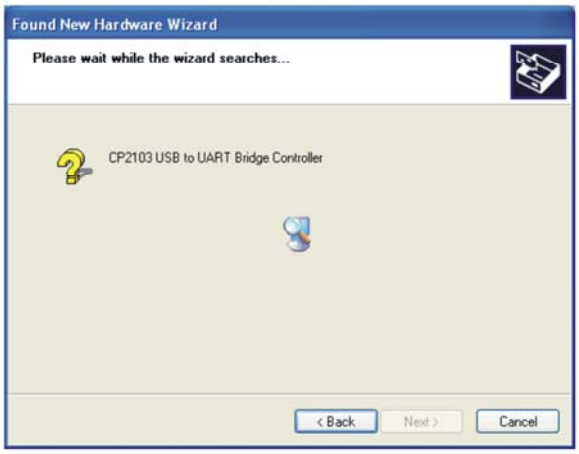


STEP 4

STEP 5
Repeat Step 1 to Step 4 to complete COM PORT setting.

## LED Display

1. Steady Green LED ON: power is ON.
2. Blinking orange LED: data is transmitting.

# B.9 DIN Rail

## B.9.1 MKE-DRA

Unit: mm [inch]

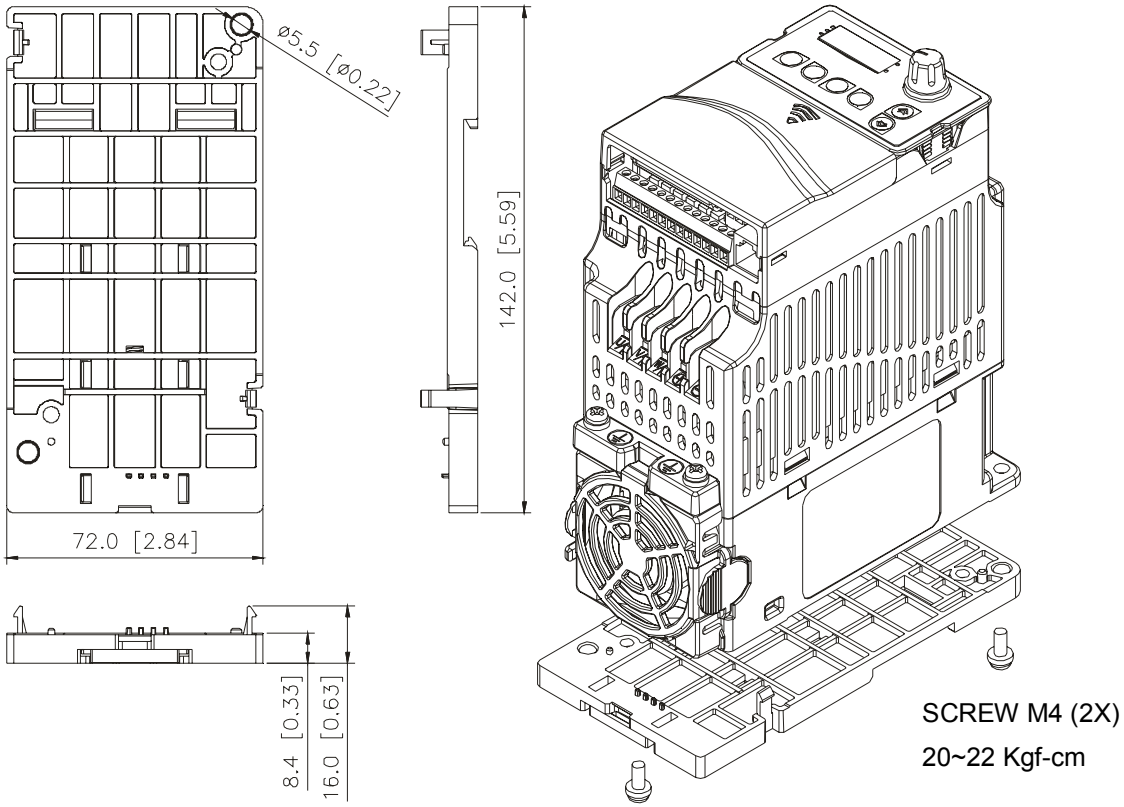

## B.9.2 MKE-DRB

Unit: mm [inch]

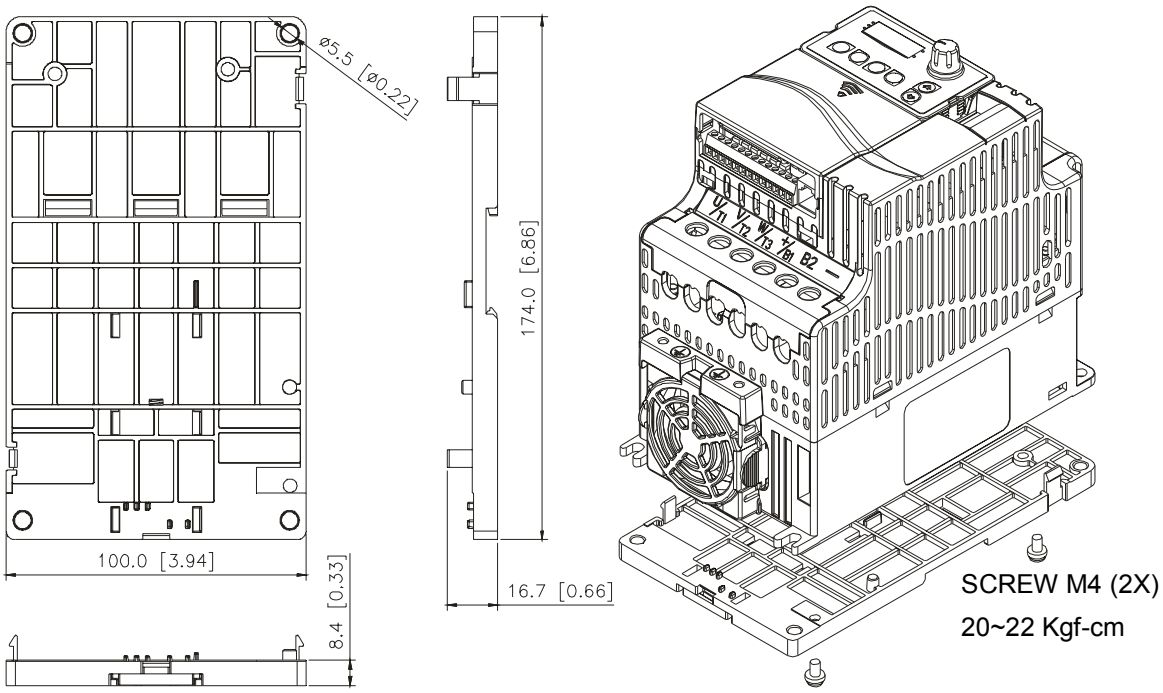


## B.9.3 MKE-EP

EMC earthing plate for Shielding Cable

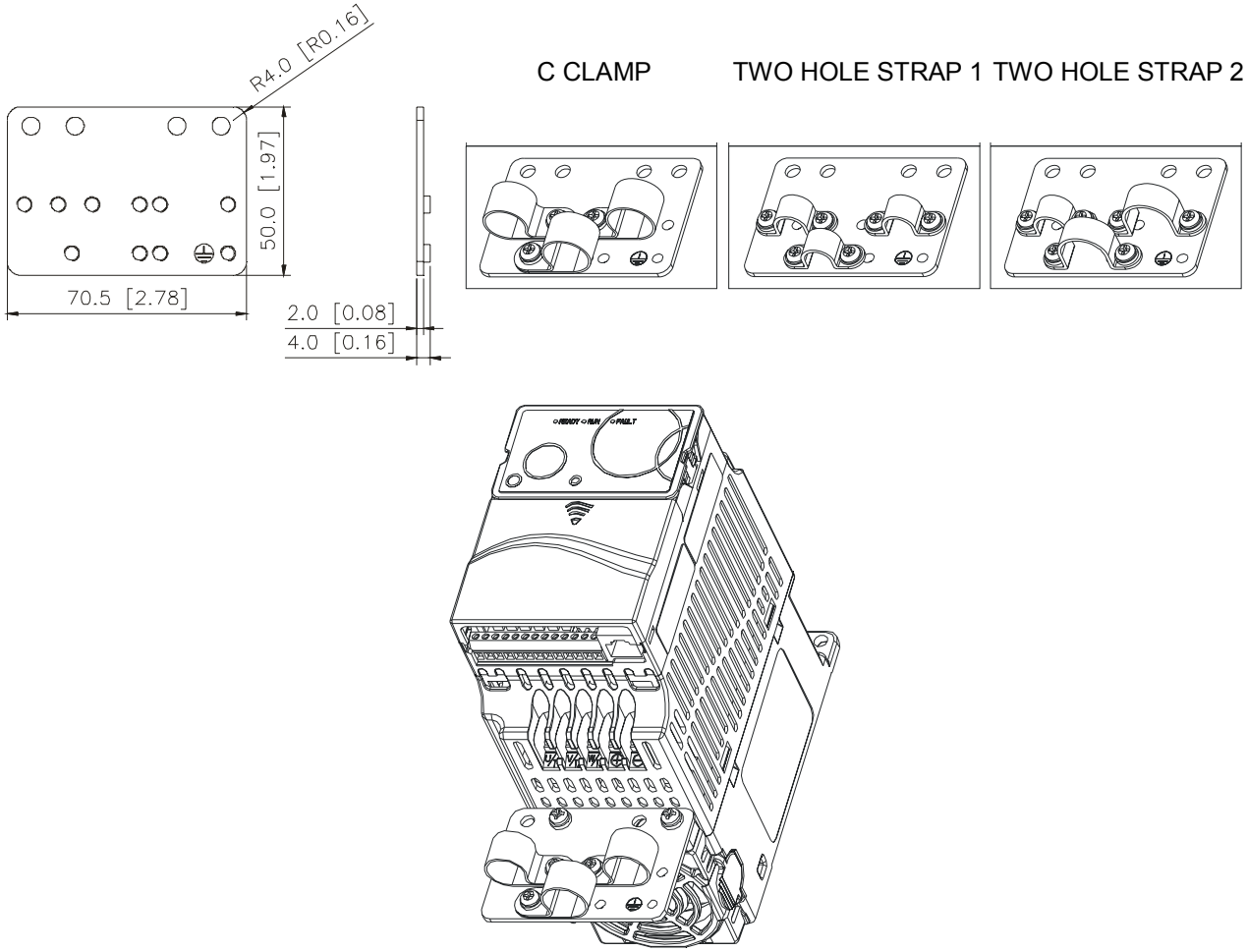

## B.10 EMI Filter

To meet EN61800-3 variable speed drive system- part 3: EMC requirements and specific test methods, category C1, C2 and C3. Users can choose the suitable filter by the following table.

| 1-phase/ 3-phase | Voltage | HP | AC Motor Drive | Frame | Deltron Filter | C3 | C2 | C1 |
|---|---|---|---|---|---|---|---|---|
| 1-phase | 110V | 0.5 | VFD004E11A | A | MDF16 | 10m | 10m | 10m |
| | | 1 | VFD007E11A | A | MDF25 | 50m | 50m | 50m |
| | 230V | 0.25 | VFD002E21A | A | MDF16 | 50m | 50m | 50m |
| | | 0.5 | VFD004E21A | A | | | | |
| | | 1 | VFD007E21A | A | | | | |
| | | 2 | VFD015E21A | B | MDF25 | 50m | 50m | Fail* |
| | | 3 | VFD022E21A | B | | | | |
| 3-phase | 230V | 2 | VFD015E23A | B | KMF310A | 100m | 100m | 25m |
| | | 20 | VFD150E23A | D | KMF3100A | 100m | 100m | 3m |
| | 460V | 0.5 | VFD004E43A | A | KMF306A | 50m | 50m | 50m |
| | | 1 | VFD007E43A | A | | | | |
| | | 2 | VFD015E43A | A | | | | |
| | | 3 | VFD022E43A | B | KMF318A | 50m | 50m | 50m |
| | | 5 | VFD037E43A | B | | | | |
| | | 7.5 | VFD055E43A | C | KMF325A | 75m | 50m | 50m |
| | | 10 | VFD075E43A | C | | | | |
| | | 15 | VFD110E43A | C | | | | |
| | | 30 | VFD220E43A | D | KMF350A | 100m | 100m | 50m |

NOTE: For model VFD022E21A and VFD015E21A, please use MIF filter to meet Category C1.

Installation

All electrical equipment, including AC motor drives, will generate high-frequency/low-frequency noise and will interfere with peripheral equipment by radiation or conduction when in operation. By using an EMI filter with correct installation, much interference can be eliminated. It is recommended to use DELTA EMI filter to have the best interference elimination performance.

We assure that it can comply with following rules when AC motor drive and EMI filter are installed and wired according to user manual:

EN61000-6-4

EN61800-3: 1996

EN55011 (1991) Class A Group 1

General precaution

1. EMI filter and AC motor drive should be installed on the same metal plate.
2. Please install AC motor drive on footprint EMI filter or install EMI filter as close as possible to the AC motor drive.
3. Please wire as short as possible.
4. Metal plate should be grounded.
5. The cover of EMI filter and AC motor drive or grounding should be fixed on the metal plate and the contact area should be as large as possible.

Choose suitable motor cable and precautions

Improper installation and choice of motor cable will affect the performance of EMI filter. Be sure to observe the following precautions when selecting motor cable.

1. Use the cable with shielding (double shielding is the best).
2. The shielding on both ends of the motor cable should be grounded with the minimum length and maximum contact area.
3. Remove any paint on metal saddle for good ground contact with the plate and shielding.

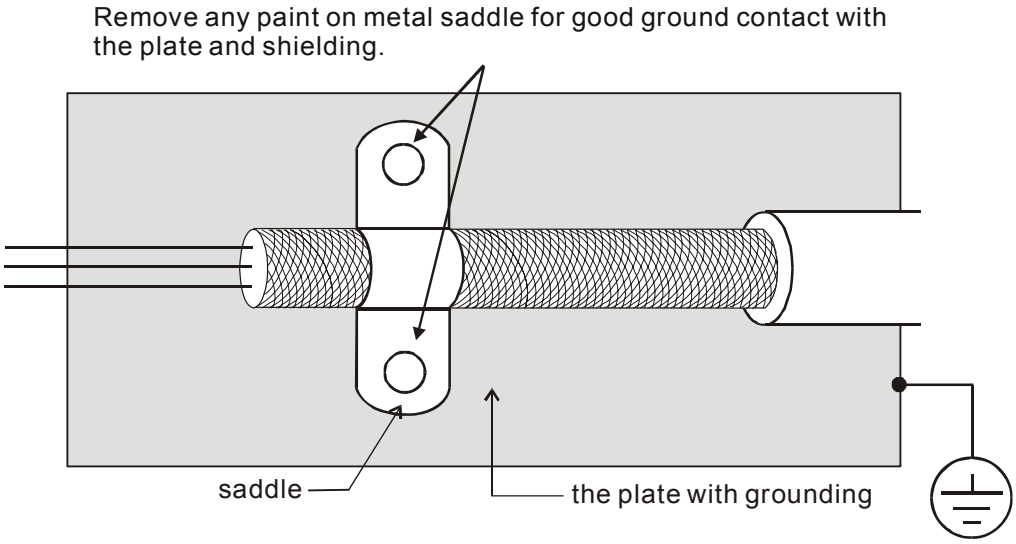


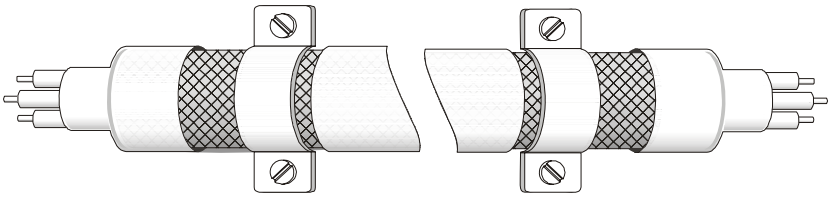

Saddle on both ends

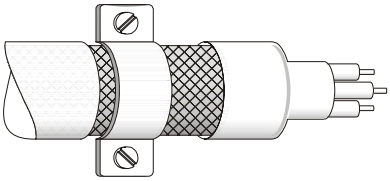

Saddle on one end

The length of motor cable

When motor is driven by an AC motor drive of PWM type, the motor terminals will experience surge voltages easily due to components conversion of AC motor drive and cable capacitance. When the motor cable is very long (especially for the 460V series), surge voltages may reduce insulation quality. To prevent this situation, please follow the rules below:

- Use a motor with enhanced insulation.
- Connect an output reactor (optional) to the output terminals of the AC motor drive
- The length of the cable between AC motor drive and motor should be as short as possible (10 to 20 m or less)
- For models 7.5hp/5.5kW and above:

| Insulation level of motor | 1000V | 1300V | 1600V |
|---|---|---|---|
| 460VAC input voltage | 66 ft (20m) | 328 ft (100m) | 1312 ft (400m) |
| 230VAC input voltage | 1312 ft (400m) | 1312 ft (400m) | 1312 ft (400m) |

Note:

When a thermal O/L relay protected by motor is used between AC motor drive and motor, it may malfunction (especially for 460V series), even if the length of motor cable is only 165 ft (50m) or less. To prevent it, please use AC reactor and/or lower the carrier frequency (Pr. 02.03 PWM carrier frequency)

Note:

Never connect phase lead capacitors or surge absorbers to the output terminals of the AC motor drive.

- If the length is too long, the stray capacitance between cables will increase and may cause leakage current. It will activate the protection of over current, increase leakage current or not insure the correction of current display. The worst case is that AC motor drive may damage.
- If more than one motor is connected to the AC motor drive, the total wiring length is the sum of the wiring length from AC motor drive to each motor.

# B.11 Fan Kit

Frames of the fan kit Unit: mm [inch]

Frame A/B

Model『MKE-AFKM』

Applicable Model
VFD002E11A/11C/11T; VFD002E21A/21C/21T;
VFD002E23A/23C/23T; VFD004E11A/11C/11T;
VFD004E21A/21C/21T; VFD004E23A/23C/23T;
VFD004E43A/43C/43T; VFD007E21A/21C/21T;
VFD007E23A/23C/23T; VFD007E43A/43C/43T;
VFD015E23A/23C/23T VFD015E43A/43C/43T;
VFD002E11P/21P/23P; VFD004E11P/21P/23P/43P;
VFD007E21P/23P/43P; VFD015E23P/43P;
VFD007E11A/11C; VFD015E21A/21C;
VFD022E21A/21C; VFD022E23A/23C;
VFD022E43A/43C;
VFD037E23A/23C; VFD037E43A/43C;

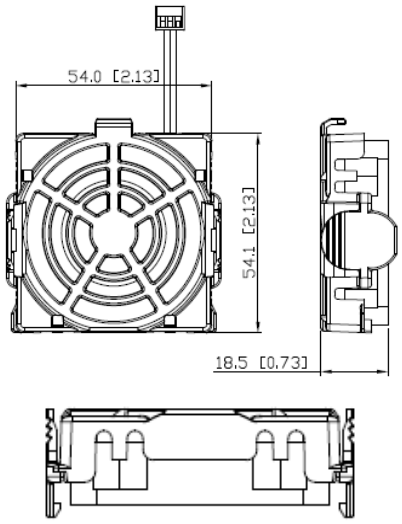


Frame C

Model『MKE-CFKM1』

Model『MKE-CFKM2』

Applicable Model
VFD055E43A/43C;

VFD075E43A/43C;

VFD110E43A/43C;
(MKE-CFKM2 only)

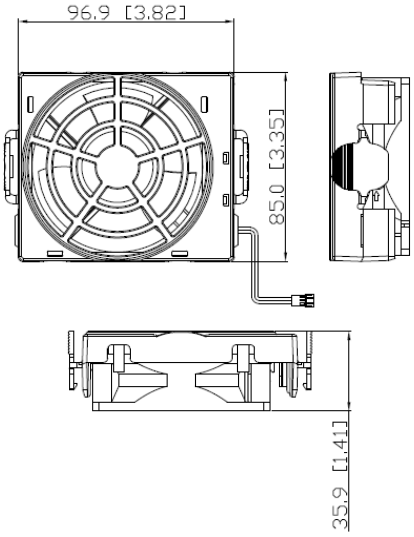


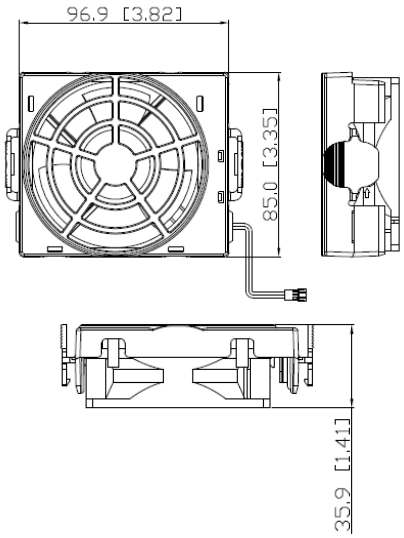


Frame D

Model『MKE-DFKM』

Applicable Model
VFD150E23A/23C; VFD150E43A43C;
VFD185E43A/43C;
VFD220E43A/43C;

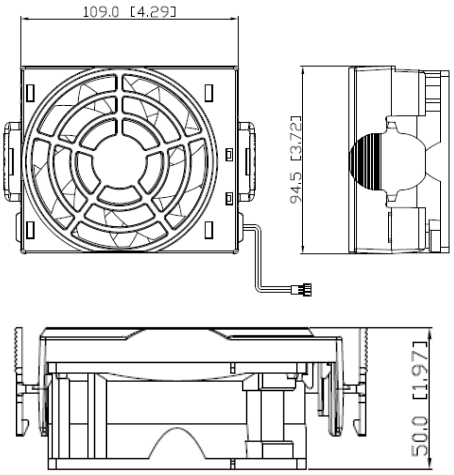


Note:
In order to make sure that fans work properly, it is recommended to verify their functions every 6 to 12 months.
It is also recommended to change module of fans every 8 years to ensure the proper function and safety of the product.

## B.12 KPC-CC01 keypad

Due to VFD-E default communication protocol is ASCII 9600, 7, N, 2, but KPC-CC01 communication protocol is RTU 19200, 8, N, 2, you need to set VFD-E communication parameters so that it can connect with KPC-CC01. Set Pr.09.00=1, 09.01=2, 09.04=3 and you can select operating functions by pressing KPC-CC01 MENU key. Please refer to CH.4 Pr.09 Group for details.

Pr.09.00 Communication Address

Pr.09.01 Transmission Speed (Baud rate)

Pr.09.04 Communication Protocol

KPC-CC01 is communicating with control board by using 255 communication station, so if the Transmission Speed is corresponding with Communication Protocol, the control board can receive packet properly, it can judge as keypad devices and communicate mutually.
Digital Keypad only can support the serial production after product series No.: xxxExxAxT205xxxx, xxxExxAxW202xxxx.
Some parameters cannot be copied by using PU06, KPC-CC01 or VFDSoft, please refer to B-5 Digital Keypad PU06 for details.

## Descriptions of Digital Keypad

KPC-CC01

Communication Interface:
RJ-45 (socket)、RS-485 interface

Installation:

- ☑ Embedded, it can flat the control box surface and front waterproof.
- ☑ You can select optional model: MKC-KPPK, the protection level is IP56; user can choose wall mounting or embedded mounting.

## Descriptions of Keypad Functions

| Key | Descriptions |
|---|---|
| RUN | Start Operation Key<br>1. It is only valid when the source of operation command is from the keypad.<br>2. It can operate the AC motor drive by the function setting and the RUN LED will be ON.<br>3. It can be pressed again and again at stop process. |
| STOP RESET | Stop Command Key. This key has the highest processing priority in any situation.<br>1. When it receives STOP command, no matter the AC motor drive is in operation or stop status, the AC motor drive needs to execute “STOP” command.<br>2. The RESET key can be used to reset the drive after the fault occurs. For those faults that can’t be reset by the RESET key, see the fault records after pressing MENU key for details. |
| FWD REV | Operation Direction Key<br>1. This key is only control the operation direction NOT for activate the drive. FWD: forward, REV: reverse.<br>2. Refer to the LED descriptions for more details. |
| ENTER | ENTER Key<br>Press ENTER and go to the next level. If it is the last level then press ENTER to execute the command. |
| ESC | ESC Key<br>ESC key function is to leave current menu and return to the last menu. It is also functioned as a return key in the sub-menu. |
| MENU | Press menu to return to main menu.<br>Menu content:<br>KPC-CC01 does not support function 1, 4, 5, and 7; only support part function of 10,11, 12, and 13.<br>1. Detail Parameter 7. Quick/Simple Setup 13. PC Link<br>2. Copy Parameter 8. Display Setup<br>3. Keypad Locked 9. Time Setup<br>4. PLC Function 10. Language Setup<br>5. Copy PLC 11. Startup Menu<br>6. Fault Record 12. Main Page |
| ^ < > v | Direction: Left/Right/Up/Down<br>1. In the numeric value setting mode, it is used to move the cursor and change the numeric value.<br>2. In the menu/text selection mode, it is used for item selection. |
| F1 F2 F3 F4 HAND AUTO | Does not support function |

## Descriptions of LED Functions

| LED | Descriptions |
|---|---|
| | Steady ON: operation indicator of the AC motor drive, including DC brake, zero speed, standby, restart after fault and speed search.<br>Blinking: drive is decelerating to stop or in the status of base block.<br>Steady OFF: drive doesn't execute the operation command |
| | Steady ON: stop indicator of the AC motor drive.<br>Blinking: drive is in the standby status.<br>Steady OFF: drive doesn't execute "STOP" command. |
| | Operation Direction LED<br>1. Green light is on, the drive is running forward.<br>2. Red light is on, the drive is running backward.<br>3. Twinkling light: the drive is changing direction. |
| CANopen ~"RUN" | RUN LED: |

| LED status | Condition/State |
|---|---|
| OFF | CANopen at initial<br>No LED |
| Blinking | CANopen at pre-operation<br> 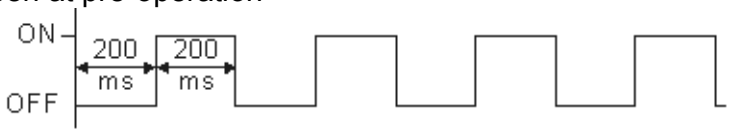 |
| Single flash | CANopen at stopped<br> 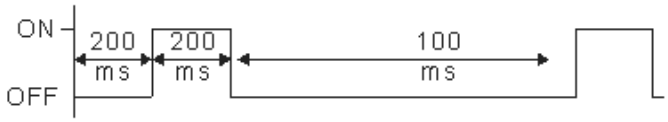 |
| ON | CANopen at operation status<br>No LED |

| | |
|---|---|
| CANopen ~"ERR" | ERR LED: |

| LED status | Condition/ State |
|---|---|
| OFF | No Error |
| Single flash | One message fail<br> 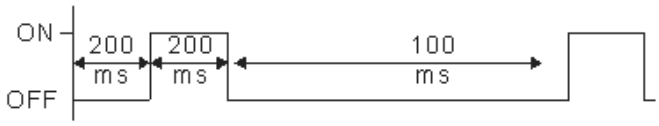 |
| Double flash | Guarding fail or heartbeat fail<br> 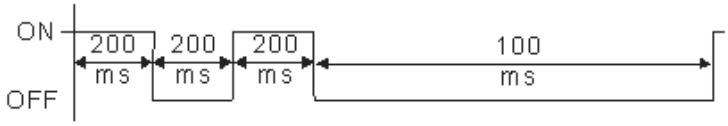 |
| Triple flash | SYNC fail<br> 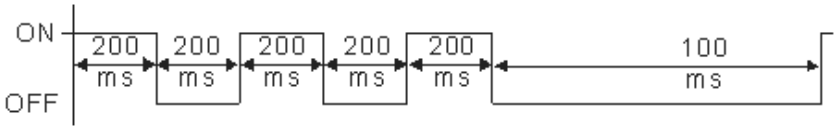 |
| ON | Bus off |

# Function of Digital Keypad KPC-CC01

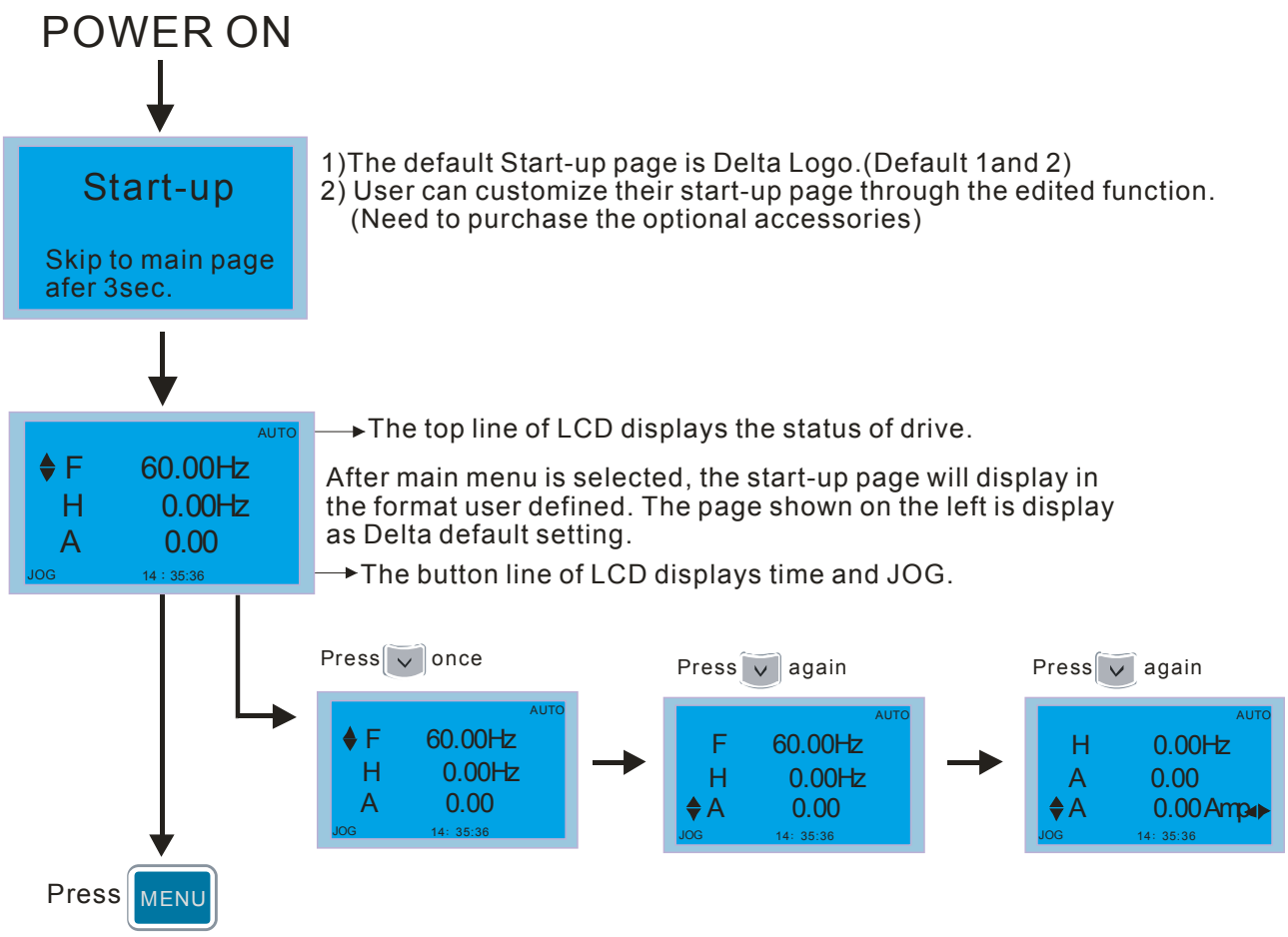


MENU

1. Detail Parameter
2. Copy Parameter
3. Keypad Locked
4. PLC Function
5. Copy PLC
6. Fault Record
7. Quick/Simple Setup
8. Display Setup
9. Time Setup
10. Language Setup
11. Start-up
12. Main page
13. PC Link

Note:

1. Startup page can only display pictures, no flash.
2. When Power ON, it will display startup page then the main page. The main page displays Delta's default setting F/H/A/U, the display order can be set by Pr.00.03 (Startup display). When the selected item is U page, use left key and right key to switch between the items, the display order of U page is set by Pr.00.04 (User display).

## Display Icon

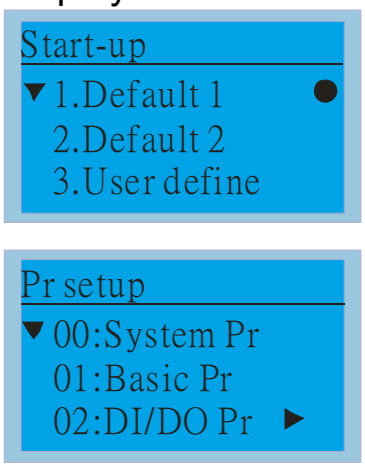


● : present setting

▼ : roll down the page for more options

Press ^ v for more options.

▶ : show complete sentence

Press < > for complete information

## Display item

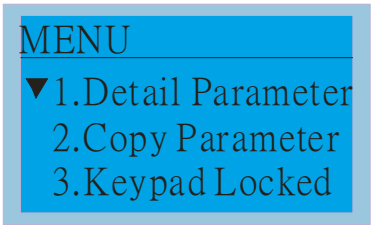


MENU
1.Detail Parameter
2.Copy Parameter
3.Keypad Locked
4.PLC Function
5. Copy PLC
6. Fault Record
7. Quick/Simple Setup
8. Display Setup
9. Time Setup
10. Language Setup
11. Start-up
12. Main page
13. PC Link

Item 1~4 are the common items for KPC-CC01 &KPC-CE01

## Detail Parameter

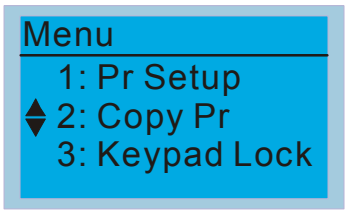


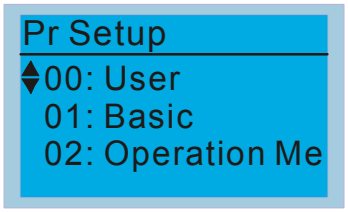


Press ENTER to select.

00 System Pr Content

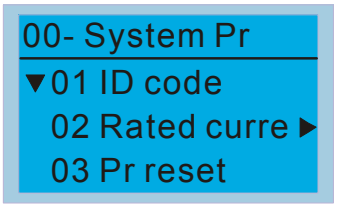


00-08 Password disable

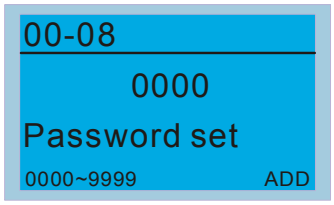


01-00 Max Output freq

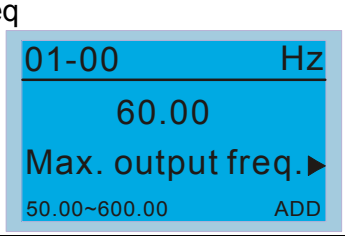


## Copy Parameter

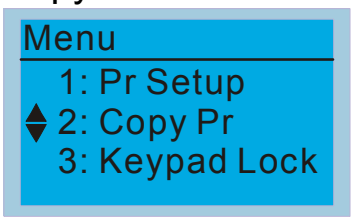


4 sets of parameters duplication.
Keypad V1.02 (contained) previous versions: it does not support self-editing file name function, and use KPC-CC01 internal date as file name directly when saving.
Keypad V1.03 (contained) later versions: you can enter file name when parameters are copying in order to distinguish by customers, and when the set is completed, it will modify date and time into the parameter copied screen (file name _ date _ time) immediately, the step process is as the following example.

Example: If you want to copy drive's parameters into KPC-CC01, you need to enter "Copy Pr" function first, select the locations (001~004) you want to save, and then press the"Enter" key.

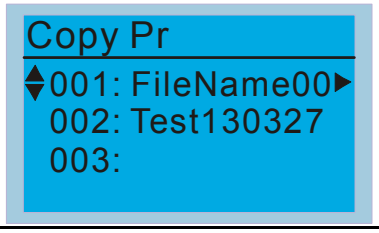


Press ENTER to select.

Select copy options

Select 2. VFD-> Keypad => Press “Enter” then enter file name setting screen(as shown below),use key to select text*1 with key to switch the location moving function.

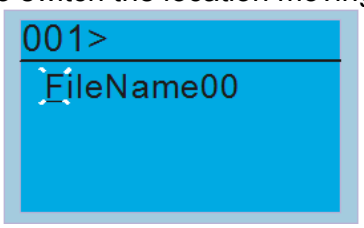


After finishing, press ENTER to save

*1: File name is setting as text patterns and defines as text (0~9,A~Z,+-*/.....).It is according to ASCII Table to scroll sequence by using UP/DOWN keys.

## Keypad Lock

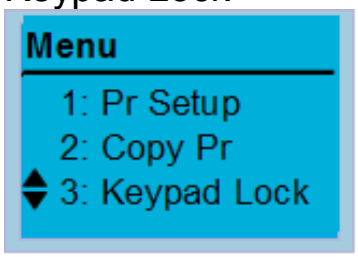


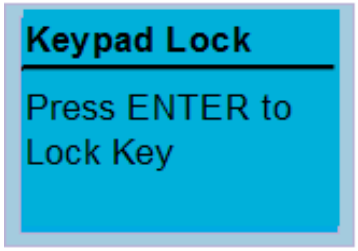


Press ENTER to lock

This function is selecting ”Keypad Lock”:
When the keypad locked, the main screen does not display lock status, if you press any button it will pop up a dialog box and showing ”Press ESC 3 sec to Unlock key”

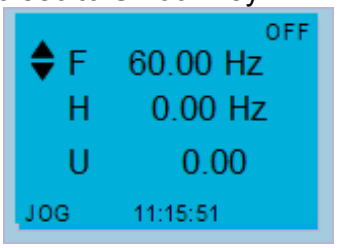


Press any key

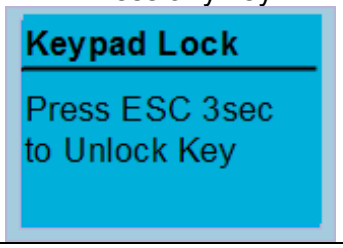


## Fault Record

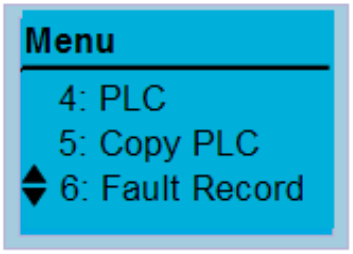


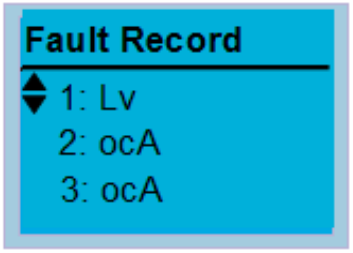


Keypad V1.02(contained) previous versions: It can accumulate 6 sets fault code.
Keypad V1.03 (contained) later versions: It can accumulate 20sets fault code.
The latest one is the unusual record from the recent date , click enter to check detailed record (Included date, time, output frequency, output current, output voltage and DC BUS voltage)
Example:

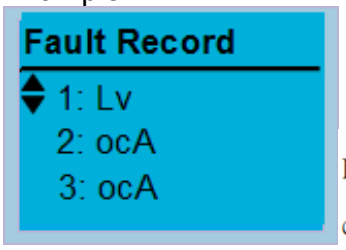


Press ENTER to view the current and voltage of the fault

Press ENTER to select.

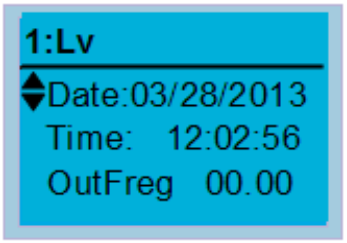


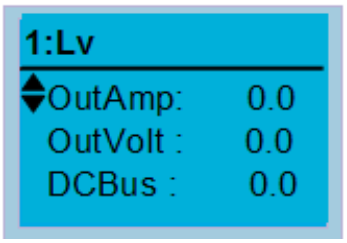


**NOTE**

This function is just only for the failure record of drive as the moment and recorded in KPC-CC01.If user put KPC-CC01 keypad to other drive randomly, it needs to pay attention to their own failure record will not lose due to replace KPC-CC01 keypad.

## Display Setup

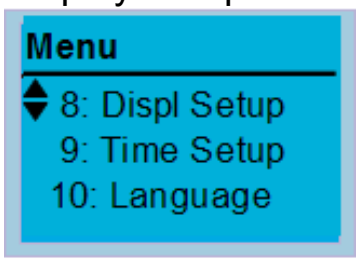


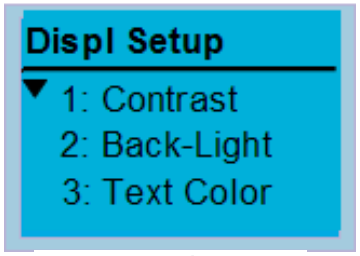


Press ENTER to enter the setting menu.

1. Contrast Adjustment

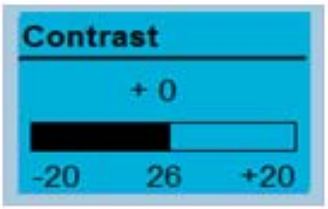


Adjust setting value

2. Back-Light Time

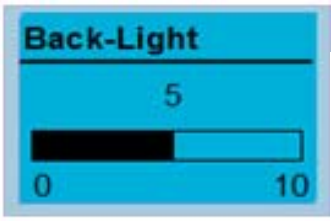


Adjust setting value

[Note]: If you want to close the backlight of failure message, you can set backlight time to 0.

3. Text Color

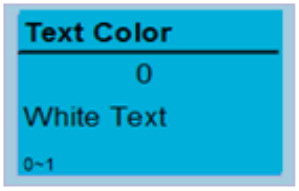


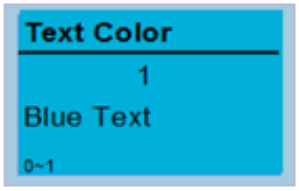


Adjust setting value

## Time Setup

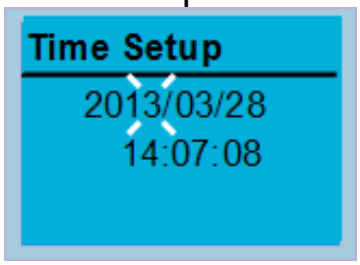


Enter time setup page, "3" will continue to blink

move to left / right

increase / decrease the value

Press ENTER to confirm.

**NOTE**

Limitations：The capacitor charging time of KPC-CC01 is around 6minutes. When the digital keypad is removed, the time setting will be in standby status for 7 days. After this period, the time needs to be reset.

## Language Setup

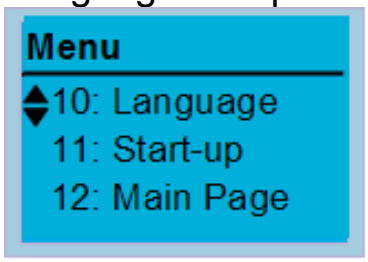

Language setting option is displayed the language fonts，you can use Up / Down keys to make a choice , then press the ENTER key to do the display language setting.
(VFD-E menu contents: 1:Pr Setup only can support English display,[Failure message only can support English display])

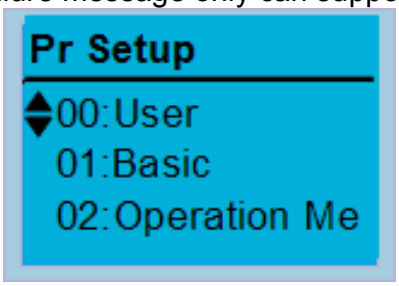


## Start-up Page Setup

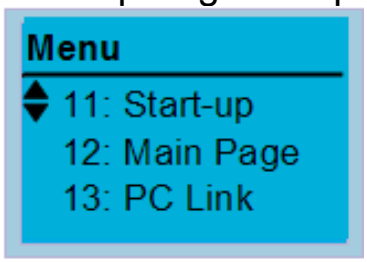


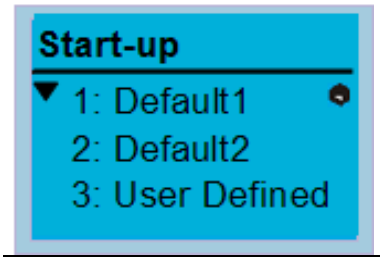


1. Default picture 1
   DELTA LOGO
2. Default picture 2
   DELTA Text
3. User Defined (VFD-E does not support this function)

## Main Page

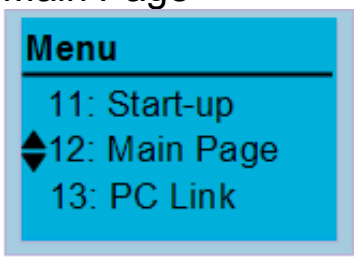


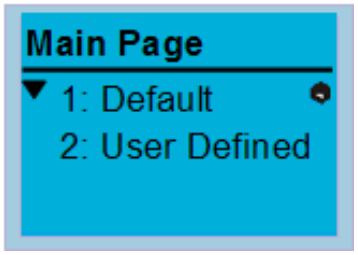


Provide “Default” and “User Defined” mode to select

Press ENTER to select.

1.Default Page

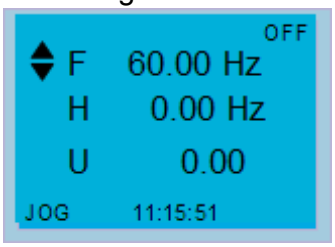


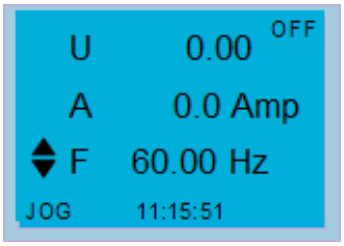


F 60.00Hz >>> H >>> U >>> A (cycle display)

2. User Defined (VFD-E does not support this function)

## PC Link

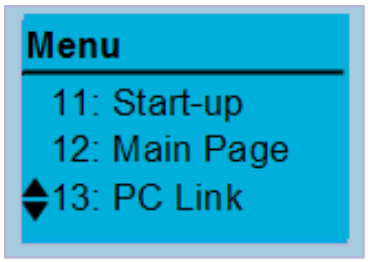


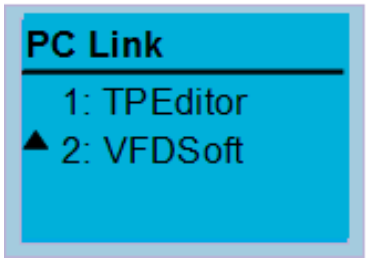


Select"2" VFDSoft and press ENTER
(VFD-E does not support TPEditor)

The function of PC Link is to establish a connection with computer via VFDSoft to upload the parameters from KPC-CC01.

1. Select VFDSoft option, enter this function page1 and choose parameter file you want to upload, press "Enter" to go to next page and wait for the communication confirmation from PC.

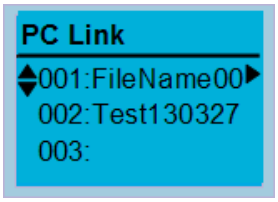


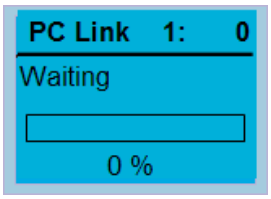


2. Open VFDSoft =>select"Parameter Manager" =>select upper right options "table".
   =>Select "Load parameter table from KPC-CC01" => there will be a "Communication Settings" window now.
   =>Please select the corresponding connection port for PC and KPC-CC01 then press "OK".
3. Upload parameters to PC via KPC-CC01=> when started the waiting page will appear=>after completing then press "MENU" back to Main Page.

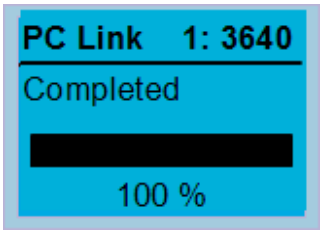

## Other display

When fault occur, the menu will display:

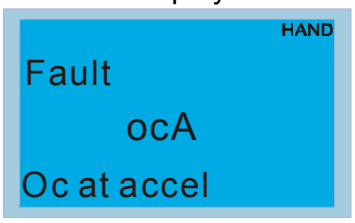


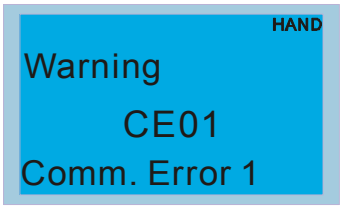


1. Press ENTER and start RESET. If still no response, please contact local distributor or return to the factory. To view the fault DC BUS voltage, output current and output voltage, press "MENU"→"Fault Record".
2. Press ENTER again, if the screen returns to main page, the fault is clear.
3. When fault or warning message appears, backlight LED will blinks until the fault or the warning is cleared.

## Optional accessory: RJ45 Extension Lead for Digital Keypad

| Part No. | Description |
|---|---|
| CBC-K3FT | RJ45 extension lead, 3 feet (approximately 0.9m) |
| CBC-K5FT | RJ45 extension lead, 5 feet (approximately 1.5 m) |
| CBC-K7FT | RJ45 extension lead, 7 feet (approximately 2.1 m) |
| CBC-K10FT | RJ45 extension lead, 10 feet (approximately 3 m) |
| CBC-K16FT | RJ45 extension lead, 16 feet (approximately 4.9 m) |

# *Appendix C: How to Select the Right AC Motor Drive*

The choice of the right AC motor drive for the application is very important and has great influence on its lifetime. If the capacity of AC motor drive is too large, it cannot offer complete protection to the motor and motor maybe damaged. If the capacity of AC motor drive is too small, it cannot offer the required performance and the AC motor drive maybe damaged due to overloading.

But by simply selecting the AC motor drive of the same capacity as the motor, user application requirements cannot be met completely. Therefore, a designer should consider all the conditions, including load type, load speed, load characteristic, operation method, rated output, rated speed, power and the change of load capacity. The following table lists the factors you need to consider, depending on your requirements.

| **Item** | | **Related Specification** | | | |
|---|---|---|---|---|---|
| | | Speed and torque characteristics | Time ratings | Overload capacity | Starting torque |
| Load type | Friction load and weight load<br>Liquid (viscous) load<br>Inertia load<br>Load with power transmission | ● | | | ● |
| Load speed and torque characteristics | Constant torque<br>Constant output<br>Decreasing torque<br>Decreasing output | ● | ● | | |
| Load characteristics | Constant load<br>Shock load<br>Repetitive load<br>High starting torque<br>Low starting torque | ● | ● | ● | ● |
| Continuous operation, Short-time operation<br>Long-time operation at medium/low speeds | | | ● | ● | |
| Maximum output current (instantaneous)<br>Constant output current (continuous) | | ● | | ● | |
| Maximum frequency, Base frequency | | ● | | | |
| Power supply transformer capacity or percentage impedance<br>Voltage fluctuations and unbalance<br>Number of phases, single phase protection<br>Frequency | | | | ● | ● |
| Mechanical friction, losses in wiring | | | | ● | ● |
| Duty cycle modification | | | ● | | |

## C.1 Capacity Formulas

**1. When one AC motor drive operates one motor**

The starting capacity should be less than 1.5x rated capacity of AC motor drive

The starting capacity=

$$\frac{k \times N}{973 \times \eta \times \cos\varphi}\left(T_L + \frac{GD^2}{375} \times \frac{N}{t_A}\right) \leq 1.5 \times the_capacity_of_AC_motor_drive(kVA)$$

**2. When one AC motor drive operates more than one motor**

2.1 The starting capacity should be less than the rated capacity of AC motor drive

- **Acceleration time ≦60 seconds**

The starting capacity=

$$\frac{k \times N}{\eta \times \cos\varphi}\left[n_T + n_S(k_{S-1})\right] = P_{C1}\left[1 + \frac{n_S}{n_T}(k_{S-1})\right] \leq 1.5 \times the_capacity_of_AC_motor_drive(kVA)$$

- **Acceleration time ≧60 seconds**

The starting capacity=

$$\frac{k \times N}{\eta \times \cos\varphi}\left[n_T + n_S(k_{S-1})\right] = P_{C1}\left[1 + \frac{n_S}{n_T}(k_{S-1})\right] \leq the_capacity_of_AC_motor_drive(kVA)$$

2.2 The current should be less than the rated current of AC motor drive(A)

- **Acceleration time ≦60 seconds**

$$n_T + I_M\left[1 + \frac{n_S}{n_T}(k_S - 1)\right] \leq 1.5 \times the_rated_current_of_AC_motor_drive(A)$$

- **Acceleration time ≧60 seconds**

$$n_T + I_M\left[1 + \frac{n_S}{n_T}(k_S - 1)\right] \leq the_rated_current_of_AC_motor_drive(A)$$

2.3 When it is running continuously

- **The requirement of load capacity should be less than the capacity of AC motor drive(kVA)**

  **The requirement of load capacity=**

$$\frac{k \times P_M}{\eta \times \cos\varphi} \leq the_capacity_of_AC_motor_drive(kVA)$$

- **The motor capacity should be less than the capacity of AC motor drive**

$$k \times \sqrt{3} \times V_M \times I_M \times 10^{-3} \leq the_capacity_of_AC_motor_drive(kVA)$$

- **The current should be less than the rated current of AC motor drive(A)**

$$k \times I_M \leq the_rated_current_of_AC_motor_drive(A)$$

***Symbol explanation***

| | |
|---|---|
| $P_M$ | : Motor shaft output for load (kW) |
| $\eta$ | : Motor efficiency (normally, approx. 0.85) |
| $\cos\varphi$ | : Motor power factor (normally, approx. 0.75) |
| $V_M$ | : Motor rated voltage(V) |
| $I_M$ | : Motor rated current(A), for commercial power |
| $k$ | : Correction factor calculated from current distortion factor (1.05-1.1, depending on PWM method) |
| $P_{C1}$ | : Continuous motor capacity (kVA) |
| $k_S$ | : Starting current/rated current of motor |
| $n_T$ | : Number of motors in parallel |
| $n_S$ | : Number of simultaneously started motors |
| $GD^2$ | : Total inertia ($GD^2$) calculated back to motor shaft (kg $m^2$) |
| $T_L$ | : Load torque |
| $t_A$ | : Motor acceleration time |
| N | : Motor speed |

## C.2 General Precaution

**Selection Note**

1. When the AC Motor Drive is connected directly to a large-capacity power transformer (600kVA or above) or when a phase lead capacitor is switched, excess peak currents may occur in the power input circuit and the converter section may be damaged. To avoid this, use an AC input reactor (optional) before AC Motor Drive mains input to reduce the current and improve the input power efficiency.
2. When a special motor is used or more than one motor is driven in parallel with a single AC Motor Drive, select the AC Motor Drive current ≥1.25x(Sum of the motor rated currents).
3. The starting and accel./decel. characteristics of a motor are limited by the rated current and the overload protection of the AC Motor Drive. Compared to running the motor D.O.L. (Direct On-Line), a lower starting torque output with AC Motor Drive can be expected. If higher starting torque is required (such as for elevators, mixers, tooling machines, etc.) use an AC Motor Drive of higher capacity or increase the capacities for both the motor and the AC Motor Drive.
4. When an error occurs on the drive, a protective circuit will be activated and the AC Motor Drive output is turned off. Then the motor will coast to stop. For an emergency stop, an external mechanical brake is needed to quickly stop the motor.

**Parameter Settings Note**

1. The AC Motor Drive can be driven at an output frequency up to 400Hz (less for some models) with the digital keypad. Setting errors may create a dangerous situation. For safety, the use of the upper limit frequency function is strongly recommended.
2. High DC brake operating voltages and long operation time (at low frequencies) may cause overheating of the motor. In that case, forced external motor cooling is recommended.
3. Motor accel./decel. time is determined by motor rated torque, load torque, and load inertia.
4. If the stall prevention function is activated, the accel./decel. time is automatically extended to a length that the AC Motor Drive can handle. If the motor needs to decelerate within a certain time with high load inertia that can’t be handled by the AC Motor Drive in the

required time, either use an external brake resistor and/or brake unit, depending on the model, (to shorten deceleration time only) or increase the capacity for both the motor and the AC Motor Drive.

## C.3 How to Choose a Suitable Motor

**Standard motor**

When using the AC Motor Drive to operate a standard 3-phase induction motor, take the following precautions:

1. The energy loss is greater than for an inverter duty motor.
2. Avoid running motor at low speed for a long time. Under this condition, the motor temperature may rise above the motor rating due to limited airflow produced by the motor's fan. Consider external forced motor cooling.
3. When the standard motor operates at low speed for long time, the output load must be decreased.
4. The load tolerance of a standard motor is as follows:

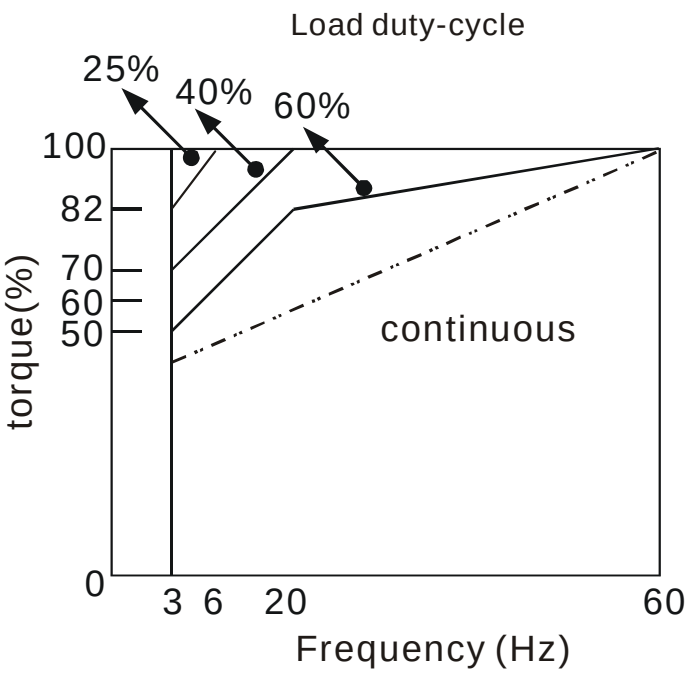


5. If 100% continuous torque is required at low speed, it may be necessary to use a special inverter duty motor.
6. Motor dynamic balance and rotor endurance should be considered once the operating speed exceeds the rated speed (60Hz) of a standard motor.

7. Motor torque characteristics vary when an AC Motor Drive instead of commercial power supply drives the motor. Check the load torque characteristics of the machine to be connected.
8. Because of the high carrier frequency PWM control of the VFD series, pay attention to the following motor vibration problems:

- **Resonant mechanical vibration: anti-vibration (damping) rubbers should be used to mount equipment that runs at varying speed.**
- **Motor imbalance: special care is required for operation at 50 or 60 Hz and higher frequency.**
- **To avoid resonances, use the Skip frequencies.**

9. The motor fan will be very noisy when the motor speed exceeds 50 or 60Hz.

**Special motors:**

1. Pole-changing (Dahlander) motor:
   The rated current is differs from that of a standard motor. Please check before operation and select the capacity of the AC motor drive carefully. When changing the pole number the motor needs to be stopped first. If over current occurs during operation or regenerative voltage is too high, please let the motor free run to stop (coast).
2. Submersible motor:
   The rated current is higher than that of a standard motor. Please check before operation and choose the capacity of the AC motor drive carefully. With long motor cable between AC motor drive and motor, available motor torque is reduced.
3. Explosion-proof (Ex) motor:
   Needs to be installed in a safe place and the wiring should comply with the (Ex) requirements. Delta AC Motor Drives are not suitable for (Ex) areas with special precautions.
4. Gear reduction motor:
   The lubricating method of reduction gearbox and speed range for continuous operation will be different and depending on brand. The lubricating function for operating long time at low speed and for high-speed operation needs to be considered carefully.
5. Synchronous motor:
   The rated current and starting current are higher than for standard motors. Please check before operation and choose the capacity of the AC motor drive carefully. When the AC

motor drive operates more than one motor, please pay attention to starting and changing the motor.

**Power Transmission Mechanism**

Pay attention to reduced lubrication when operating gear reduction motors, gearboxes, belts and chains, etc. over longer periods at low speeds. At high speeds of 50/60Hz and above, lifetime reducing noises and vibrations may occur.

**Motor torque**

The torque characteristics of a motor operated by an AC motor drive and commercial mains power are different.

Below you'll find the torque-speed characteristics of a standard motor (4-pole, 15kW):

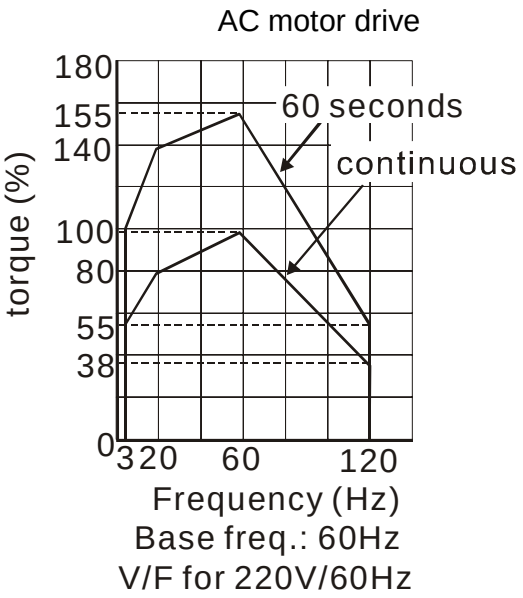


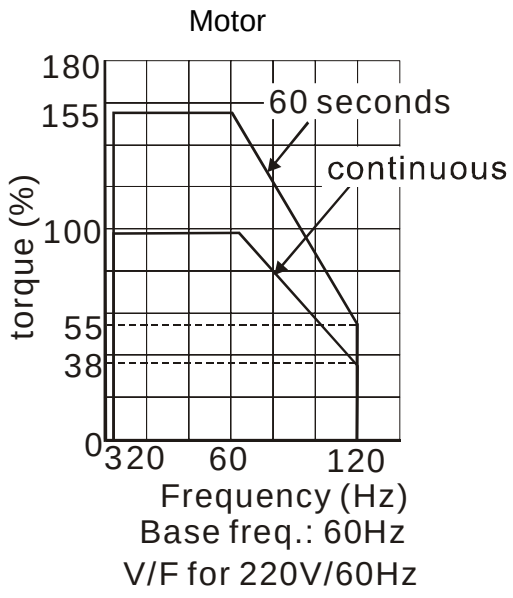


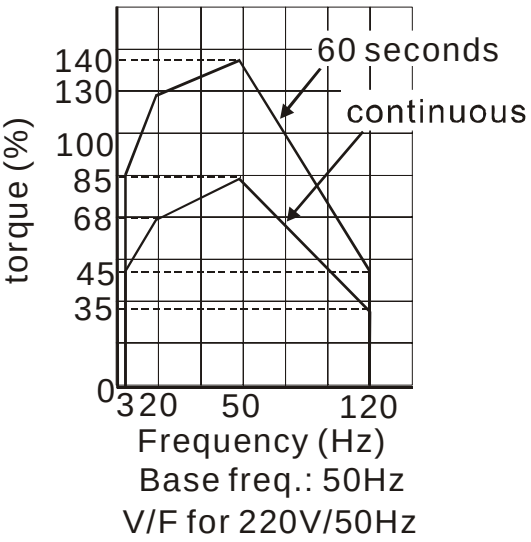


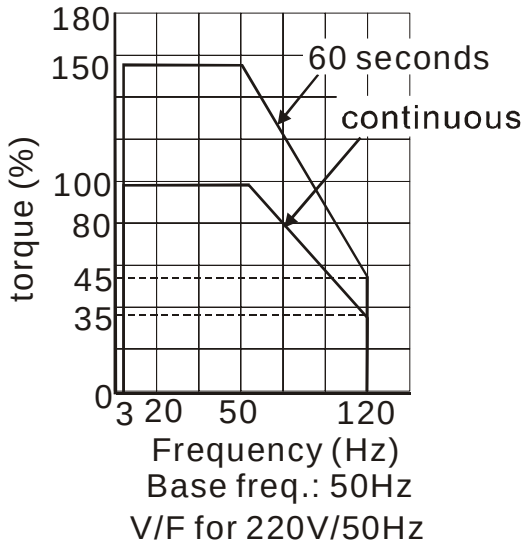

# Appendix D: How to Use PLC Function

※ **This function is NOT for VFD*E*C models.**

## D.1 PLC Overview

### D.1.1 Introduction

The PLC function built in the VFD-E provides following commands: WPLSoft, basic commands and application commands. The operation methods are the same as Delta DVP-PLC series.

### D.1.2 Ladder Diagram Editor – WPLSoft

WPLSoft is a program editor of Delta DVP-PLC series and VFD-E series for WINDOWS. Besides general PLC program planning and general WINDOWS editing functions, such as cut, paste, copy, multi-windows, WPLSoft also provides various Chinese/English comment editing and other special functions (e.g. register editing, settings, the data readout, the file saving, and contacts monitor and set, etc.).
Following is the system requirement for WPLSoft:

| Item | System Requirement |
|---|---|
| Operation System | Windows 95/98/2000/NT/ME/XP |
| CPU | Pentium 90 and above |
| Memory | 16MB and above (32MB and above is recommended) |
| Hard Disk | Capacity: 50MB and above<br>CD-ROM (for installing WPLSoft) |
| Monitor | Resolution: 640×480, 16 colors and above,<br>It is recommended to set display setting of Windows to 800×600. |
| Mouse | General mouse or the device compatible with Windows |
| Printer | Printer with Windows driver |
| RS-485 port | At least one of RS485 port can be connected to PLC |

## D.2 Start-up

### D.2.1 The Steps for PLC Execution

Please operate PLC function by the following five steps.

1. Switch the mode to PLC2 for program download/upload:

   A. Go to “PLC0” page by pressing the MODE key

   B. Change to “PLC2” by pressing the “UP” key and then press the “ENTER” key after confirmation

   C. If succeeded, “END” is displayed and back to “PLC2” after one or two seconds.

Disable | Run PLC | Read/write PLC program into AC drives

**NOTE**

- If PLC is first time used: it will show PLFF or PLor warning when the program hasn’t been downloaded from PLC Ladder to PLC.
- If PLC has been activated: after downloading program from PLC Ladder to PLC, it will show Plod, PLdA or PLFn if the modified program make used D or M out of range or adding new command.
- If PLC has been reset, it may show PLFF

2. Connection: Please connect RJ-45 of AC motor drive to computer via RS485-to-RS232 converter.

3. Run the program. The PLC status will always be PLC2, even if the AC motor drive is switched off.

   There are three ways to operate PLC:

   A. In “PLC1” page: execute PLC program.

   B. In “PLC2” page: execute/stop PLC program by using WPL software.

   C. After setting multi-function input terminals (MI3 to MI9) to 23 (RUN/STOP PLC), it will display “PLC1” for executing PLC when the terminal is ON. It will display “PLC0” to stop PLC program when terminals are OFF.

**NOTE**

When external terminals are set to 23 and the terminal is ON, it cannot use keypad to change PLC mode. Moreover, when it is PLC2, you cannot execute PLC program by external terminals.

**NOTE**

When power on after power off, the PLC status will be in “PLC1”.

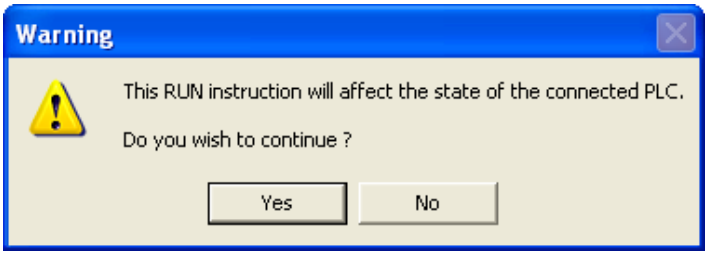


4. When you are in “PLC2”, please remember to change to “PLC1” when finished to prevent anyone modifying PLC program.

**NOTE**

When output/input terminals (MI1~MI9, Relay1~Relay 4, MO1~MO4) are used in PLC program, they cannot be used in other places. For example, When Y0 in PLC program is activated, the corresponding output terminals Relay (RA/RB/RC) will be used. At this moment, parameter 03.00 setting will be invalid. Because the terminal has been used by PLC.

**NOTE**

The PLC corresponding input points for MI1 to MI6 are X0 to X5. When extension card are added, the extension input points will be numbered from X06 and output points will start from Y2 as shown in chapter D.2.2.

## D.2.2 Device Reference Table

| Device | X | | | | | | | | | | | |
|---|---|---|---|---|---|---|---|---|---|---|---|---|
| ID | 0 | 1 | 2 | 3 | 4 | 5 | 6 | 7 | 10 | 11 | 12 | 13 |
| Terminals of AC Drives | MI1 | MI2 | MI3 | MI4 | MI5 | MI6 | -- | -- | -- | -- | -- | -- |
| 3IN/3OUT Card (EME-D33A) ( D1022 = 6) | -- | -- | -- | -- | -- | -- | MI7 | MI8 | MI9 | -- | -- | -- |
| 6IN 110VAC card (EME-D611A) ( D1022 = 8) | -- | -- | -- | -- | -- | -- | MI1 | MI2 | MI3 | MI4 | MI5 | MI6 |

| Device | Y |
|---|---|

| ID | 0 | 1 | 2 | 3 | 4 |
|---|---|---|---|---|---|
| Terminals of AC Drives | RY | MO1 | -- | -- | -- |
| Relay Card-2C (EME-DR2CA) | -- | -- | RY2 | RY3 | -- |
| Relay Card-3A (EME-R3AA) | -- | -- | RY2 | RY3 | RY4 |
| 3IN/3OUT Card (EME-D33A) | -- | -- | MO2 | MO3 | MO4 |

## D.2.3 WPLSoft Installation

See Delta's website for WPLSoft editing software:

http://www.delta.com.tw/product/em/download/download_main.asp?act=3&pid=1&cid=1&tpid=3

## D.2.4 Program Writing

After completing installation, the WPLSoft program will be installed in the designated subfolder "C:\Program Files\Delta Industrial Automation\WPLSoft x.xx." The editing software can now be run by clicking on the WPL icon using the mouse.

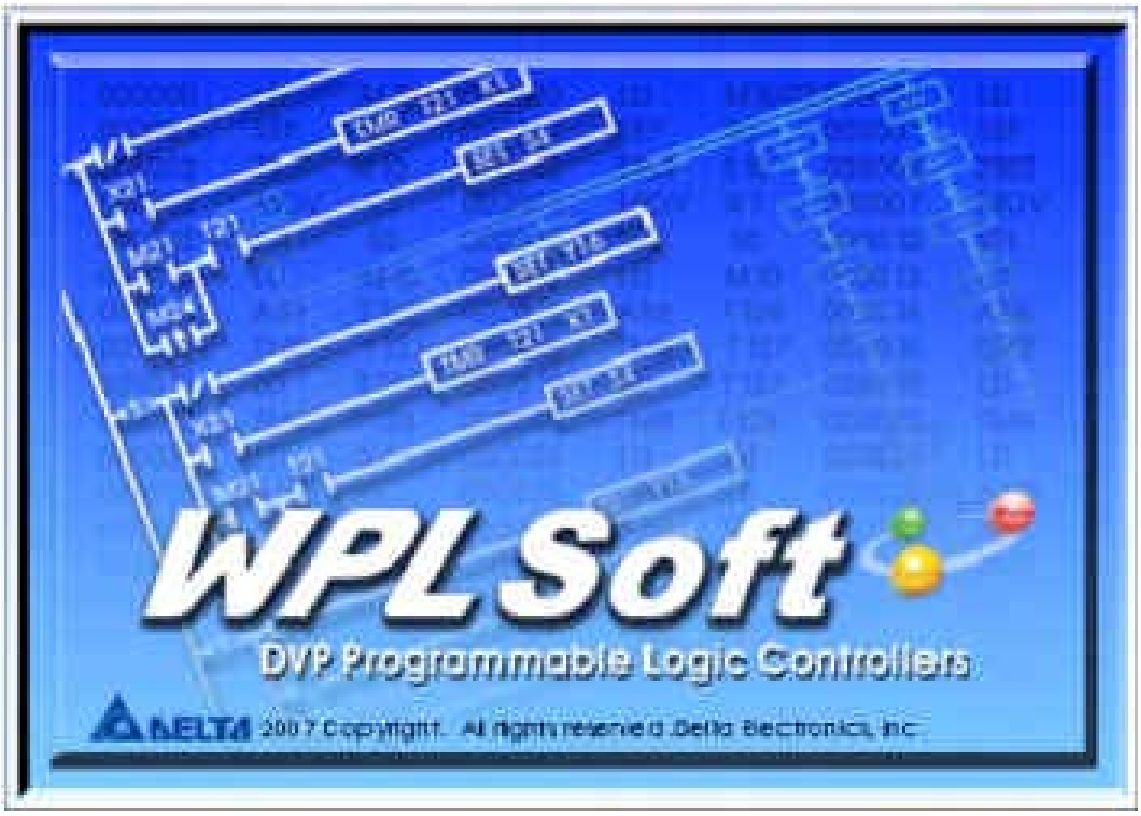

The WPL editing window will appear after 3 seconds (see figure below). When running WPLSoft for the first time, before "New file" has been used, only the "File (F)," "Communications (C)," View (V)," "Options (O)," and "Help (H)" columns will appear on the function toolbar.

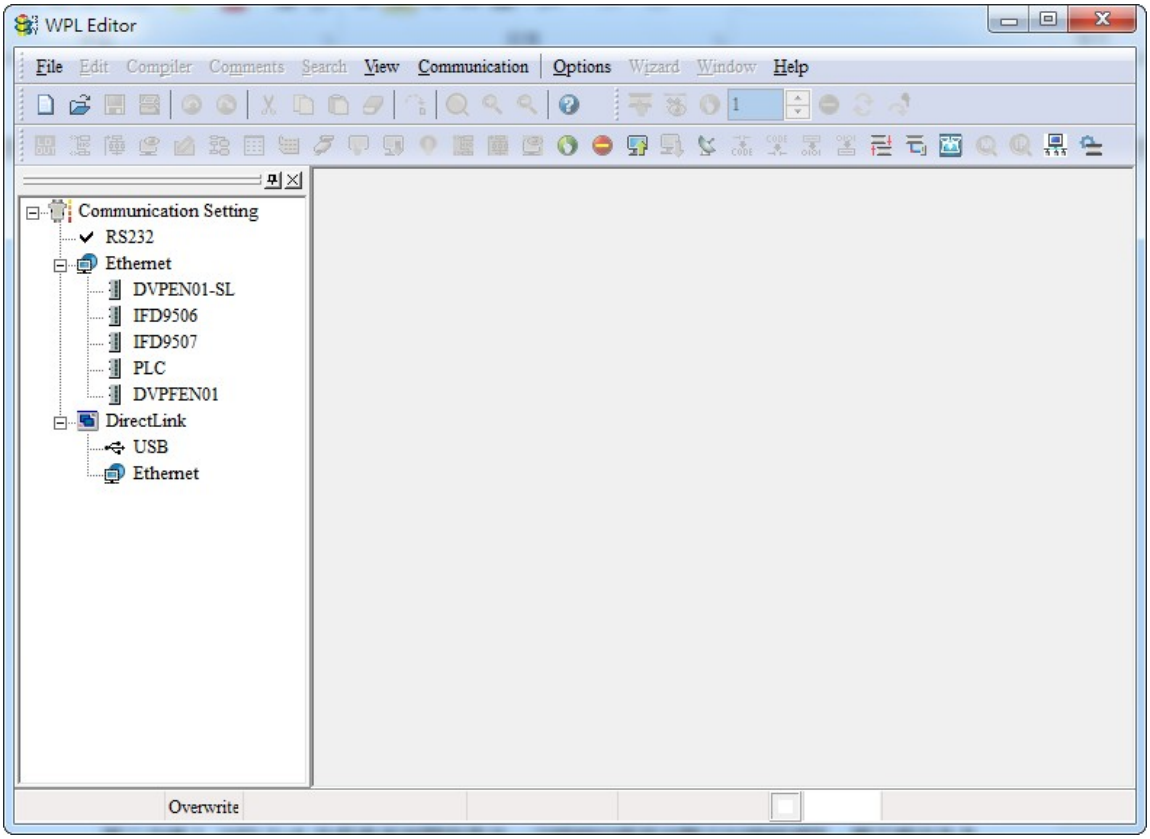


After running WPLSoft for the second time, the last file edited will open and be displayed in the editing window. The following figure provides an explanation of the WPLSoft editing software window:

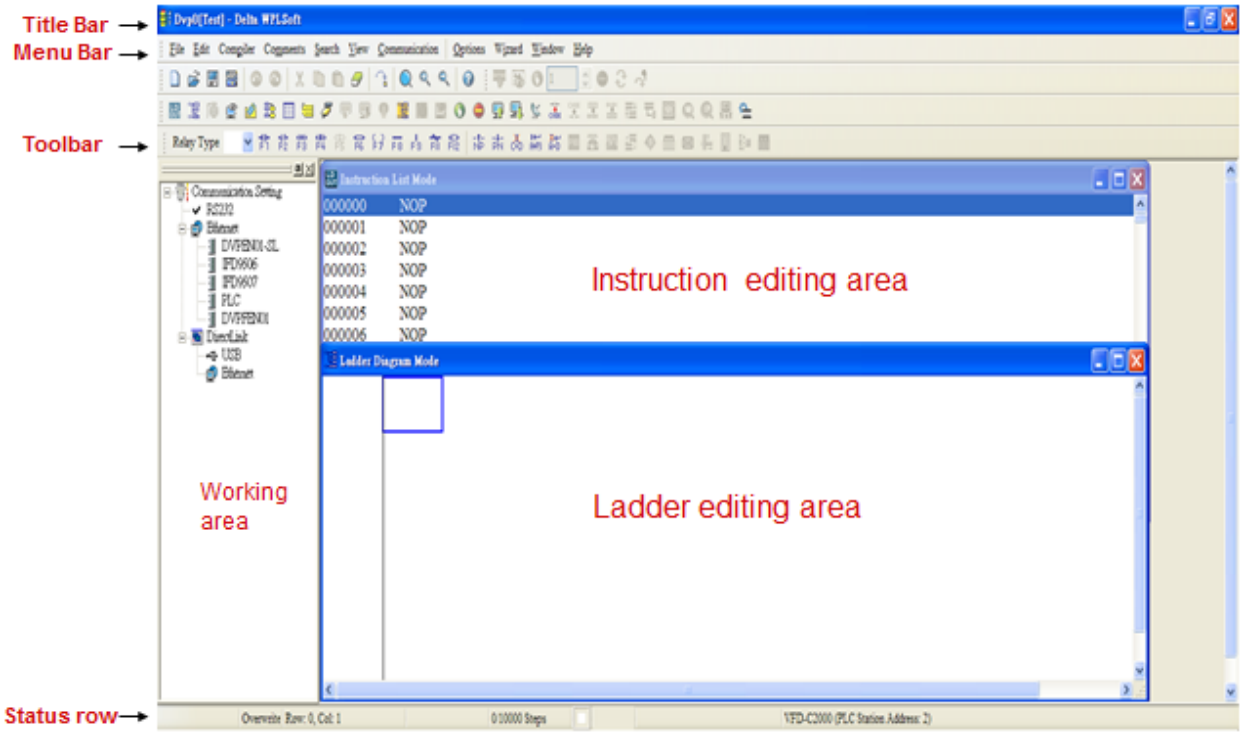

Click on the icon on the toolbar in the upper left part of the screen: opens new file (Ctrl+N)

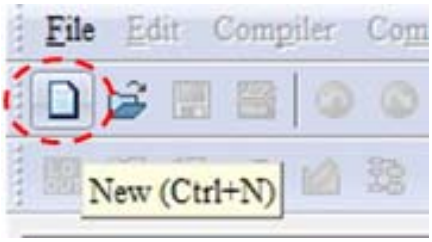


You can also use "File (F)"=> New file (N) (Ctrl+N)

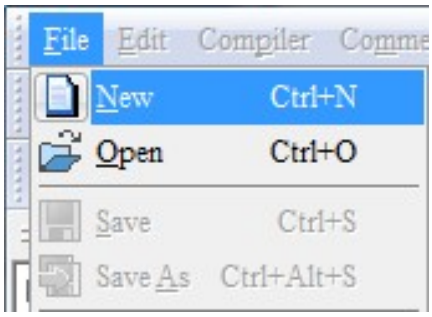


The "Device settings" window will appear after clicking. You can now enter the project title and filename, and select the device and communication settings to be used

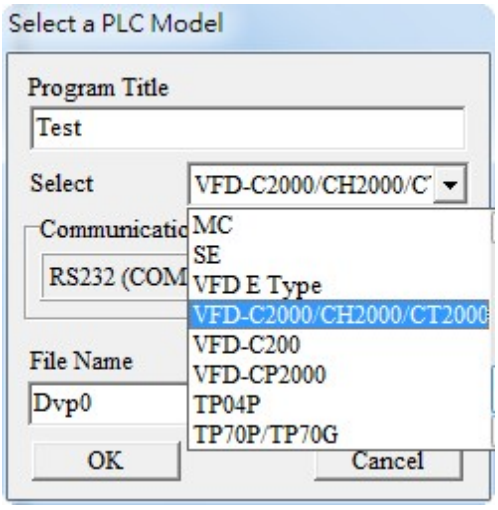


Communications settings: Perform settings in accordance with the desired communications method

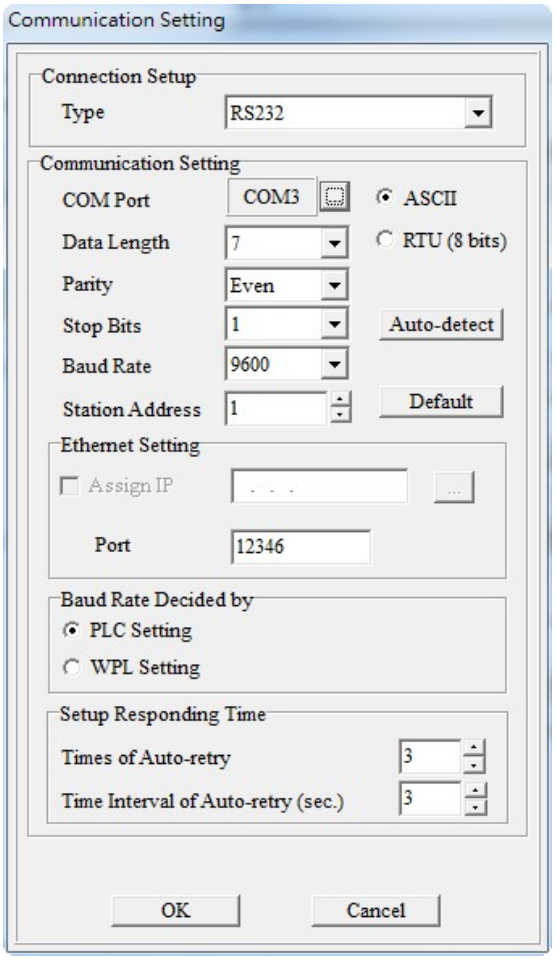


Press Confirm after completing settings and begin program editing. There are two program editing methods; you can choose whether to perform editing in the command mode or the ladder diagram mode.

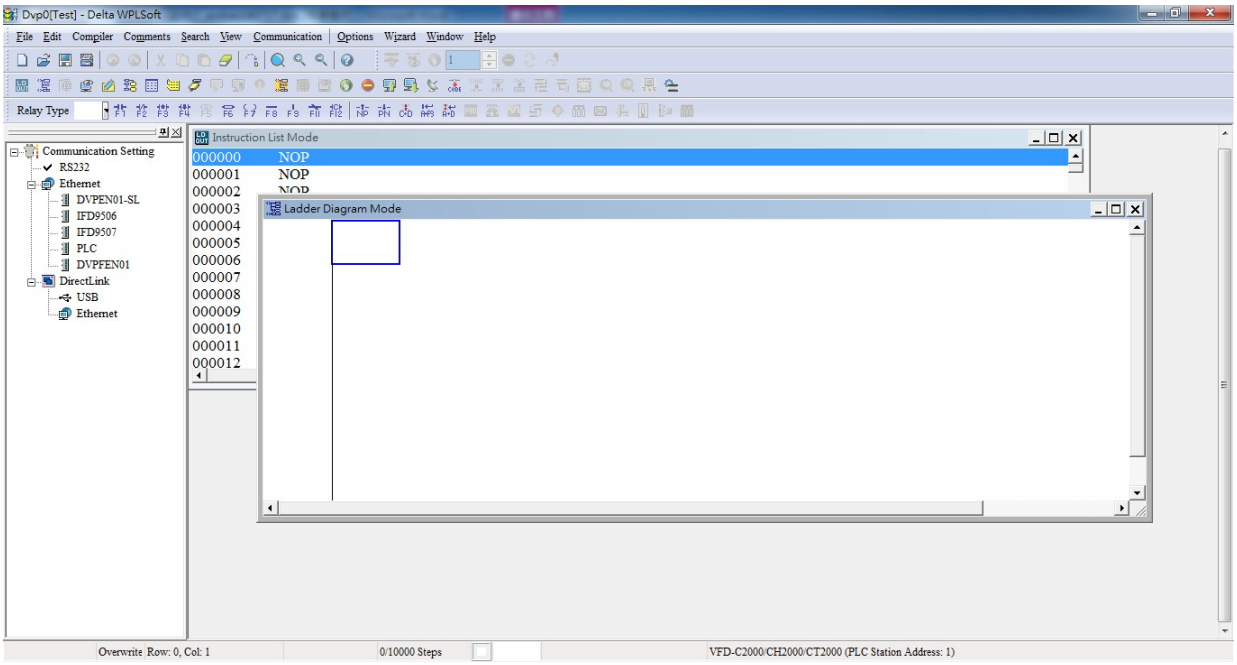


In ladder diagram mode, you can perform program editing using the buttons on the function icon row

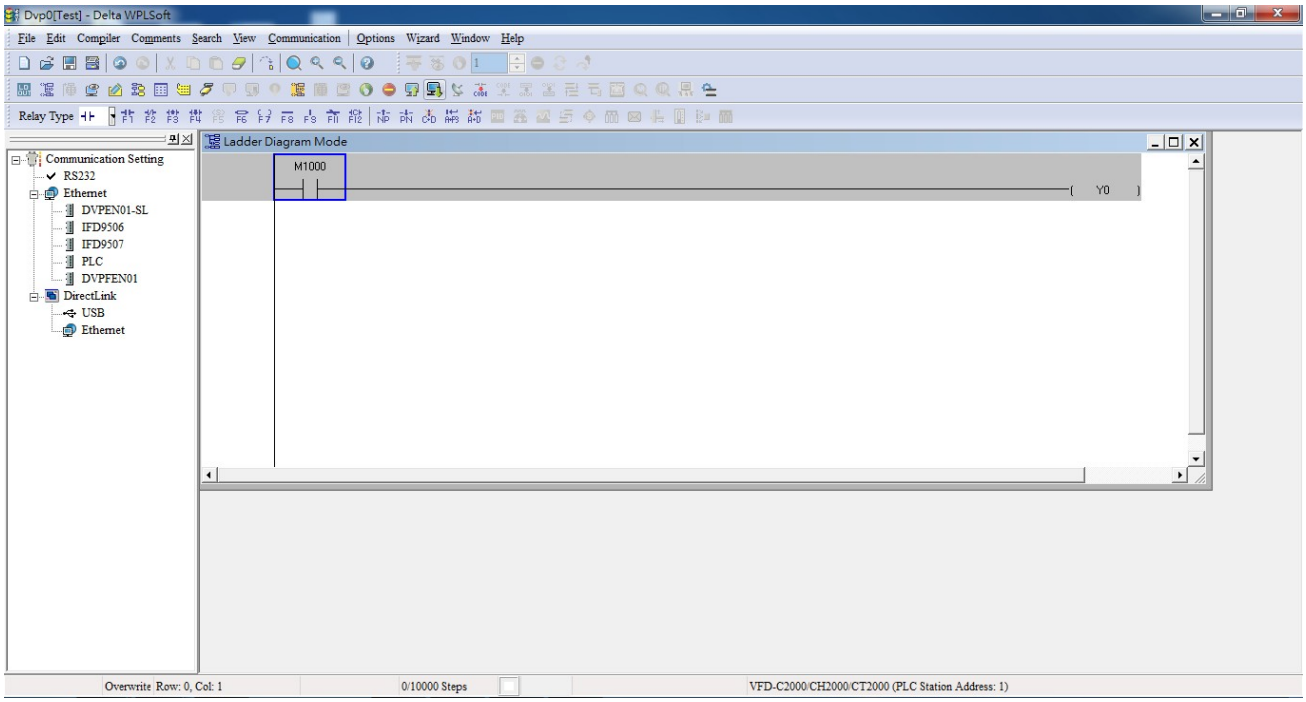


## Basic Operation

Example: Input the ladder diagram in the following figure

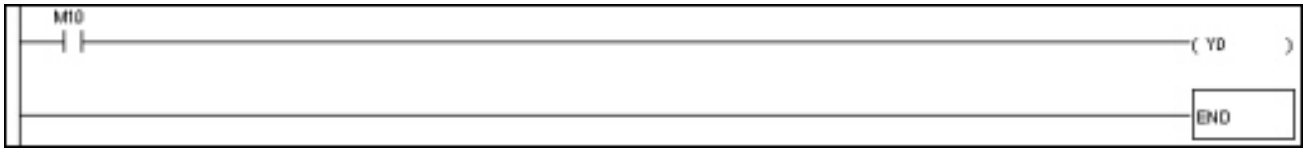


Mouse operation and keyboard function key (F1 to F12) operation

1. The following screen will appear after a new file has been established:

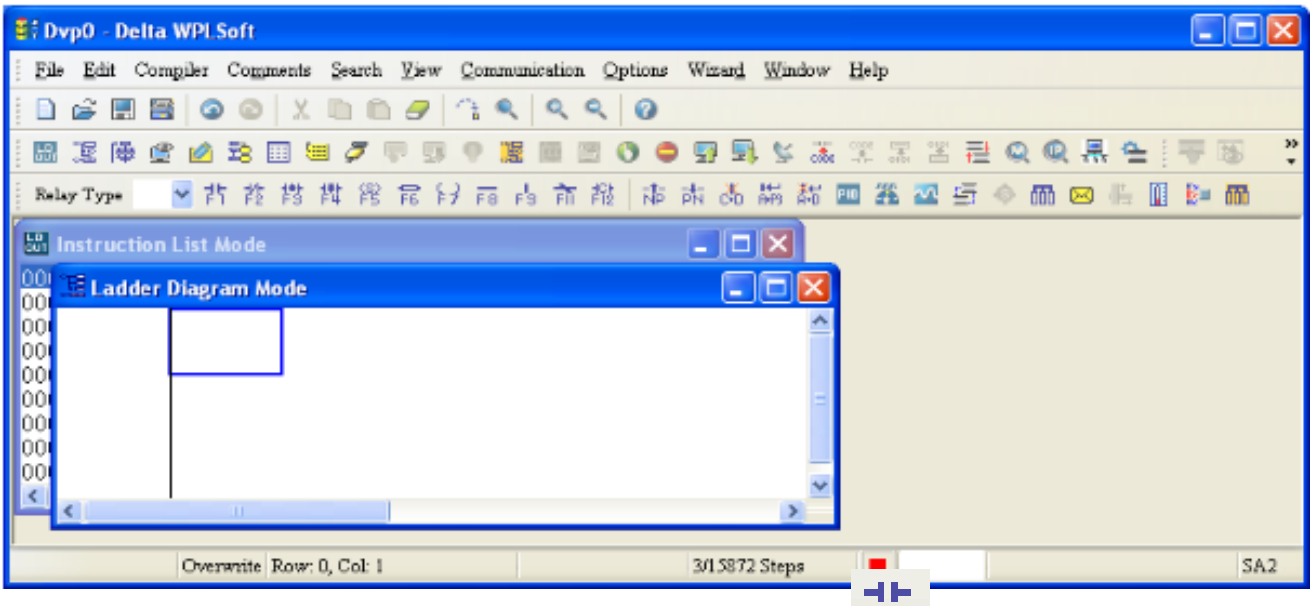


2. Use the mouse to click on the always-open switch icon or press the function key F1:

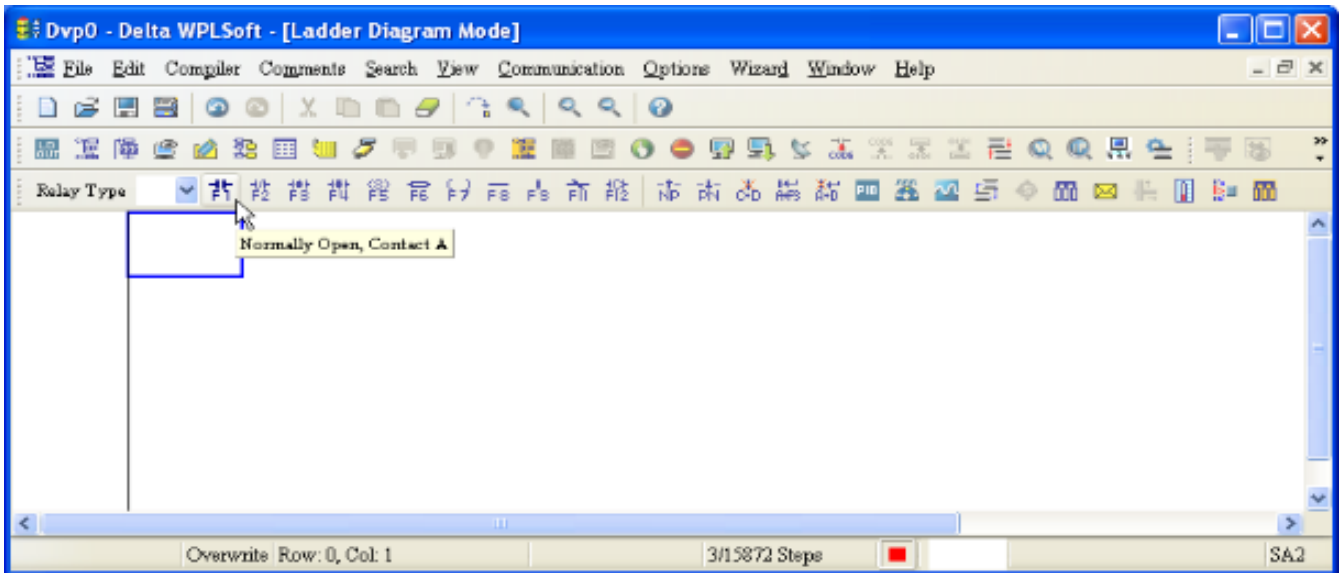


3. After the name of the input device and the comment dialog box have appeared, the device name (such as "M"), device number (such as "10"), and input comments (such as "auxiliary contact") can be selected; press the Confirm button when finished.

4. Click on the output coil icon or press function key F7. After the name of the input device and the comment dialog box have appeared, the device name (such as "Y"), device number (such as "0"), and input comments (such as "output coil") can be selected; press the Confirm button when finished.

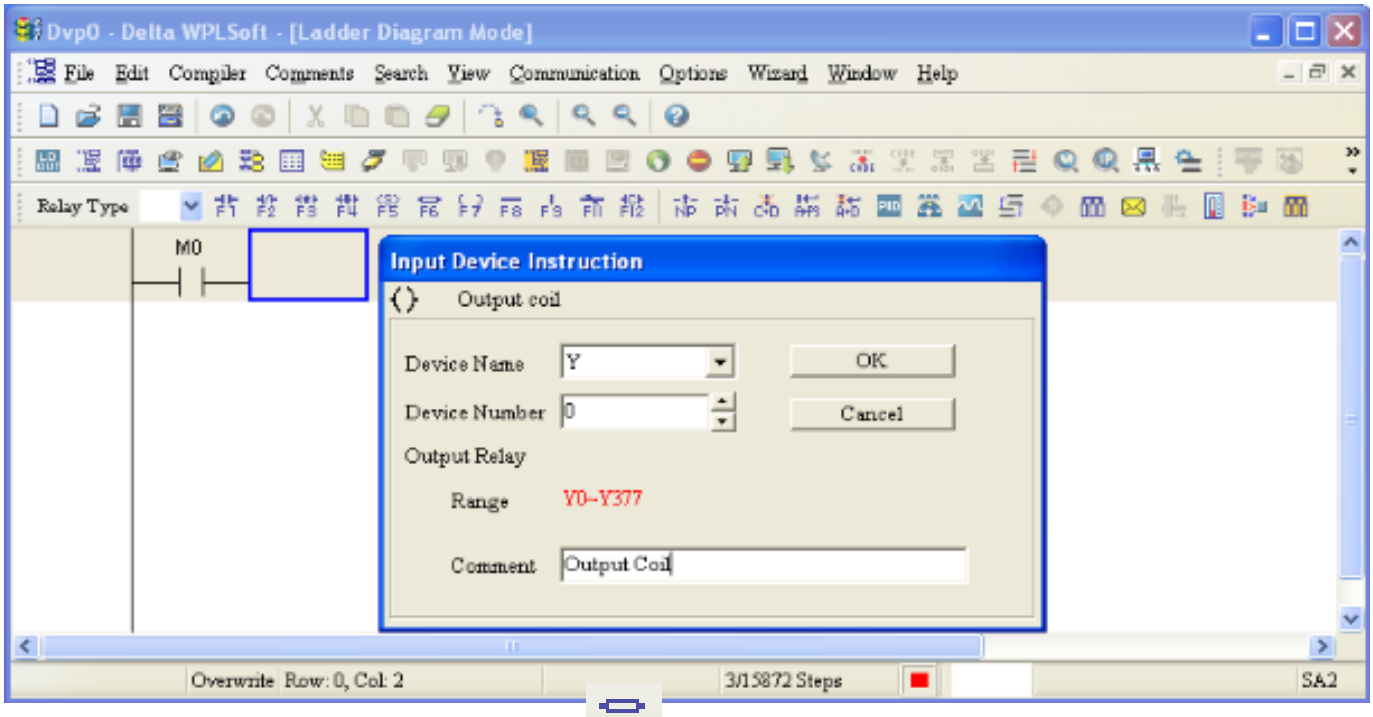


5. Click on application command icon or press function key F6. Click on "All application commands" in the function classification field, and click on the End command in the application command pull-down menu, or use the keyboard to key in "End" in that field, and press the confirm button.

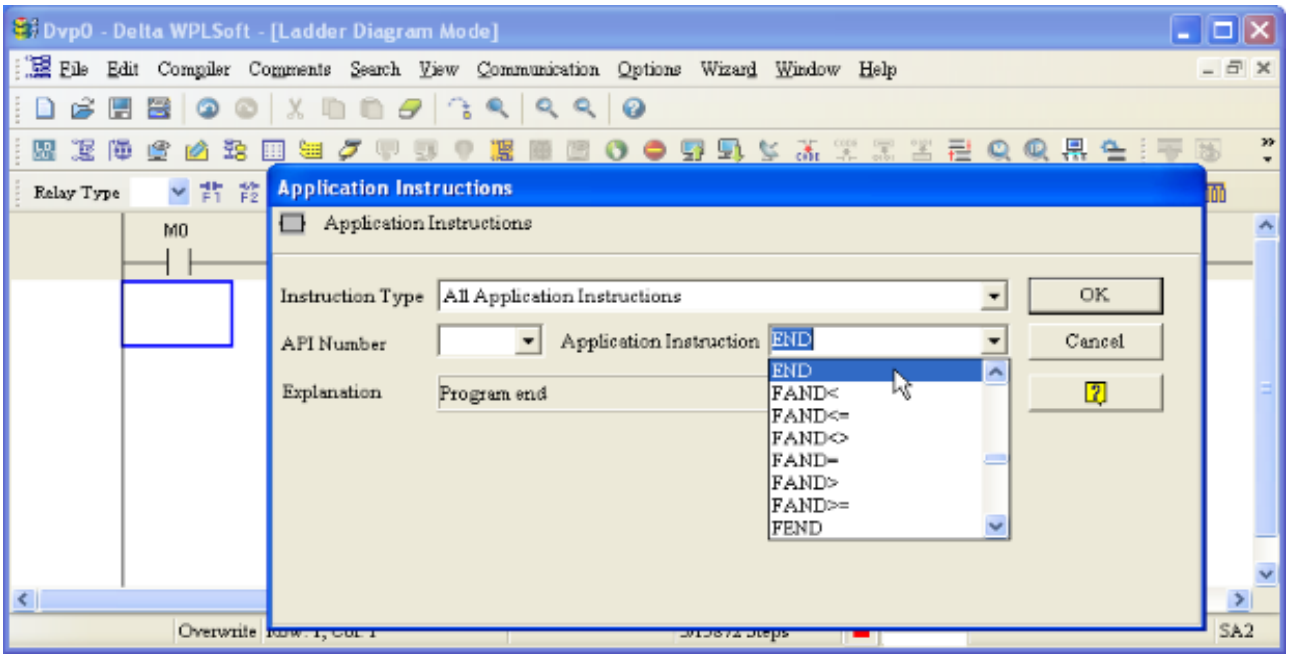


6. Click on the icon, which will compile the edited ladder diagram as a command

program. After compiling, the number of steps will appear on the left side of the busbar.

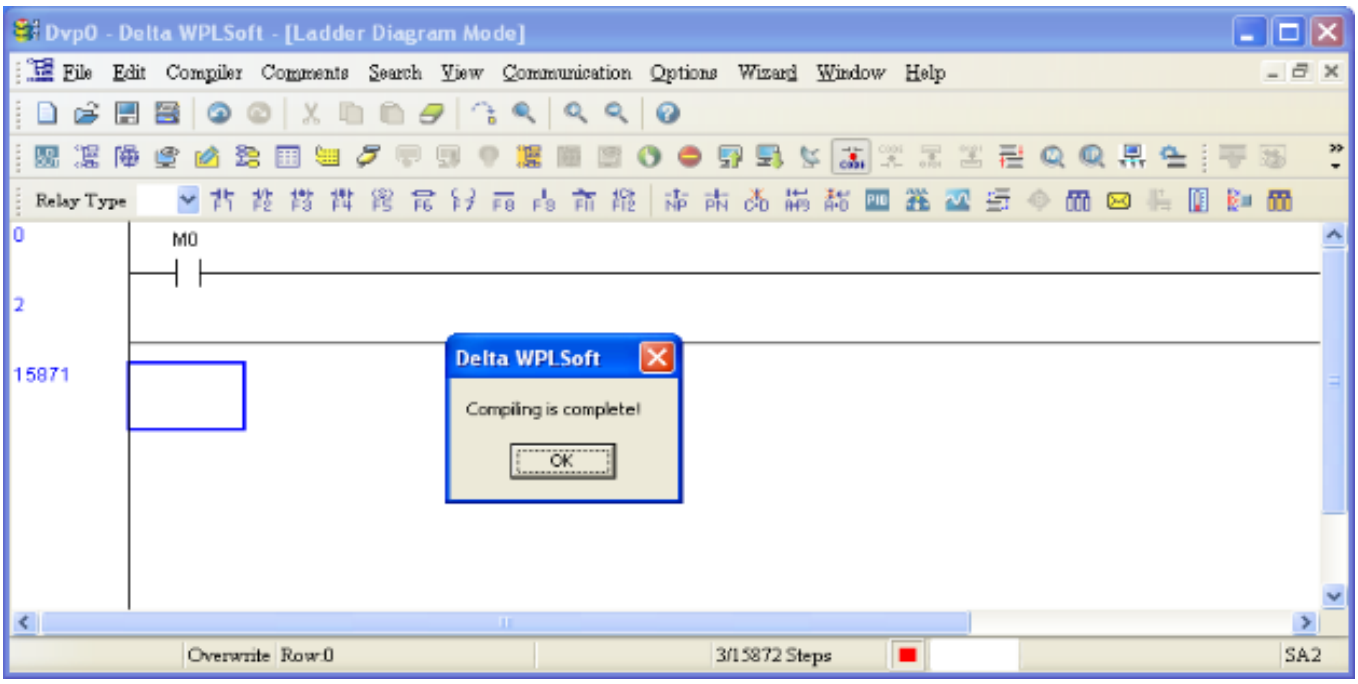


## D.2.5 Program Download

Please do following steps for program download.

Step 1. Press button for compiler after inputting program in WPLSoft.
Step 2. After finishing compiler, choose the item “Write to PLC” in the communication items.

After finishing Step 2, the program will be downloaded from WPLSoft to the AC motor drive by the communication format.

## D.2.6 Program Monitor

If you execute “start monitor” in the communication item during executing PLC, the ladder diagram will be shown as follows.

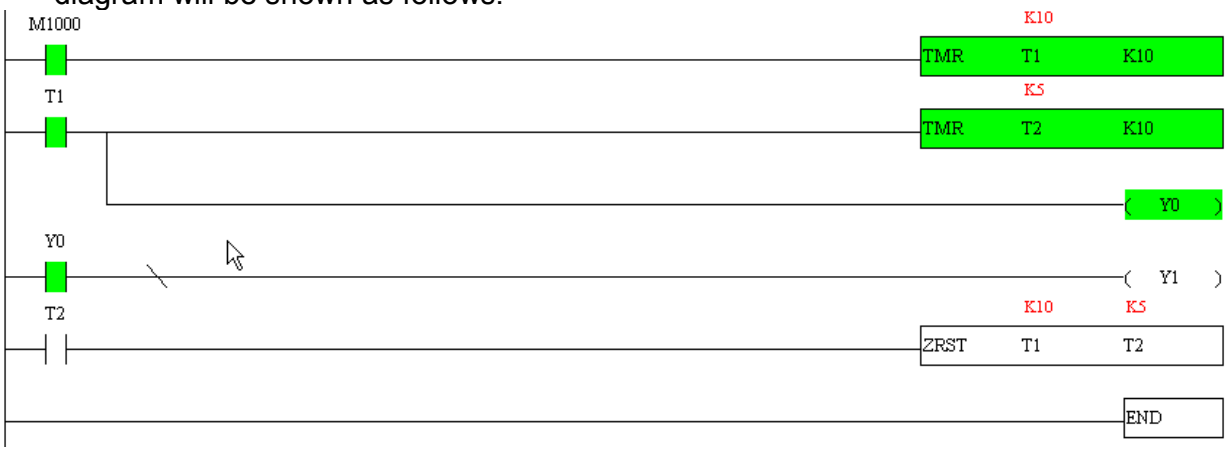


## D.2.7 The Limit of PLC

1. The protocol of PLC is 7,E,1
2. Make sure that the AC drive is stop and stop PLC before program upload/download.

3. PLC will be stopped when program upload/download
4. When using WPR, please note: The times of value changes will be within $10^6$. If exceeding this range, EEPROM may be damaged due to too much reading and writing. The criteria of counting the times is accord to whether the written value changing or not. If written value remains the same, it will not be counted as one time in next operation. If written value is changed, then it will be counted as one time.
5. When setting P 00.04 to 2, the display will be the value in PLC register D1043.
   A. 0 ~ 999 display:

   B. 1000 ~ 9999 display: It will only display the first 3 digits. The LED at the bottom-right corner will light to indicate 10 times of the display value. For example, the actual value for the following figure is 100X10=1000.

   C. 10000~65535 display: It will only display the first 3 digits. The LED at the bottom-right corner and the single decimal point between the middle and the right-most numbers will light to indicate 100 times of the display value. For example, the actual value for the following figure is 100X100=10000.

6. When it is changed to “PLC2”, RS-485 will be used by PLC.
7. When it is in PLC1 and PLC2 mode, the function to reset all parameters to factory setting is disabled (i.e. Pr.00.02 can’t be set to 9 or 10).

# D.3 Ladder Diagram

## D.3.1 Program Scan Chart of the PLC Ladder Diagram

Calculate the result by ladder diagram algorithm (it doesn't sent to the outer output point but the inner equipment will output immediately.)

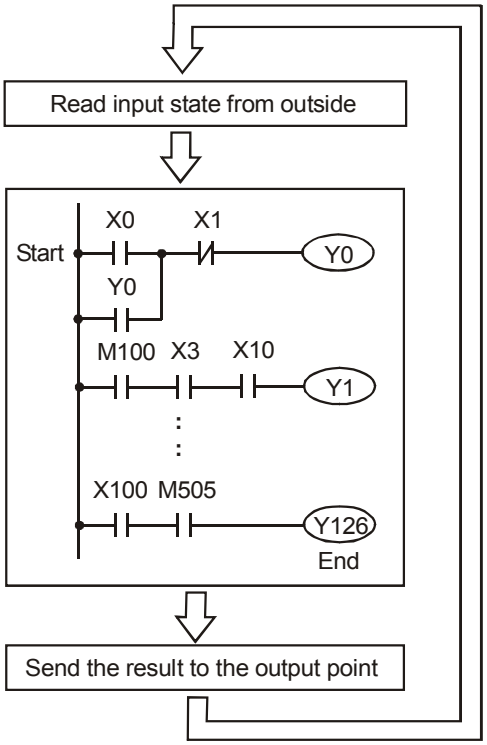


Execute in cycles

## D.3.2 Introduction

Ladder diagram is a diagram language that applies on the automatic control and it is also a diagram that made up of the symbols of electric control circuit. PLC procedures are finished after ladder diagram editor edits the ladder diagram. It is easy to understand the control flow that indicated with diagram and also accepted by technical staff of electric control circuit. Many basic symbols and motions of ladder diagram are the same as mechanical and electrical equipments of traditional automatic power panel, such as button, switch, relay, timer, counter and etc.

The kinds and amounts of PLC internal equipment will be different with brands. Although internal equipment has the name of traditional electric control circuit, such as relay, coil and contact. It doesn't have the real components in it. In PLC, it just has a basic unit of internal memory. If this bit is 1, it means the coil is ON and if this bit is 0, it means the coil is OFF.

You should read the corresponding value of that bit when using contact (Normally Open, NO or contact a). Otherwise, you should read the opposite sate of corresponding value of that bit when using contact (Normally Closed, NC or contact b). Many relays will need many bits, such as 8-bits makes up a byte. 2 bytes can make up a word. 2 words make up double word.

When using many relays to do calculation, such as add/subtraction or shift, you could use byte, word or double word. Furthermore, the two equipments, timer and counter, in PLC not only have coil but also value of counting time and times.

In conclusion, each internal storage unit occupies fixed storage unit. When using these equipments, the corresponding content will be read by bit, byte or word.
Basic introduction of the inner equipment of PLC:

| | |
|---|---|
| Input relay | Input relay is the basic storage unit of internal memory that corresponds to external input point (it is the terminal that used to connect to external input switch and receive external input signal). Input signal from external will decide it to display 0 or 1. You couldn't change the state of input relay by program design or forced ON/OFF via WPLSoft. The contacts (contact a, b) can be used unlimitedly. If there is no input signal, the corresponding input relay could be empty and can't be used with other functions.<br>☞ Equipment indication method: X0, X1,…X7, X10, X11,…. The symbol of equipment is X and the number uses octal. Please refer to D-2-2 I/O Device Reference Table for the numbers of input points. |
| Output relay | Output relay is the basic storage unit of internal memory that corresponds to external output point (it is used to connect to external load). It can be driven by input relay contact, the contact of other internal equipment and itself contact. It uses a normally open contact to connect to external load and other contacts can be used unlimitedly as input contacts. It doesn't have the corresponding output relay, if need, it can be used as internal relay.<br>☞ Equipment indication: Y0, Y1,…Y4. The symbol of equipment is Y and the number uses octal. Please refer to D-2-2 I/O Device Reference Table for the numbers of input points. |
| Internal relay | The internal relay doesn't connect directly to outside. It is an auxiliary relay in PLC. Its function is the same as the auxiliary relay in electric control circuit. Each auxiliary relay has the corresponding basic unit. It can be driven by the contact of input relay, output relay or other internal equipment. Its contacts can be used unlimitedly. Internal auxiliary relay can't output directly, it should output with output point.<br>☞ Equipment indication: M0, M1,…, M4, M159. The symbol of equipment is M and the number uses decimal number system. |
| Timer | Timer is used to control time. There are coil, contact and timer storage. When coil is ON, its contact will act (contact a is close, contact b is open) when attaining desired time. The time value of timer is set by settings and each timer has its regular period. User sets the timer value and each timer has its timing period. Once the coil is OFF, the contact won't act (contact a is open and contact b is close) and the timer will be set to zero.<br>☞ Equipment indication: T0, T1,…,T15. The symbol of equipment is T and the number uses decimal system. The different number range corresponds with the different timing period. |
| Counter | Counter is used to count. It needs to set counter before using counter (i.e. the pulse of counter). There are coil, contacts and storage unit of counter in counter. When coil is from OFF to ON, that means input a pulse in counter and the counter should add 1. There are 16-bit, 32-bit and high-speed counter for user to use.<br>☞ Equipment indication: C0, C1,…,C7. The symbol of equipment is C and the number uses decimal. |
| Data register | PLC needs to handle data and operation when controlling each order, timer value and counter value. The data register is used to store data or parameters. It stores 16-bit binary number, i.e. a word, in each register. It uses two continuous number of data register to store double words.<br>☞ Equipment indication: D0, D1,…,D29. The symbol of equipment is D and the number uses decimal. |

The structure and explanation of ladder diagram:

| Ladder Diagram Structure | Explanation | Command | Equipment |
|---|---|---|---|
| | Normally open, contact a | LD | X, Y, M, T, C |
| | Normally closed, contact b | LDI | X, Y, M, T, C |
| | Serial normally open | AND | X, Y, M, T, C |
| | Serial normally close | ANI | X, Y, M, T, C |
| | Parallel normally open | OR | X, Y, M, T, C |
| | Parallel normally closed | ORI | X, Y, M, T, C |
| | Rising-edge trigger switch | LDP | X, Y, M, T, C |
| | Falling-edge trigger switch | LDF | X, Y, M, T, C |
| | Rising-edge trigger in serial | ANDP | X, Y, M, T, C |
| | Falling-edge trigger in serial | ANDF | X, Y, M, T, C |
| | Rising-edge trigger in parallel | ORP | X, Y, M, T, C |
| | Falling-edge trigger in parallel | ORF | X, Y, M, T, C |
| | Block in serial | ANB | none |
| | Block in parallel | ORB | none |

| Ladder Diagram Structure | Explanation | Command | Equipment |
|---|---|---|---|
| | Multiple output | MPS<br>MRD<br>MPP | none |
| | Output command of coil drive | OUT | Y, M, S |
| | Basic command, Application command | Application command | Please refer to basic command and application command |
| | Inverse logic | INV | none |

## D.3.3 The Edition of PLC Ladder Diagram

The program edited method is from left power line to right power line. (the right power line will be omitted during the edited of WPLSoft.) After editing a row, go to editing the next row. The maximum contacts in a row are 11 contacts. If you need more than 11 contacts, you could have the new row and start with continuous line to continue more input devices. The continuous number will be produced automatically and the same input point can be used repeatedly. The drawing is shown as follows.

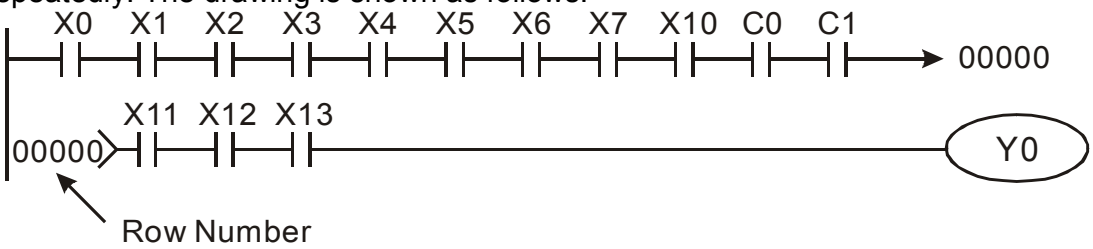


The operation of ladder diagram is to scan from left upper corner to right lower corner. The output handling, including the operation frame of coil and application command, at the most right side in ladder diagram.

Take the following diagram for example; we analyze the process step by step. The number at the right corner is the explanation order.

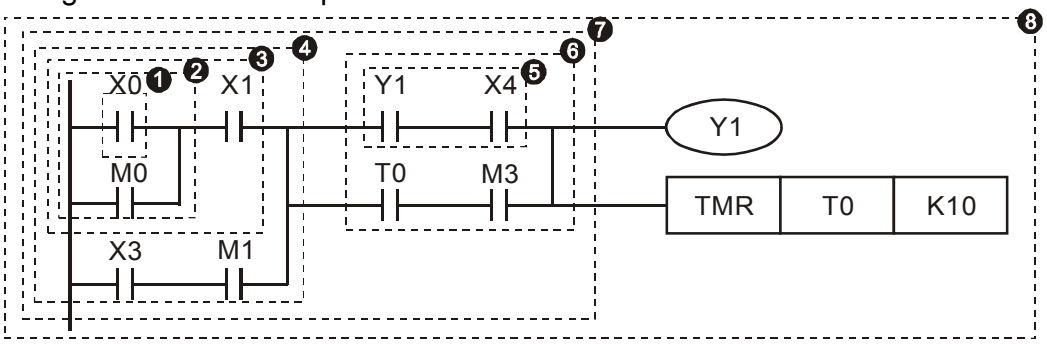

The explanation of command order:

| | | |
|---|---|---|
| 1 | LD | X0 |
| 2 | OR | M0 |
| 3 | AND | X1 |
| 4 | LD | X3 |
| | AND | M1 |
| | ORB | |
| 5 | LD | Y1 |
| | AND | X4 |
| 6 | LD | T0 |
| | AND | M3 |
| | ORB | |
| 7 | ANB | |
| 8 | OUT | Y1 |
| | TMR | T0 K10 |

The detail explanation of basic structure of ladder diagram

1. LD (LDI) command: give the command LD or LDI in the start of a block.

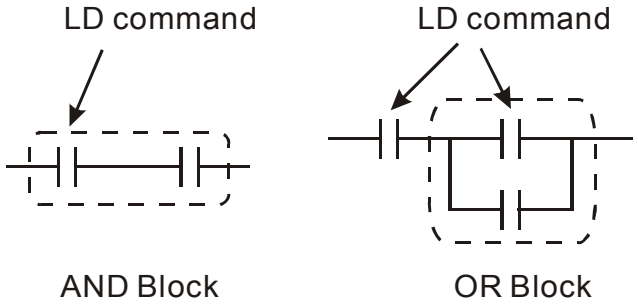


The structures of command LDP and LDF are similar to the command LD. The difference is that command LDP and LDF will act in the rising-edge or falling-edge when contact is ON as shown in the following.

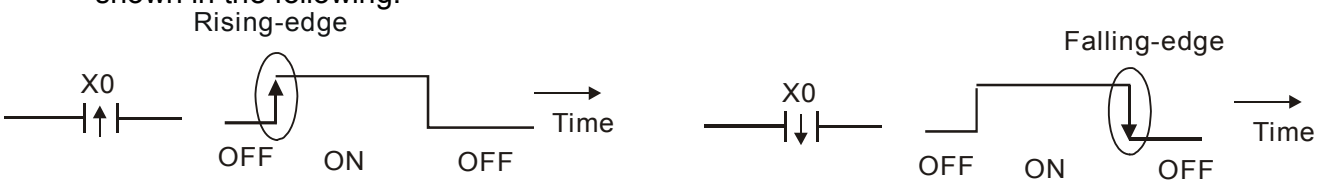


2. AND (ANI) command: single device connects to a device or a block in series.

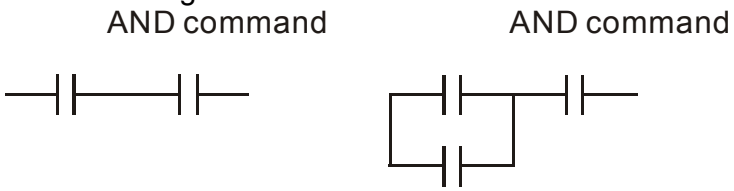


The structures of ANDP and ANDF are the same but the action is in rising-edge or falling-edge.

3. OR (ORI) command: single device connects to a device or a block.

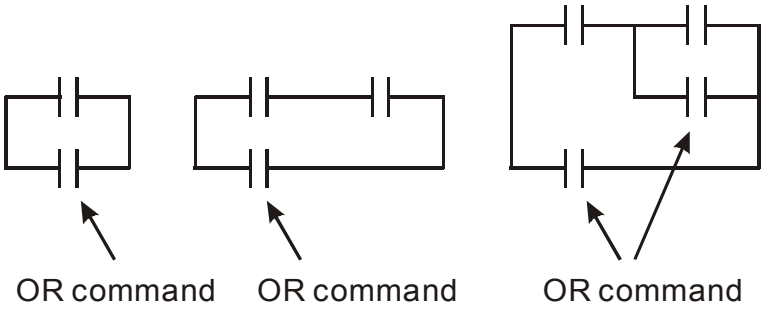


The structures of ORP and ORF are the same but the action is in rising-edge or falling-edge.

4. ANB command: a block connects to a device or a block in series.

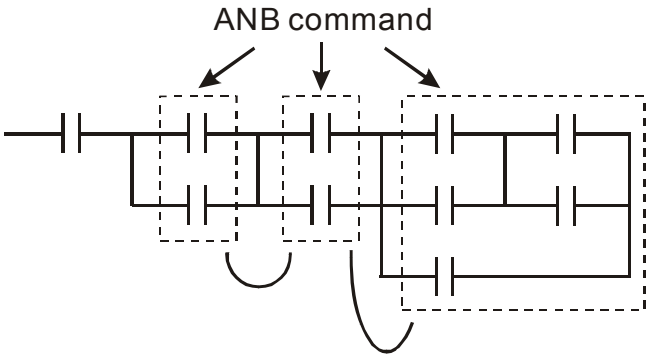


5. ORB command: a block connects to a device or a block in parallel.

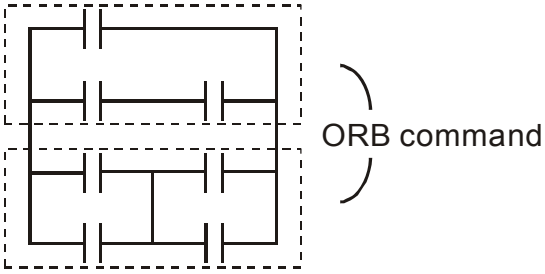


If there are several blocks when operate ANB or ORB, they should be combined to blocks or network from up to down or from left to right.

6. MPS, MRD, MPP commands: Divergent memory of multi-output. It can produce many various outputs.
7. The command MPS is the start of divergent point. The divergent point means the connection place between horizontal line and vertical line. We should determine to have contact memory command or not according to the contacts status in the same vertical line. Basically, each contact could have memory command but in some places of ladder diagram conversion will be omitted due to the PLC operation convenience and capacity limit. MPS command can be used for 8 continuous times and you can recognize this command by the symbol "┬".
8. MRD command is used to read memory of divergent point. Because the logical status is the same in the same horizontal line, it needs to read the status of original contact to keep on analyzing other ladder diagram. You can recognize the command MRD by the symbol "├".
9. MPP command is used to read the start status of the top level and pop it out from stack.

Because it is the last item of the horizontal line, it means the status of this horizontal line is ending.

You can recognize this command by the symbol “ └”. Basically, that is all right to use the above method to analyze but sometimes compiler will omit the same outputs as shown at the right.

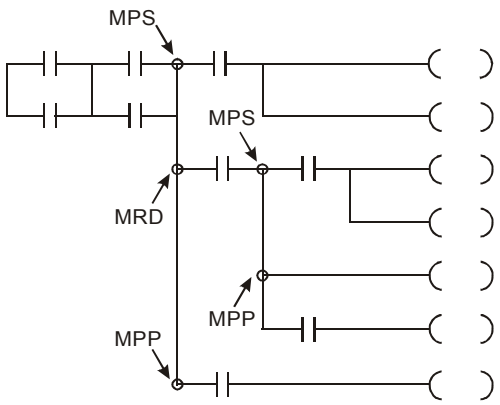

## D.3.4 The Example for Designing Basic Program

- Start, Stop and Latching

In the same occasions, it needs transient close button and transient open button to be start and stop switch. Therefore, if you want to keep the action, you should design latching circuit. There are several latching circuits in the following:

***Example 1: the latching circuit for priority of stop***

When start normally open contact X1=On, stop normally contact X2＝Off, and Y1=On are set at the same time, if X2=On, the coil Y1 will stop acting. Therefore, it calls priority of stop.

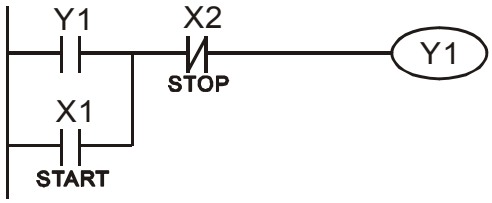


***Example 2: the latching circuit for priority of start***

When start normally open contact X1=On, stop normally contact X2＝Off and Y1=On (coil Y1 will be active and latching) are valid at the same time, if X2=On, coil Y1 will be active due to latched contact. Therefore, it calls priority of start.

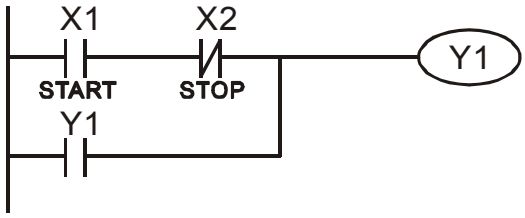


***Example 3: the latching circuit of SET and RST commands***

The figure at the right side is latching circuit that made up of RST and SET command.

It is top priority of stop when RST command is set behind SET command. When executing PLC from up to down, The coil Y1 is ON and coil Y1 will be OFF when X1 and X2 act at the same time, therefore it calls priority of stop.

Top priority of stop

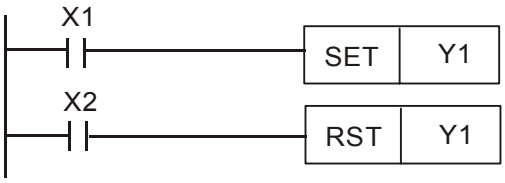


It is top priority of start when SET command is set after RST command. When X1 and X2 act at the same time, Y1 is ON so it calls top priority of start.

Top priority of start

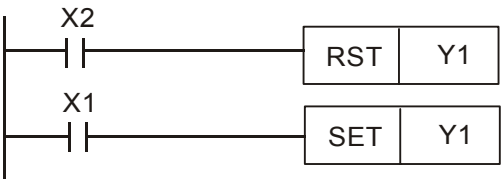


- The common control circuit

***Example 4: condition control***

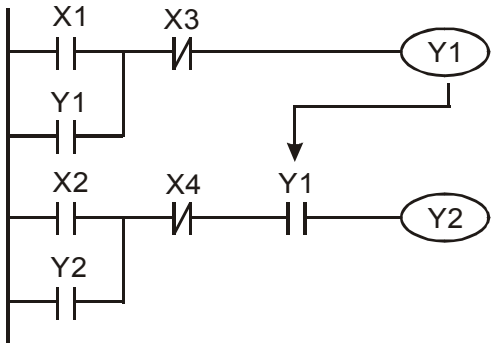


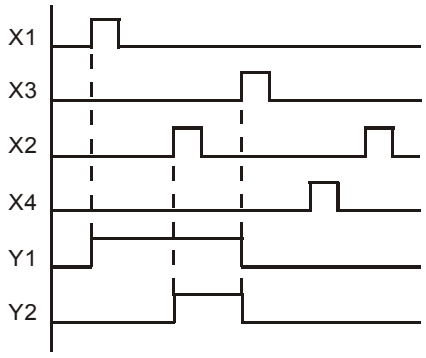


X1 and X3 can start/stop Y1 separately, X2 and X4 can start/stop Y2 separately and they are all self latched circuit. Y1 is an element for Y2 to do AND function due to the normally open contact connects to Y2 in series. Therefore, Y1 is the input of Y2 and Y2 is also the input of Y1.

***Example 5: Interlock control***

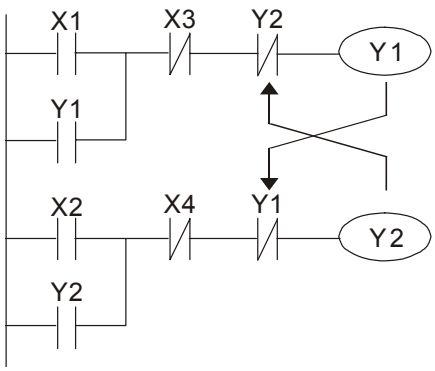


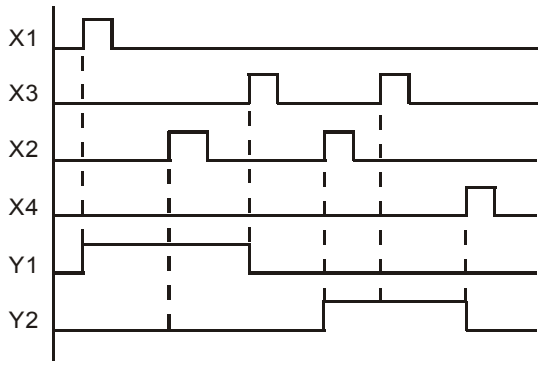


The figure above is the circuit of interlock control. Y1 and Y2 will act according to the start contact X1 and X2. Y1 and Y2 will act not at the same time, once one of them acts and the other won't act. (This is called interlock.) Even if X1 and X2 are valid at the same time, Y1 and Y2 won't act at the same time due to up-to-down scan of ladder diagram. For this ladder diagram, Y1 has higher priority than Y2.

***Example 6: Sequential Control***

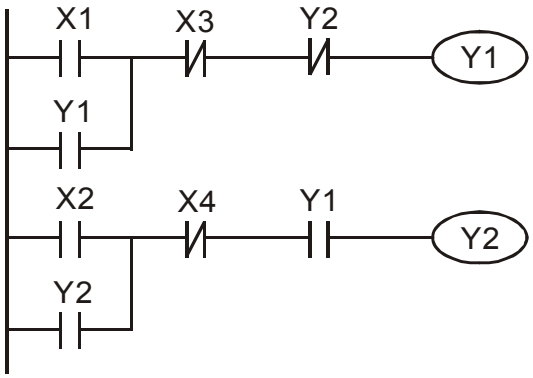


If add normally close contact Y2 into Y1 circuit to be an input for Y1 to do AND function. (as shown in the left side) Y1 is an input of Y2 and Y2 can stop Y1 after acting. In this way, Y1 and Y2 can execute in sequential.

***Example 7: Oscillating Circuit***

The period of oscillating circuit is $\Delta T + \Delta T$

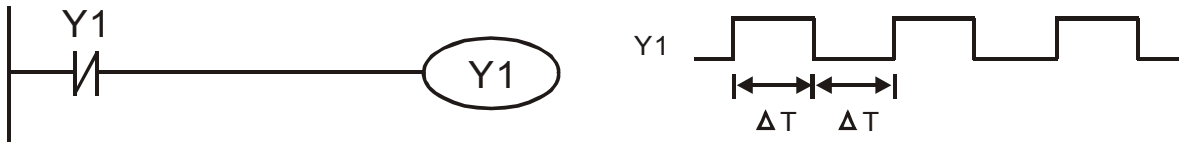


The figure above is a very simple ladder step diagram. When starting to scan Y1 normally close contact, Y1 normally close contact is close due to the coil Y1 is OFF. Then it will scan Y1 and the coil Y1 will be ON and output 1. In the next scan period to scan normally close contact Y1, Y1 normally close contact will be open due to Y1 is ON. Finally, coil Y1 will be OFF. The result of repeated scan, coil Y will output the vibrating pulse with cycle time △T(On)+△T(Off).

The vibrating circuitry of cycle time △T(On)+△T(Off):

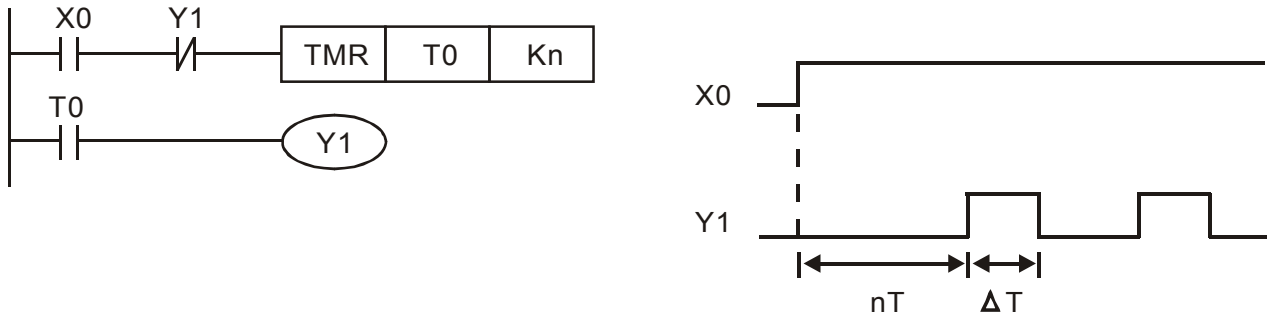


The figure above uses timer T0 to control coil Y1 to be ON. After Y1 is ON, timer T0 will be closed at the next scan period and output Y1. The oscillating circuit will be shown as above. (n is the setting of timer and it is decimal number. T is the base of timer. (clock period))

***Example 8: Blinking Circuit***

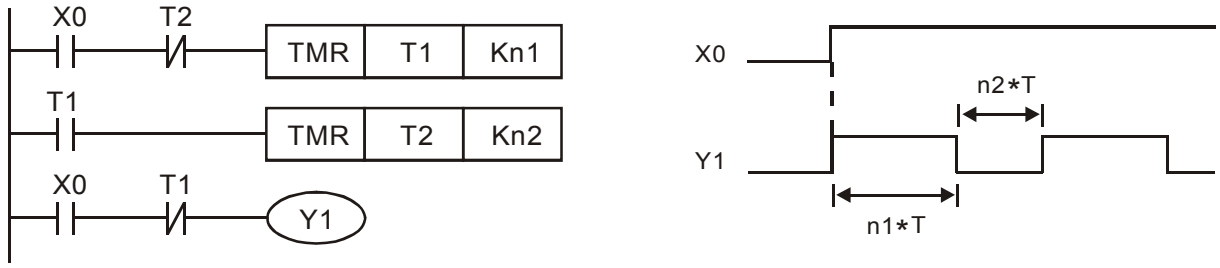


The figure above is common used oscillating circuit for indication light blinks or buzzer alarms. It uses two timers to control On/OFF time of Y1 coil. If figure, n1 and n2 are timer setting of T1 and T2. T is the base of timer (clock period)

**Example 9: Triggered Circuit**

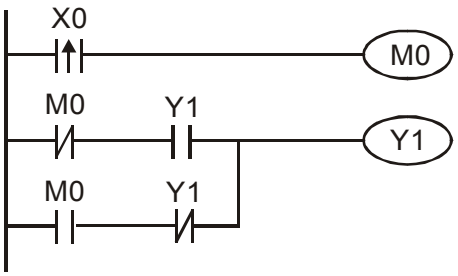


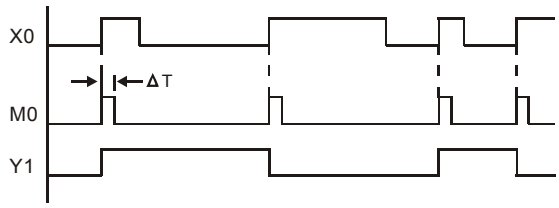


In figure above, the rising-edge differential command of X0 will make coil M0 to have a single pulse of △T (a scan time). Y1 will be ON during this scan time. In the next scan time, coil M0 will be OFF, normally close M0 and normally close Y1 are all closed. However, coil Y1 will keep on being ON and it will make coil Y1 to be OFF once a rising-edge comes after input X0 and coil M0 is ON for a scan time. The timing chart is as shown above. This circuit usually executes alternate two actions with an input. From above timing: when input X0 is a square wave of a period T, output coil Y1 is square wave of a period 2T.

***Example 10: Delay Circuit***

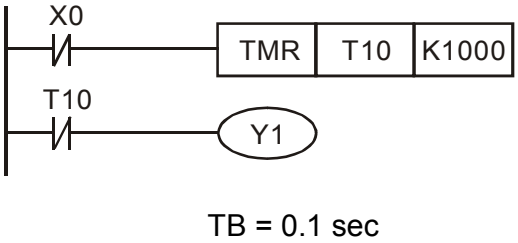


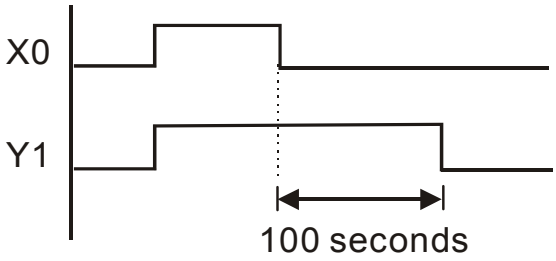


When input X0 is ON, output coil Y1 will be ON at the same time due to the corresponding normally close contact OFF makes timer T10 to be OFF. Output coil Y1 will be OFF after delaying 100 seconds (K1000*0.1 seconds =100 seconds) once input X0 is OFF and T10 is ON. Please refer to timing chart above.

***Example 11:*** **Output delay circuit**

In the following example, the circuit is made up of two timers. No matter input X0 is ON or OFF, output Y4 will be delay.

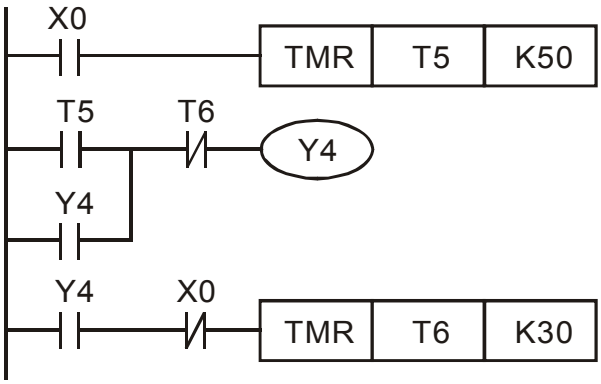


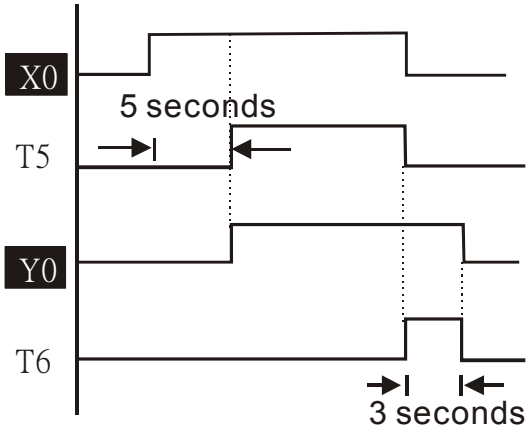


***Example12: Extend Timer Circuit***

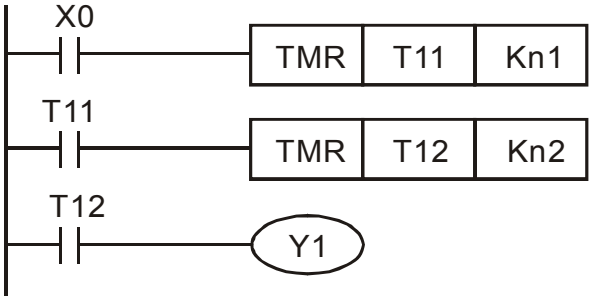


In this circuit, the total delay time from input X0 is close and output Y1 is ON= (n1+n2)* T. where T is clock period.

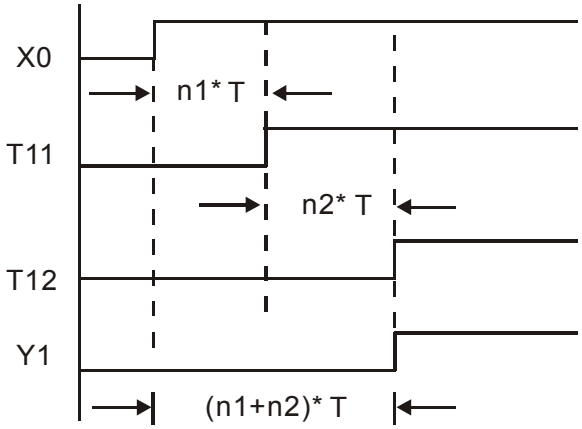

## D.4 PLC Devices

### D.4.1 Summary of DVP-PLC Device Number

| Items | | | | Specifications | | Remarks |
|---|---|---|---|---|---|---|
| Control Method | | | | Stored program, cyclic scan system | | |
| I/O Processing Method | | | | Batch processing (when END instruction is executed) | | I/O refresh instruction is available |
| Execution Speed | | | | Basic commands (minimum 0.24 us) | | Application commands (10 ~ hundreds us) |
| Program Language | | | | Instruction, Ladder Logic, SFC | | Including the Step commands |
| Program Capacity | | | | 500 STEPS | | SRAM + Battery |
| Input/Output Contact | | | | Digital Input (X): 6, Digital output (Y): 2, Analog input AI:2, Analog output AO:1 | | |
| Relay bit mode | X | External Input Relay | | X0~X17, 16 points, octal number system | Total is 32 points | Correspond to external input point |
| | Y | External Output Relay | | Y0~Y17, 16 points, octal number system | | Correspond to external output point |
| | M | Auxiliary | For general | M0~M159, 160 points | Total is 192 points | Contacts can switch to On/Off in program |
| | | | For special | M1000~M1031, 32 points | | |
| | T | Timer | 100ms timer | T0~T15, 16 points | Total is 16 points | When the timer indicated by TMR command attains the setting, the T contact with the same number will be On. |
| | C | Counter | 16-bit count up for general | C0~C7, 8 points | Total is 8 points | When the counter indicated by CNT command attains the setting, the C contact with the same number will be On. |

| Items | | | | Specifications | | Remarks |
|---|---|---|---|---|---|---|
| | | | 32-bit count up/down high-speed counter | C235, 1 point<br>(need to use with PG card)<br>(Use with DHSCS+M1018+M1028~M1030) | Total is 1 point | If the counter reaches the goal assigned by DHSCS, the contact will be ON |
| Register WORD data | T | Present value of timer | | T0~T15, 16 points | | When timer attains, the contact of timer will be On. |
| | C | Present value of counter | | C0~C7, 8-bit counter, 8 points | | When timer attains, the contact of timer will be On. |
| | D | Data register | For latched | D0~D9, 10 points | Total is 75 points | It can be memory area for storing data. |
| | | | For general | D10~D29, 20 points | | |
| | | | For special | D1000~D1044, 45 points | | |
| Constant | K | Decimal | | K-32,768 ~ K32,767 | | |
| | H | Hexadecimal | | H0000 ~ HFFFF | | |
| Communication port (for read/write program) | | | | RS485 (slave) | | |
| Analog input/output | | | | Built-in 2 analog inputs and 1 analog output | | |
| Function extension module (optional) | | | | Digital input/output card (A/D, D/A card) | | |

## D.4.2 Devices Functions

■ The Function of Input/output Contacts

The function of input contact X: input contact X reads input signal and enter PLC by connecting with input equipment. It is unlimited usage times for A contact or B contact of each input contact X in program. The On/Off of input contact X can be changed with the On/Off of input equipment but can't be changed by using peripheral equipment (WPLSoft).

■ The Function of Output Contact Y

The mission of output contact Y is to drive the load that connects to output contact Y by sending On/Off signal. There are two kinds of output contact: one is relay and the other is transistor. It is unlimited usage times for A or B contact of each output contact Y in program. But there is number for output coil Y and it is recommended to use one time in program. Otherwise, the output result will be decided by the circuit of last output Y with PLC program scan method.

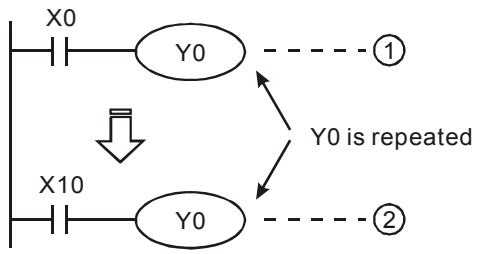


The output of Y0 will be decided by circuit ②, i.e. decided by On/Off of X10.

## D.4.3 Value, Constant [K] / [H]

| | | | |
|---|---|---|---|
| Constant | K | Decimal | K-32,768 ~ K32,767 |
| | H | Hexadecimal | H0000 ~ HFFFF |

There are five value types for DVP-PLC to use by the different control destination. The following is the explanation of value types.

1. Binary Number (BIN)

It uses binary system for the PLC internal operation or storage. The relative information of binary system is in the following.

| | | |
|---|---|---|
| Bit | : | Bit is the basic unit of binary system, the status are 1 or 0. |
| Nibble | : | It is made up of continuous 4 bits, such as b3~b0. It can be used to represent number 0~9 of decimal or 0~F of hexadecimal. |
| Byte | : | It is made up of continuous 2 nibbles, i.e. 8 bits, b7~b0. It can used to represent 00~FF of hexadecimal system. |
| Word | : | It is made up of continuous 2 bytes, i.e. 16 bits, b15~b0. It can used to represent 0000~FFFF of hexadecimal system. |
| Double Word | : | It is made up of continuous 2 words, i.e. 32 bits, b31~b0. It can used to represent 00000000~FFFFFFFF of hexadecimal system. |

The relations among bit, nibble, byte, word, and double word of binary number are shown as follows.

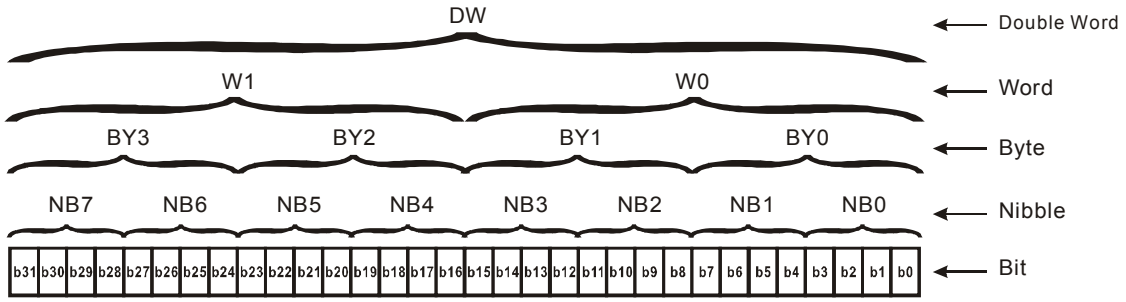


2. Octal Number (OCT)

The numbers of external input and output terminal of DVP-PLC use octal number.

Example:

External input: X0~X7, X10~X17…(device number)

External output: Y0~Y7, Y10~Y17…(device number)

3. Decimal Number (DEC)

The suitable time for decimal number to use in DVP-PLC system.

- To be the setting value of timer T or counter C, such as TMR C0 K50. (K constant)
- To be the device number of M, T, C and D. For example: M10, T3. (device number)
- To be operand in application command, such as MOV K123 D0. (K constant)

4. BCD (Binary Code Decimal, BCD)

It shows a decimal number by a unit number or four bits so continuous 16 bits can use to represent the four numbers of decimal number. BCD code is usually used to read the input value of DIP switch or output value to 7-segment display to be display.

5. Hexadecimal Number (HEX)

The suitable time for hexadecimal number to use in DVP-PLC system.

- To be operand in application command. For example: MOV H1A2B D0. (constant H)

Constant K:

In PLC, it is usually have K before constant to mean decimal number. For example, K100 means 100 in decimal number.

| |
|---|
| Exception:<br>The value that is made up of K and bit equipment X, Y, M will be bit, byte, word or double word. For example, K2Y10, K4M100. K1 means a 4-bit data and K2~K4 can be 8, 12 and 16-bit data separately. |

Constant H:

In PLC, it is usually have H before constant to mean hexadecimal number. For example, H100 means 100 in hexadecimal number.

## D.4.4 The Function of Auxiliary Relay

There are output coil and A, B contacts in auxiliary relay M and output relay Y. It is unlimited usage times in program. User can control loop by using auxiliary relay, but can't drive external load directly. There are two types divided by its characteristics.

1. Auxiliary relay for general : It will reset to Off when power loss during running. Its state will be Off when power on after power loss.
2. Auxiliary relay for special : Each special auxiliary relay has its special function. Please don't use undefined auxiliary relay.

## D.4.5 The Function of Timer

The unit of timer is 100ms. The count method is count up. The output coil will be On when the present value of timer equals to the settings. The setting is K in decimal number. Data register D can be also used as settings.
The real setting time of timer = unit of timer * settings

## D.4.6 The Features and Functions of Counter

Features:

| Item | 16 bits counters | 32 bits counters | |
|---|---|---|---|
| Type | General | High speed | |
| Count direction | Count up | Count up/down | |
| Settings | 0~32,767 | -2,147,483,648~+2,147,483,647 | |
| Designate for constant | Constant K or data register D | Constant K or data register D (2 for designated) | |
| Present value change | Counter will stop when attaining settings | Counter will keep on counting when attaining settings | |
| Output contact | When count attains settings, contact will be On and latched. | When count up attains settings, contact will be On and latched.<br>When count down attains settings, contact will reset to Off. | |
| Reset action | The present value will reset to 0 when RST command is executed and contact will reset to Off. | | |
| Present register | 16 bits | 32 bits | |
| Contact action | After scanning, act together. | After scanning, act together. | Act immediately when count attains. It has no relation with scan period. |

Functions:

When pulse input signal of counter is from Off to On, the present value of counter equals to settings and output coil is On. Settings are decimal system and data register D can also be used as settings.

16-bit counters C0~C7:

1. Setting range of 16-bit counter is K0~K32,767. (K0 is the same as K1. output contact will be On immediately at the first count.
2. General counter will be clear when PLC is power loss. If counter is latched, it will remember the value before power loss and keep on counting when power on after power loss.
3. If using MOV command or WPLSoft to send a value, which is large than setting to C0, register, at the next time that X1 is from Off to On, C0 counter contact will be On and present value will be set to the same as settings.
4. The setting of counter can use constant K or register D (not includes special data register D1000~D1044) to be indirect setting.
5. If using constant K to be setting, it can only be positive number but if setting is data register D, it can be positive/negative number. The next number that counter counts up from 32,767 is -32,768.

Example:

```
LD    X0
RST   C0
LD    X1
CNT   C0  K5
LD    C0
OUT   Y0
```

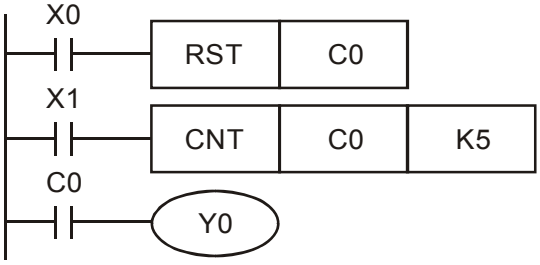


1. When X0=On, RST command is executed, C0 reset to 0 and output contact reset to Off.
2. When X1 is from Off to On, counter will count up (add 1).
3. When counter C0 attains settings K5, C0 contact is On and C0 = setting =K5. C0 won't accept X1 trigger signal and C0 remains K5.

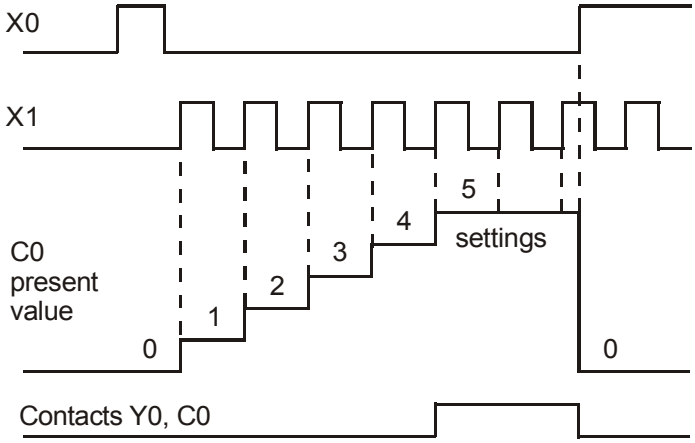


32-bit high-speed up/down counter C235:

1. Setting range of 32-bit high-speed up/down counter is :

   K-2,147,483,648~K2,147,483,647.

2. The settings can be positive / negative numbers by using constant K or data register D (special data register D1000~D1044 is not included). If using data register D, the setting will occupy two continuous data register.

The total band width of high-speed counter that VFD-E supports is up to 30kHz and 500kHz for pulse input.

## D.4.7 Register Types

There are two types of register which sorts by characters in the following:

1. General register : The data in register will be cleared to 0 when PLC switches from RUN to STOP or power is off.

2. Special register : Each special register has the special definition and purpose. It is used to save system status, error messages, monitor state.

## D.4.8 Special Auxiliary Relays

| Special M | Function | Read(R)/ Write(W) |
|---|---|---|
| M1000 | Normally open contact (a contact). This contact is On when running and it is On when the status is set to RUN. | R |
| M1001 | Normally closed contact (b contact). This contact is Off in running and it is Off when the status is set to RUN. | R |
| M1002 | On only for 1 scan after RUN. Initial pulse is contact a. It will get positive pulse in the RUN moment. Pulse width=scan period. | R |
| M1003 | Off only for 1 scan after RUN. Initial pulse is contact a. It will get negative pulse in the RUN moment. Pulse width=scan period. | R |
| M1004 | -- | -- |
| M1005 | Fault indication of the AC motor drives | R |
| M1006 | Output frequency is 0 | R |
| M1007 | The operation direction of AC motor drives (FWD: 0, REV: 1) | R |
| M1008 | -- | -- |
| M1009 | -- | -- |
| M1010 | -- | -- |
| M1011 | 10ms clock pulse, 5ms On/5ms Off | R |
| M1012 | 100ms clock pulse, 50ms On / 50ms Off | R |
| M1013 | 1s clock pulse, 0.5s On / 0.5s Off | R |
| M1014 | 1min clock pulse, 30s On / 30s Off | R |
| M1015 | Frequency attained | R |
| M1016 | Parameter read/write error | R |
| M1017 | Succeed to write parameter | R |
| M1018 | Enable high-speed counter function (When M1028=On) | R |
| M1019 | -- | -- |
| M1020 | Zero flag | R |
| M1021 | Borrow flag | R |
| M1022 | Carry flag | R |
| M1023 | Divisor is 0 | R |
| M1024 | -- | -- |
| M1025 | RUN(ON) / STOP(OFF) the AC motor drive | R/W |

| Special M | Function | Read(R)/ Write(W) |
|---|---|---|
| M1026 | Setting operation direction of the AC motor drive (0: FWD, 1:REV) | R/W |
| M1027 | Trigger motor drive reset | R/W |
| M1028 | Enable(ON)/disable(OFF) high-speed counter function | R/W |
| M1029 | Clear the value of high-speed counter | R/W |
| M1030 | Decide to count up(OFF)/count down(ON) | R/W |
| M1031 | Enforce setting current integral value of PID equal to D1019 (activate from 0 to 1) | R/W |

## D.4.9 Special Registers

| Special D | Function | Read(R)/ Write(W) |
|---|---|---|
| D1000 | -- | -- |
| D1001 | PLC firmware version | R |
| D1002 | Program capacity | R |
| D1003 | Checksum | R |
| D1004-D1009 | Reserved | -- |
| D1010 | Present scan time (Unit: 0.1ms) | R |
| D1011 | Minimum scan time (Unit: 0.1ms) | R |
| D1012 | Maximum scan time (Unit: 0.1ms) | R |
| D1013-D1017 | -- | -- |
| D1018 | Current integral value | R |
| D1019 | Enforce setting I integral value of PID | R/W |
| D1020 | Output frequency(0.00~600.00Hz) | R |
| D1021 | Output current (####.#A) | R |
| D1022 | The ID of the extension card:<br>02 USB Card (CME-USB01)<br>03 12-Bit A/D (2CH) 12-Bit D/A (2CH) (EME-A22A)<br>04 Relay Card-2C (EME-R2CA)<br>05 Relay Card-3A (EME-R3AA)<br>06 3IN/3OUT Card (EME-D33A)<br>07 PG Card (EME-PG01)<br>08 6IN 110VAC card (EME-D611A)<br>09 AUI & 3OUT (EME-A1D3A) | R |
| D1023-D1024 | Reserved | -- |
| D1025 | The present value of the high-speed counter C235 (low byte) | R |
| D1026 | The present value of the high-speed counter C235 (high byte) | R |
| D1027 | Frequency command of the PID control | R |
| D1028 | The value of AVI (analog voltage input) 0-10V corresponds to 0-1023 | R |

| Special D | Function | Read(R)/ Write(W) |
|---|---|---|
| D1029 | The value of ACI (analog current input) 4-20mA corresponds to 0-1023 or the value of AVI2 (analog voltage input) 0-10V corresponds to 0-1023 | R |
| D1030 | The value of V.R digital keypad 0-10V corresponds to 0-1023 | R |
| D1031 | Extension card AI1 analog input: 0~10V or 0~20mA correspond to (0~4095) | R |
| D1032 | Extension card AI2 analog input: 0~10V or 0~20mA correspond to (0~4095) | R |
| D1033-D1035 | -- | -- |
| D1036 | Motor Drive error code | R |
| D1037-D1039 | -- | -- |
| D1040 | AFM analog output value | R/W |
| D1041 | Extension card AO1 analog output: 0~10V or 0~20mA correspond to (0~65535) | R/W |
| D1042 | Extension card AO2 analog output: 0~10V or 0~20mA correspond to (0~65535) | R/W |
| D1043 | User defined (when Pr.00.04 is set to 2, the register data will be displayed as C xxx) | R/W |
| D1044 | High-speed counter mode | R/W |

## D.4.10 Communication Addresses for Devices (only for PLC2 mode)

| Device | Range | Type | Address (Hex) |
|---|---|---|---|
| X | 00–17 (octal) | Bit | 0400-040F |
| Y | 00–17 (octal) | Bit | 0500-050F |
| T | 00-15 | Bit/word | 0600-060F |
| M | 000-159 | Bit | 0800-089F |
| M | 1000-1031 | Bit | 0BE8-0C07 |
| C | 0-7 | Bit/word | 0E00-0E07 |
| D | 00-29 | Word | 1000-101D |
| D | 1000-1044 | Word | 13E8-1414 |

## D.4.11 Function Code (only for PLC2 mode)

| Function Code | Description | Supported Devices |
|---|---|---|
| H1 | Read coil status | Y, M, T, C |
| H2 | Read input status | X, Y, M, T, C |
| H3 | Read one data | T, C, D |
| H5 | Force changing one coil status | Y, M, T, C |
| H6 | Write in one data | T, C, D |
| HF | Force changing multiple coil status | Y, M, T, C |
| H10 | Write in multiple data | T, C, D |

**NOTE:**
In PLC1 mode, the Modbus communication will correspond to the registers of motor drive.
In PLC2 mode, the Modbus communication will correspond to the registers of internal PLC.

**For example:**
In PLC1 mode, communication register 0400H corresponds to parameter 04.00.
In PLC2 mode, communication register 0400H corresponds to X0.

# D.5 Commands

## D.5.1 Basic Commands

| Commands | Function | Operands | processing Speed(us) |
|---|---|---|---|
| LD | Load contact A | X, Y, M, T, C | 10 |
| LDI | Load contact B | X, Y, M, T, C | 10 |
| AND | Series connection with A contact | X, Y, M, T, C | 10 |
| ANI | Series connection with B contact | X, Y, M, T, C | 10 |
| OR | Parallel connection with A contact | X, Y, M, T, C | 10 |
| ORI | Parallel connection with B contact | X, Y, M, T, C | 10 |
| ANB | Series connects the circuit block | -- | 4 |
| ORB | Parallel connects the circuit block | -- | 4 |
| MPS | Save the operation result | -- | 4 |
| MRD | Read the operation result (the pointer not moving) | -- | 4 |
| MPP | Read the result | -- | 4 |
| INV | Inverter the result | -- | 4 |

## D.5.2 Output Commands

| Commands | Function | Operands | processing Speed(us) |
|---|---|---|---|
| OUT | Drive coil | Y, M | 14 |
| SET | Action latched (ON) | Y, M | 14 |
| RST | Clear the contacts or the registers | Y, M, T, C, D | 18 |

## D.5.3 Timer and Counters

| Commands | Function | Operands | processing Speed(us) |
|---|---|---|---|
| TMR | 16-bit timer | T-K or T-D | 32 |
| CNT | 16-bit counter | C-K or C-D | 37 |

### D.5.4 Main Control Commands

| Commands | Function | Operands |
|---|---|---|
| MC | Connect the common series connection contacts | N0~N7 |
| MCR | Disconnect the common series connection contacts | N0~N7 |

### D.5.5 Rising-edge/falling-edge Detection Commands of Contact

| Commands | Function | Operands |
|---|---|---|
| LDP | Rising-edge detection operation starts | X, Y, M, T, C |
| LDF | Falling-edge detection operation starts | X, Y, M, T, C |
| ANDP | Rising-edge detection series connection | X, Y, M, T, C |
| ANDF | Falling-edge detection series connection | X, Y, M, T, C |
| ORP | Rising-edge detection parallel connection | X, Y, M, T, C |
| ORF | Falling-edge detection parallel connection | X, Y, M, T, C |

### D.5.6 Rising-edge/falling-edge Output Commands

| Commands | Function | Operands |
|---|---|---|
| PLS | Rising-edge output | Y, M |
| PLF | Falling-edge output | Y, M |

### D.5.7 End Command

| Command | Function | Operands |
|---|---|---|
| END | Program end | none |

## D.5.8 Explanation for the Commands

| Mnemonic | Function | | | | | |
|---|---|---|---|---|---|---|
| LD | Load A contact | | | | | |
| **Operand** | X0~X17 | Y0~Y17 | M0~M159 | T0~15 | C0~C7 | D0~D29 |
| | ✓ | ✓ | ✓ | ✓ | ✓ | -- |

Explanations:
The LD command is used on the A contact that has its start from the left BUS or the A contact that is the start of a contact circuit. Function of the command is to save present contents, and at the same time, save the acquired contact status into the accumulative register.
Program Example:

| Ladder diagram | Command code | | Operation |
|---|---|---|---|
| | **LD** | **X0** | Load contact A of X0 |
| | AND | X1 | Connect to contact A of X1 in series |
| | OUT | Y1 | Drive Y1 coil |

| Mnemonic | Function | | | | | |
|---|---|---|---|---|---|---|
| LDI | Load B contact | | | | | |
| **Operand** | X0~X17 | Y0~Y17 | M0~M159 | T0~15 | C0~C7 | D0~D29 |
| | ✓ | ✓ | ✓ | ✓ | ✓ | -- |

Explanations:
The LDI command is used on the B contact that has its start from the left BUS or the B contact that is the start of a contact circuit. Function of the command is to save present contents, and at the same time, save the acquired contact status into the accumulative register.
Program Example:

Ladder diagram:

| Command code: | | Operation: |
|---|---|---|
| **LDI** | **X0** | Load contact B of X0 |
| AND | X1 | Connect to contact A of X1 in series |
| OUT | Y1 | Drive Y1 coil |

| Mnemonic | Function |
|---|---|

| AND | Series connection- A contact | | | | | |
|---|---|---|---|---|---|---|
| **Operand** | X0~X17 | Y0~Y17 | M0~M159 | T0~15 | C0~C7 | D0~D29 |
| | ✓ | ✓ | ✓ | ✓ | ✓ | -- |

Explanations:
The AND command is used in the series connection of A contact. The function of the command is to readout the status of present specific series connection contacts first, and then to perform the “AND” calculation with the logic calculation result before the contacts, thereafter, saving the result into the accumulative register.
Program Example:

Ladder diagram:

| Command code: | | Operation: |
|---|---|---|
| LDI | X1 | Load contact B of X1 |
| **AND** | **X0** | Connect to contact A of X0 in series |
| OUT | Y1 | Drive Y1 coil |

| **Mnemonic** | **Function** | | | | | |
|---|---|---|---|---|---|---|
| ANI | Series connection- B contact | | | | | |
| **Operand** | X0~X17 | Y0~Y17 | M0~M159 | T0~15 | C0~C7 | D0~D29 |
| | ✓ | ✓ | ✓ | ✓ | ✓ | -- |

Explanations:
The ANI command is used in the series connection of B contact. The function of the command is to readout the status of present specific series connection contacts first, and then to perform the “AND” calculation with the logic calculation result before the contacts, thereafter, saving the result into the accumulative register.

Program Example:

Ladder diagram:

| Command code: | | Operation: |
|---|---|---|
| LD | X1 | Load contact A of X1 |
| **ANI** | **X0** | Connect to contact B of X0 in series |
| OUT | Y1 | Drive Y1 coil |

| **Mnemonic** | **Function** |
|---|---|
| OR | Parallel connection- A contact |

| Operand | X0~X17 | Y0~Y17 | M0~M159 | T0~15 | C0~C7 | D0~D29 |
|---|---|---|---|---|---|---|
| | ✓ | ✓ | ✓ | ✓ | ✓ | -- |

Explanations:
The OR command is used in the parallel connection of A contact. The function of the command is to readout the status of present specific series connection contacts, and then to perform the “OR” calculation with the logic calculation result before the contacts, thereafter, saving the result into the accumulative register.

Program Example:

Ladder diagram:

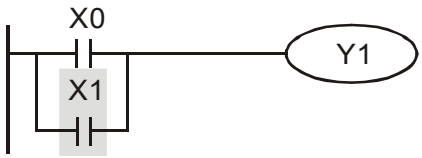


| Command code: | | Operation: |
|---|---|---|
| LD | X0 | Load contact A of X0 |
| **OR** | **X1** | Connect to contact A of X1 in parallel |
| OUT | Y1 | Drive Y1 coil |

| Mnemonic | Function | | | | | |
|---|---|---|---|---|---|---|
| ORI | Parallel connection- B contact | | | | | |
| **Operand** | X0~X17 | Y0~Y17 | M0~M159 | T0~15 | C0~C7 | D0~D29 |
| | ✓ | ✓ | ✓ | ✓ | ✓ | -- |

Explanations:
The ORI command is used in the parallel connection of B contact. The function of the command is to readout the status of present specific series connection contacts, and then to perform the “OR” calculation with the logic calculation result before the contacts, thereafter, saving the result into the accumulative register.
Program Example:

Ladder diagram:

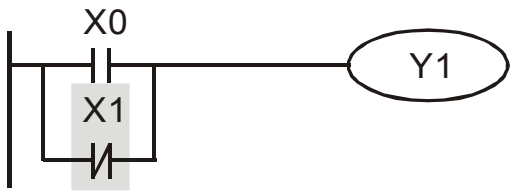


| Command code: | | Operation: |
|---|---|---|
| LD | X1 | Load contact A of X0 |
| **ORI** | **X1** | Connect to contact B of X1 in parallel |
| OUT | Y1 | Drive Y1 coil |

| Mnemonic | Function |
|---|---|
| ANB | Series connection (Multiple Circuits) |

| Operand | None |
|---|---|

Explanations:
To perform the “ANB” calculation between the previous reserved logic results and contents of the accumulative register.

Program Example:

Ladder diagram:

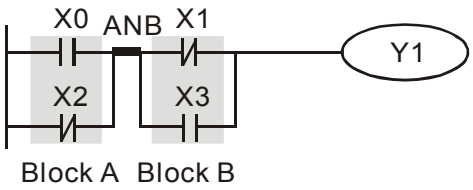


| Command code: | | Operation: |
|---|---|---|
| LD | X0 | Load contact A of X0 |
| ORI | X2 | Connect to contact B of X2 in parallel |
| LDI | X1 | Load contact B of X1 |
| OR | X3 | Connect to contact A of X3 in parallel |
| **ANB** | | Connect circuit block in series |
| OUT | Y1 | Drive Y1 coil |

| Mnemonic | Function |
|---|---|
| ORB | Parallel connection (Multiple circuits) |
| **Operand** | None |

Explanations:
To perform the “OR” calculation between the previous reserved logic results and contents of the accumulative register.

Program Example:

Ladder diagram:

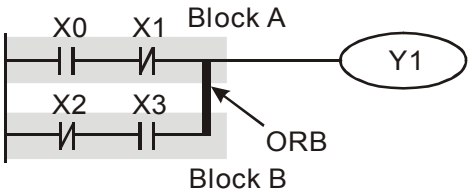


| Command code: | | Operation: |
|---|---|---|
| LD | X0 | Load contact A of X0 |
| ANI | X1 | Connect to contact B of X1 in series |
| LDI | X2 | Load contact B of X2 |
| AND | X3 | Connect to contact A of X3 in series |
| **ORB** | | Connect circuit block in parallel |
| OUT | Y1 | Drive Y1 coil |

| Mnemonic | Function |
|---|---|
| MPS | Store the current result of the internal PLC operations |
| **Operand** | None |

Explanations:
To save contents of the accumulative register into the operation result. (the result operation pointer pluses 1)

| Mnemonic | Function |
|---|---|
| MRD | Reads the current result of the internal PLC operations |
| **Operand** | None |

Explanations:
Reading content of the operation result to the accumulative register. (the pointer of operation result doesn't move)

| Mnemonic | Function |
|---|---|
| MPP | Reads the current result of the internal PLC operations |
| **Operand** | None |

Explanations:
Reading content of the operation result to the accumulative register. (the stack pointer will decrease 1)

Program Example:

Ladder diagram:

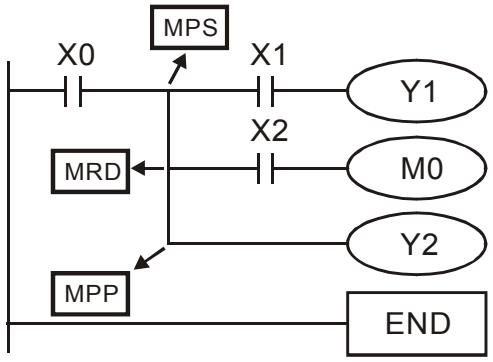


| Command code: | | Operation: |
|---|---|---|
| LD | X0 | Load contact A of X0 |
| MPS | | Save in stack |
| AND | X1 | Connect to contact A of X1 in series |
| OUT | Y1 | Drive Y1 coil |
| **MRD** | | Read from the stack (without moving pointer) |
| AND | X2 | Connect to contact A of X2 in series |
| OUT | M0 | Drive M0 coil |
| **MPP** | | Read from the stack |
| OUT | Y2 | Drive Y2 coil |
| END | | End program |

| Mnemonic | Function |
|---|---|
| INV | Inverting Operation |
| **Operand** | None |

Explanations:

Inverting the operation result and use the new data as an operation result.

Program Example:

Ladder diagram:

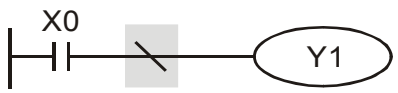


| Command code: | | Operation: |
|---|---|---|
| LD | X0 | Load A contact of X0 |
| **INV** | | Inverting the operation result |
| OUT | Y1 | Drive Y1 coil |

| **Mnemonic** | **Function** | | | | | |
|---|---|---|---|---|---|---|
| OUT | Output coil | | | | | |
| **Operand** | X0~X17 | Y0~Y17 | M0~M159 | T0~15 | C0~C7 | D0~D29 |
| | -- | ✓ | ✓ | -- | -- | -- |

Explanations:
Output the logic calculation result before the OUT command to specific device.

Motion of coil contact

| **Operation result** | **OUT command** | | |
|---|---|---|---|
| | **Coil** | **Contact** | |
| | | **A contact (normally open)** | **B contact (normally closed)** |
| FALSE | OFF | Non-continuity | Continuity |
| TRUE | ON | Continuity | Non-continuity |

Program Example:

Ladder diagram:

| Command code: | | Operation: |
|---|---|---|
| LDI | X0 | Load contact B of X0 |
| AND | X1 | Connect to contact A of X1 in series |
| **OUT** | **Y1** | Drive Y1 coil |

| **Mnemonic** | **Function** | | | | | |
|---|---|---|---|---|---|---|
| SET | Latch (ON) | | | | | |
| **Operand** | X0~X17 | Y0~Y17 | M0~M159 | T0~15 | C0~C7 | D0~D29 |
| | -- | ✓ | ✓ | -- | -- | -- |

Explanations:

When the SET command is driven, its specific device is set to be “ON,” which will keep “ON” whether the SET command is still driven. You can use the RST command to set the device to “OFF”.

Program Example:

Ladder diagram:

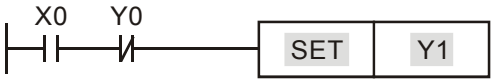


| Command code: | | Operation: |
|---|---|---|
| LD | X0 | Load contact A of X0 |
| ANI | Y0 | Connect to contact B of Y0 in series |
| **SET** | **Y1** | Y1 latch (ON) |

| **Mnemonic** | **Function** | | | | | |
|---|---|---|---|---|---|---|
| RST | Clear the contacts or the registers | | | | | |
| **Operand** | X0~X17 | Y0~Y17 | M0~M159 | T0~15 | C0~C7 | D0~D29 |
| | -- | ✓ | ✓ | ✓ | ✓ | -- |

Explanations:
When the RST command is driven, motion of its specific device is as follows:

| **Device** | **Status** |
|---|---|
| Y, M | Coil and contact will be set to “OFF”. |
| T, C | Present values of the timer or counter will be set to 0, and the coil and contact will be set to “OFF.” |
| D | The content value will be set to 0. |

Program Example:

Ladder diagram:

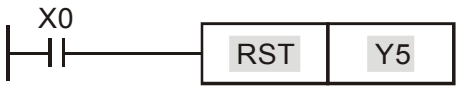


| Command code: | | Operation: |
|---|---|---|
| LD | X0 | Load contact A of X0 |
| **RST** | **Y5** | Clear contact Y5 |

| **Mnemonic** | **Function** | |
|---|---|---|
| TMR | 16-bit timer | |
| **Operand** | T-K | T0~T15, K0~K32,767 |
| | T-D | T0~T15, D0~D29 |

Explanations:
When TMR command is executed, the specific coil of timer is ON and timer will start to count. When the setting value of timer is attained (counting value >= setting value), the contact will be as following:

| | |
|---|---|
| NO(Normally Open) contact | Close |
| NC(Normally Closed) contact | Open |

Program Example:

Ladder diagram:

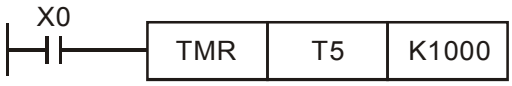


| Command code: | | Operation: |
|---|---|---|
| LD | X0 | Load contact A of X0 T5 timer |
| **TMR** | **T5 K1000** | Setting is K1000 |

| **Mnemonic** | **Function** | |
|---|---|---|
| CNT | 16-bit counter | |
| **Operand** | C-K | C0~C7, K0~K32,767 |
| | C-D | C0~C7, D0~D29 |

Explanations:

1. When the CNT command is executed from OFF→ON, which means that the counter coil is driven, and 1 should thus be added to the counter's value; when the counter achieved specific set value (value of counter = the setting value), motion of the contact is as follows:

| | |
|---|---|
| NO(Normally Open) contact | Close |
| NC(Normally Closed) contact | Open |

2. If there is counting pulse input after counting is attained, the contacts and the counting values will be unchanged. To re-count or to conduct the CLEAR motion, please use the RST command.

Program Example:

Ladder diagram:

| Command code: | | Operation: |
|---|---|---|
| LD | X0 | Load contact A of X0 C2 counter |
| **CNT** | **C2 K100** | Setting is K100 |

| **Mnemonic** | **Function** |
|---|---|
| MC / MCR | Master control Start/Reset |
| **Operand** | N0~N7 |

Explanations:

1. MC is the main-control start command. When the MC command is executed, the execution of commands between MC and MCR will not be interrupted. When MC command is OFF, the motion of the commands that between MC and MCR is described

as follows:

| | |
|---|---|
| Timer | The counting value is set back to zero, the coil and the contact are both turned OFF |
| Accumulative timer | The coil is OFF, and the timer value and the contact stay at their present condition |
| Subroutine timer | The counting value is back to zero. Both coil and contact are turned OFF. |
| Counter | The coil is OFF, and the counting value and the contact stay at their present condition |
| Coils driven up by the OUT command | All turned OFF |
| Devices driven up by the SET and RST commands | Stay at present condition |
| Application commands | All of them are not acted , but the nest loop FOR-NEXT command will still be executed for times defined by users even though the MC-MCR commands is OFF. |

2. MCR is the main-control ending command that is placed at the end of the main-control program and there should not be any contact commands prior to the MCR command.
3. Commands of the MC-MCR main-control program supports the nest program structure, with 8 layers as its greatest. Please use the commands in order from N0~ N7, and refer to the following:

Program Example:

Ladder diagram:

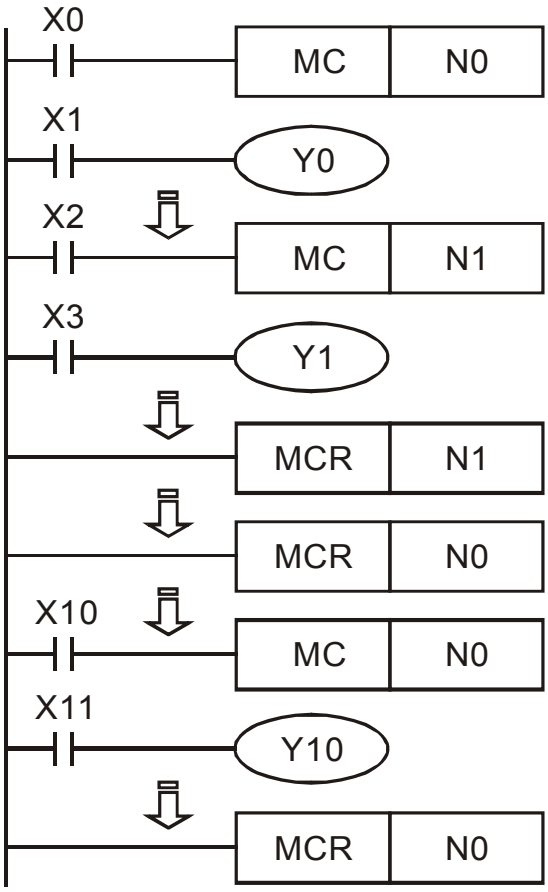


| Command code: | | Operation: |
|---|---|---|
| LD | **X0** | Load A contact of X0 |
| **MC** | **N0** | Enable N0 common series connection contact |
| LD | X1 | Load A contact of X1 |
| OUT | Y0 | Drive Y0 coil |
| : | | |
| LD | X2 | Load A contact of X2 |
| **MC** | **N1** | Enable N1 common series connection contact |
| LD | X3 | Load A contact of X3 |
| OUT | Y1 | Drive Y1 coil |
| : | | |
| **MCR** | **N1** | Disable N1 common series connection contact |
| : | | |
| **MCR** | **N0** | Disable N0 common series connection contact |
| : | | |
| LD | X10 | Load A contact of X10 |
| **MC** | **N0** | Enable N0 common series connection contact |
| LD | X11 | Load A contact of X11 |
| OUT | Y10 | Drive Y10 coil |
| : | | |
| **MCR** | **N0** | Disable N0 common series connection contact |

| Mnemonic | Function | | | | | |
|---|---|---|---|---|---|---|
| LDP | Rising-edge detection operation | | | | | |
| **Operand** | X0~X17 | Y0~Y17 | M0~M159 | T0~15 | C0~C7 | D0~D29 |
| | ✓ | ✓ | ✓ | ✓ | ✓ | -- |

Explanations:
Usage of the LDP command is the same as the LD command, but the motion is different. It is used to reserve present contents and at the same time, saving the detection status of the acquired contact rising-edge into the accumulative register.

Program Example:

Ladder diagram:

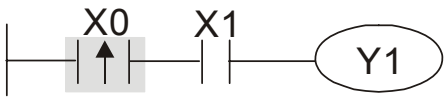


| Command code: | | Operation: |
|---|---|---|
| **LDP** | **X0** | Start X0 rising-edge detection |
| AND | X1 | Series connection A contact of X1 |
| OUT | Y1 | Drive Y1 coil |

| Mnemonic | Function | | | | | |
|---|---|---|---|---|---|---|
| LDF | Falling-edge detection operation | | | | | |
| **Operand** | X0~X17 | Y0~Y17 | M0~M159 | T0~15 | C0~C7 | D0~D29 |
| | ✓ | ✓ | ✓ | ✓ | ✓ | -- |

Explanations:
Usage of the LDF command is the same as the LD command, but the motion is different. It is used to reserve present contents and at the same time, saving the detection status of the acquired contact falling-edge into the accumulative register.
Program Example:

Ladder diagram:

| Command code: | | Operation: |
|---|---|---|
| **LDF** | **X0** | Start X0 falling-edge detection |
| AND | X1 | Series connection A contact of X1 |
| OUT | Y1 | Drive Y1 coil |

| Mnemonic | Function | | | | | |
|---|---|---|---|---|---|---|
| ANDP | Rising-edge series connection | | | | | |
| **Operand** | X0~X17 | Y0~Y17 | M0~M159 | T0~15 | C0~C7 | D0~D29 |
| | ✓ | ✓ | ✓ | ✓ | ✓ | -- |

Explanations:
ANDP command is used in the series connection of the contacts' rising-edge detection.

Program Example:

Ladder diagram:

| Command code: | | Operation: |
|---|---|---|
| LD | **X0** | Load A contact of X0 |
| **ANDP** | **X1** | X1 rising-edge detection in series connection |
| OUT | Y1 | Drive Y1 coil |

| Mnemonic | Function | | | | | |
|---|---|---|---|---|---|---|
| ANDF | Falling-edge series connection | | | | | |
| **Operand** | X0~X17 | Y0~Y17 | M0~M159 | T0~15 | C0~C7 | D0~D29 |
| | ✓ | ✓ | ✓ | ✓ | ✓ | -- |

Explanations:
ANDF command is used in the series connection of the contacts' falling-edge detection.

Program Example:

Ladder diagram:

| Command code: | | Operation: |
|---|---|---|
| LD | **X0** | Load A contact of X0 |
| **ANDF** | **X1** | X1 falling-edge detection in series connection |
| OUT | Y1 | Drive Y1 coil |

| Mnemonic | Function | | | | | |
|---|---|---|---|---|---|---|
| ORP | Rising-edge parallel connection | | | | | |
| **Operand** | X0~X17 | Y0~Y17 | M0~M159 | T0~15 | C0~C7 | D0~D29 |
| | ✓ | ✓ | ✓ | ✓ | ✓ | -- |

Explanations:
The ORP commands are used in the parallel connection of the contact's rising-edge detection.

Program Example:

Ladder diagram:

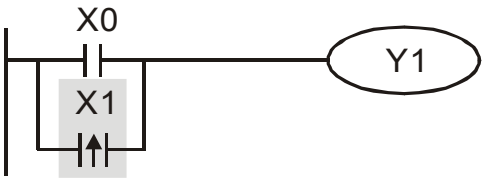


| Command code: | | Operation: |
|---|---|---|
| LD | **X0** | Load A contact of X0 |
| **ORP** | **X1** | X1 rising-edge detection in parallel connection |
| OUT | Y1 | Drive Y1 coil |

| **Mnemonic** | **Function** | | | | | |
|---|---|---|---|---|---|---|
| ORF | Falling-edge parallel connection | | | | | |
| **Operand** | X0~X17 | Y0~Y17 | M0~M159 | T0~15 | C0~C7 | D0~D29 |
| | ✓ | ✓ | ✓ | ✓ | ✓ | -- |

Explanations:
The ORP commands are used in the parallel connection of the contact's falling-edge detection.

Program Example:

Ladder diagram:

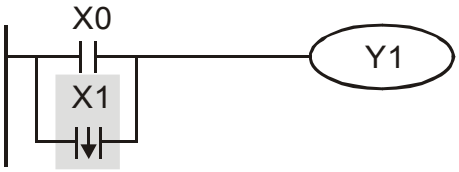


| Command code: | | Operation: |
|---|---|---|
| LD | **X0** | Load A contact of X0 |
| **ORF** | **X1** | X1 falling-edge detection in parallel connection |
| OUT | Y1 | Drive Y1 coil |

| **Mnemonic** | **Function** | | | | | |
|---|---|---|---|---|---|---|
| PLS | Rising-edge output | | | | | |
| **Operand** | X0~X17 | Y0~Y17 | M0~M159 | T0~15 | C0~C7 | D0~D29 |
| | -- | ✓ | ✓ | -- | -- | -- |

Explanations:
When X0=OFF→ON (rising-edge trigger), PLS command will be executed and M0 will send the pulse of one time which the length is a scan time.
Program Example:

Ladder diagram:

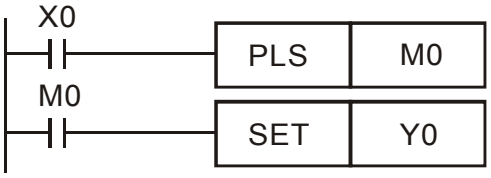


| Command code: | | Operation: |
|---|---|---|
| LD | **X0** | Load A contact of X0 |
| **PLS** | **M0** | M0 rising-edge output |
| LD | M0 | Load the contact A of M0 |

Timing Diagram: SET Y0 Y0 latched (ON)

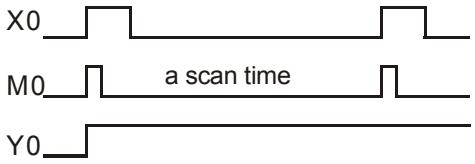


| Mnemonic | Function | | | | | |
|---|---|---|---|---|---|---|
| PLF | Falling-edge output | | | | | |
| **Operand** | X0~X17 | Y0~Y17 | M0~M159 | T0~15 | C0~C7 | D0~D29 |
| | -- | ✓ | ✓ | -- | -- | -- |

Explanations:
When X0= ON→OFF (falling-edge trigger), PLF command will be executed and M0 will send the pulse of one time which the length is the time for scan one time.

Program Example:

Ladder diagram:

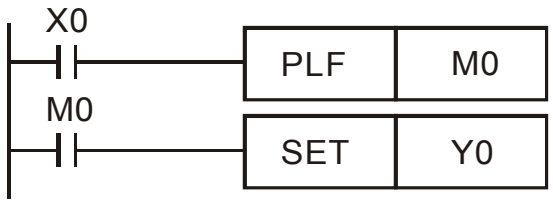


| Command code: | | Operation: |
|---|---|---|
| LD | **X0** | Load A contact of X0 |
| **PLF** | **M0** | M0 falling-edge output |
| LD | M0 | Load the contact A of M0 |
| SET | Y0 | Y0 latched (ON) |

Timing Diagram:

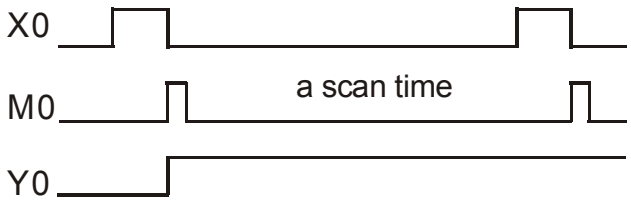


| Mnemonic | Function |
|---|---|
| END | Program End |
| **Operand** | None |

Explanations:
It needs to add the END command at the end of ladder diagram program or command program. PLC will scan from address o to END command, after executing it will return to address 0 to scan again.

## D.5.9 Description of the Application Commands

| | API | Mnemonic Codes | | P Command | Function | Steps | |
|---|---|---|---|---|---|---|---|
| | | 16 bits | 32 bits | | | 16-bit | 32-bit |
| Transmission Comparison | 10 | CMP | -- | ✓ | Compare | 7 | -- |
| | 11 | ZCP | -- | ✓ | Zone compare | 9 | -- |
| | 12 | MOV | -- | ✓ | Data Move | 5 | -- |
| | 15 | BMOV | -- | ✓ | Block move | 7 | -- |
| Four Fundamental Operations of Arithmetic | 20 | ADD | -- | ✓ | Perform the addition of BIN data | 7 | -- |
| | 21 | SUB | -- | ✓ | Perform the subtraction of BIN data | 7 | -- |
| | 22 | MUL | -- | ✓ | Perform the multiplication of BIN data | 7 | -- |
| | 23 | DIV | -- | ✓ | Perform the division of BIN data | 7 | -- |
| | 24 | INC | -- | ✓ | Perform the addition of 1 | 3 | -- |
| | 25 | DEC | -- | ✓ | Perform the subtraction of 1 | 3 | -- |
| Rotation and Displacement | 30 | ROR | -- | ✓ | Rotate to the right | 5 | -- |
| | 31 | ROL | -- | ✓ | Rotate to the left | 5 | -- |
| Special command for AC motor drive | 53 | -- | DHSCS | X | High speed counter enable | -- | 13 |
| | 139 | RPR | -- | ✓ | Control PID parameters of inverter | 5 | -- |
| | 140 | WPR | -- | ✓ | Control frequency of inverter | 5 | -- |
| | 141 | FPID | -- | ✓ | Read the parameter | 9 | -- |
| | 142 | FREQ | -- | ✓ | Write the parameter | 7 | -- |

## D.5.10 Explanation for the Application Commands

| API | Mnemonic | | | Operands | Function |
|---|---|---|---|---|---|
| 10 | | CMP | P | $S_1$, $S_2$, D | Compare |

| Type / OP | Bit Devices | | | Word devices | | | | | | | | Program Steps |
|---|---|---|---|---|---|---|---|---|---|---|---|---|
| | X | Y | M | K | H | KnX | KnY | KnM | T | C | D | CMP, CMPP: 7 steps |
| $S_1$ | | | | * | * | * | * | * | * | * | * | |
| $S_2$ | | | | * | * | * | * | * | * | * | * | |
| D | | * | * | | | | | | | | | |

Operands:
S1: Comparison Value 1 S2: Comparison Value 2 D: Comparison result

Explanations:

1. Operand D occupies 3 consecutive devices.
2. See the specifications of each model for their range of use.
3. The contents in S1 and S2 are compared and the result will be stored in D.
4. The two comparison values are compared algebraically and the two values are signed binary values. When b15 = 1 in 16-bit instruction, the comparison will regard the value as negative binary values.

Program Example:

1. Designate device Y0, and operand D automatically occupies Y0, Y1, and Y2.
2. When X10 = On, CMP instruction will be executed and one of Y0, Y1, and Y2 will be On. When X10 = Off, CMP instruction will not be executed and Y0, Y1, and Y2 remain their status before X10 = Off.
3. If the user need to obtain a comparison result with ≥ ≤, and ≠, make a series parallel connection between Y0 ~ Y2.

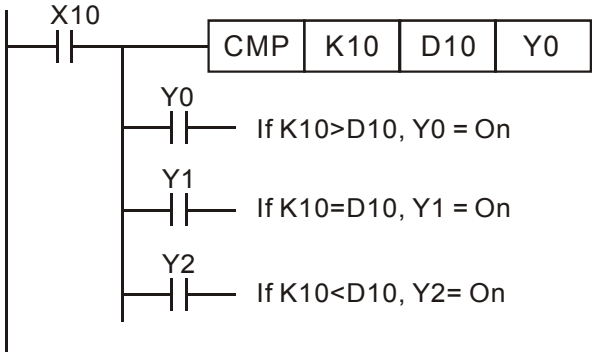


4. To clear the comparison result, use RST instruction.

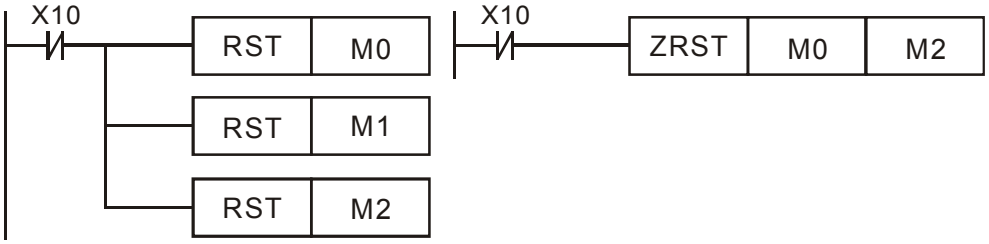

| API | Mnemonic | | | Operands | Function |
|---|---|---|---|---|---|
| 11 | | ZCP | P | $S_1$, $S_2$, S, D | Zone Compare |

| Type / OP | Bit Devices | | | Word devices | | | | | | | | Program Steps |
|---|---|---|---|---|---|---|---|---|---|---|---|---|
| | X | Y | M | K | H | KnX | KnY | KnM | T | C | D | ZCP, ZCPP: 9 steps |
| $S_1$ | | | | * | * | * | * | * | * | * | * | |
| $S_2$ | | | | * | * | * | * | * | * | * | * | |
| S | | | | * | * | * | * | * | * | * | * | |
| D | | * | * | | | | | | | | | |

Operands:
S1: Lower bound of zone comparison S2: Upper bound of zone comparison S: Comparison value
D: Comparison result

Explanations:
1. The content in S1 should be smaller than the content in S2.
2. Operand D occupies 3 consecutive devices.
3. See the specifications of each model for their range of use.
4. S is compared with its S1 S2 and the result is stored in D.
5. When S1 > S2, the instruction performs comparison by using S1 as the lower/upper bound.
6. The two comparison values are compared algebraically and the two values are signed binary values. When b15 = 1 in 16-bit instruction or b31 = 1 in 32-bit instruction, the comparison will regard the value as negative binary values.

Program Example:
1. Designate device M0, and operand D automatically occupies M0, M1 and M2.
2. When X0 = On, ZCP instruction will be executed and one of M0, M1, and M2 will be On. When X0 = Off, ZCP instruction will not be executed and M0, M1, and M2 remain their status before X0 = Off.

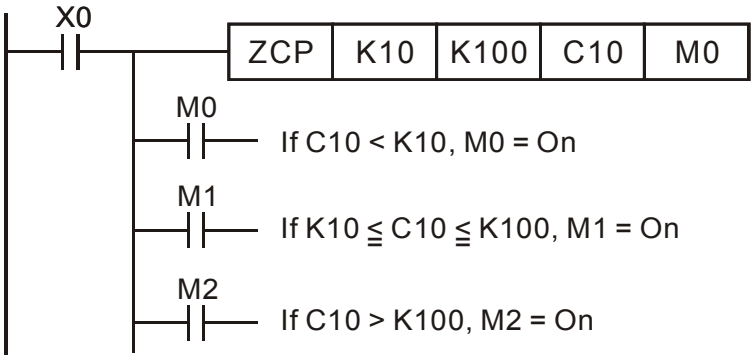


3. To clear the comparison result, use RST instruction.

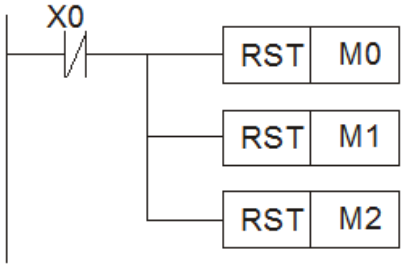

| API | Mnemonic | | | Operands | Function |
|---|---|---|---|---|---|
| 12 | | MOV | P | S, D | Move |

| Type / OP | Bit Devices | | | Word devices | | | | | | | | Program Steps |
|---|---|---|---|---|---|---|---|---|---|---|---|---|
| | X | Y | M | K | H | KnX | KnY | KnM | T | C | D | MOV, MOVP: 5 steps |
| S | | | | * | * | * | * | * | * | * | * | |
| D | | | | | | | * | * | * | * | * | |

Operands:
S: Source of data  D: Destination of data
Explanations:

1. See the specifications of each model for their range of use.
2. When this instruction is executed, the content of S will be moved directly to D. When this instruction is not executed, the content of D remains unchanged.

Program Example:
MOV instruction has to be adopted in the moving of 16-bit data.

1. When X0 = Off, the content in D10 will remain unchanged. If X0 = On, the value K10 will be moved to D10 data register.
2. When X1 = Off, the content in D10 will remain unchanged. If X1 = On, the present value T0 will be moved to D10 data register.

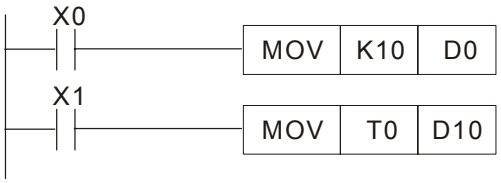


| API | Mnemonic | | | Operands | Function |
|---|---|---|---|---|---|
| 15 | | BMOV | P | S, D, n | Block Move |

| Type / OP | Bit Devices | | | Word devices | | | | | | | | Program Steps |
|---|---|---|---|---|---|---|---|---|---|---|---|---|
| | X | Y | M | K | H | KnX | KnY | KnM | T | C | D | BMOV, BMOVP: 7 steps |
| S | | | | | | * | * | * | * | * | * | |
| D | | | | | | | * | * | * | * | * | |
| n | | | | * | * | | | | * | * | * | |

Operands:
S: Start of source devices  D: Start of destination devices  n: Number of data to be moved
Explanations:

1. Range of **n**: 1 ~ 512

2. See the specifications of each model for their range of use.
3. The contents in n registers starting from the device designated by S will be moved to n registers starting from the device designated by D. If n exceeds the actual number of available source devices, only the devices that fall within the valid range will be used.

Program Example 1:
When X10 = On, the contents in registers D0 ~ D3 will be moved to the 4 registers D20 ~ D23.

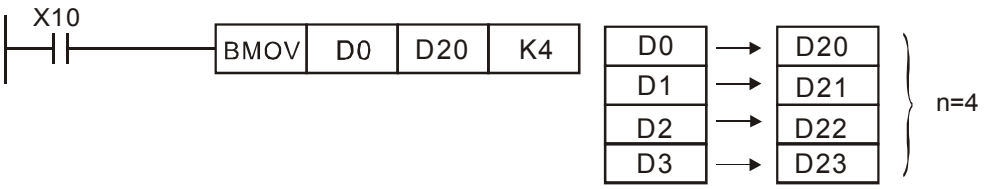


Program Example 2:
Assume the bit devices KnX, KnY, KnM and KnS are designated for moving, the number of digits of S and D has to be the same, i.e. their n has to be the same.

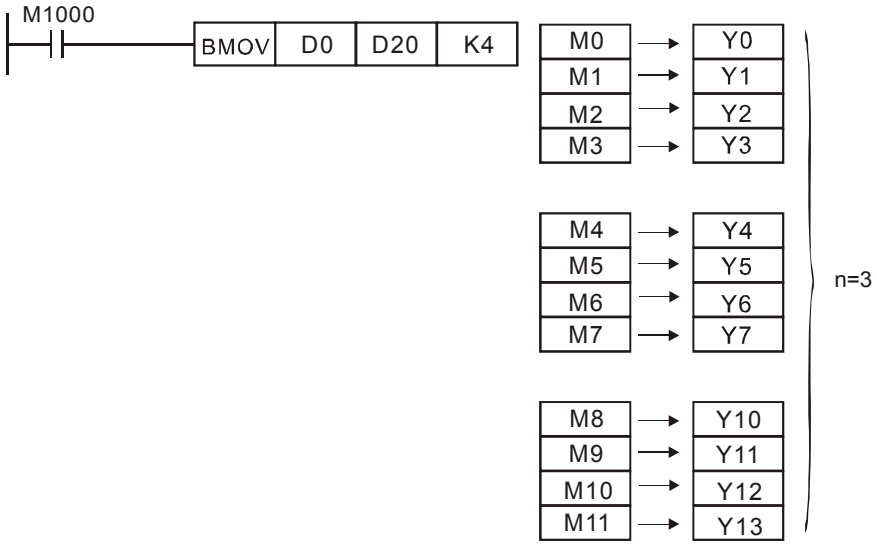

| API | Mnemonic | | | Operands | Function |
|---|---|---|---|---|---|
| 20 | | ADD | **P** | $S_1$, $S_2$, D | Addition |

| Type / OP | Bit Devices | | | Word devices | | | | | | | | Program Steps |
|---|---|---|---|---|---|---|---|---|---|---|---|---|
| | X | Y | M | K | H | KnX | KnY | KnM | T | C | D | ADD, ADDP: 7 steps |
| $S_1$ | | | | * | * | * | * | * | * | * | * | |
| $S_2$ | | | | * | * | * | * | * | * | * | * | |
| D | | | | | | | * | * | * | * | * | |

Operands:
S1: Summand  S2: Addend  D: Sum

Explanations:

1. See the specifications of each model for their range of use.
2. This instruction adds S1 and S2 in BIN format and store the result in D.
3. The highest bit is symbolic bit 0 (+) and 1 (-), which is suitable for algebraic addition, e.g. 3 + (-9) = -6.
4. Flag changes in binary addition
   16-bit command:
   A. If the operation result = 0, zero flag M1020 = On.
   B. If the operation result < -32,768, borrow flag M1021 = On.
   C. If the operation result > 32,767, carry flag M1022 = On.

Program Example 1:
16-bit command:
When X0 = On, the content in D0 will plus the content in D10 and the sum will be stored in D20.

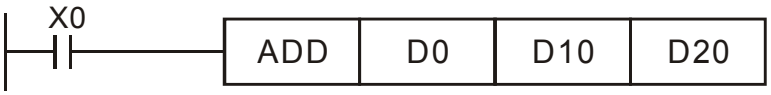

Remarks:
Flags and the positive/negative sign of the values:

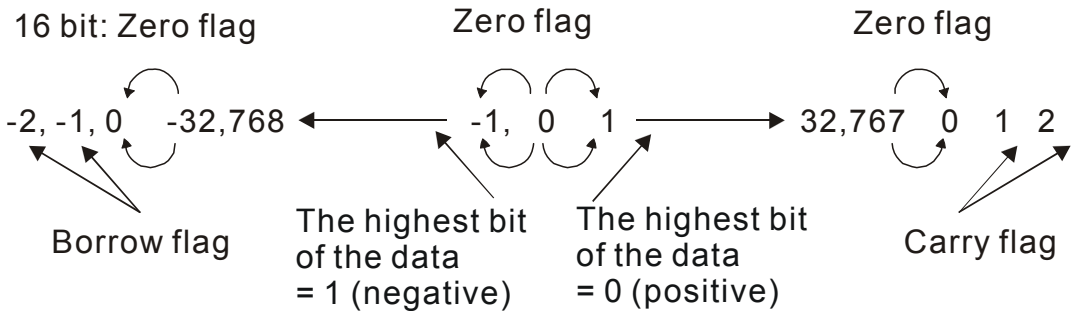

| API | Mnemonic | | | Operands | Function |
|---|---|---|---|---|---|
| 21 | | SUB | **P** | $S_1$, $S_2$, D | Subtraction |

| Type / OP | Bit Devices | | | Word devices | | | | | | | | Program Steps |
|---|---|---|---|---|---|---|---|---|---|---|---|---|
| | X | Y | M | K | H | KnX | KnY | KnM | T | C | D | SUB, SUBP: 7 steps<br>DSUB, DSUBP: 13 steps |
| $S_1$ | | | | * | * | * | * | * | * | * | * | |
| $S_2$ | | | | * | * | * | * | * | * | * | * | |
| D | | | | | | | * | * | * | * | * | |

Operands:
S1: Minuend S2: Subtrahend D: Remainder
Explanations:

1. This instruction subtracts S1 and S2 in BIN format and stores the result in D.
2. The highest bit is symbolic bit 0 (+) and 1 (-), which is suitable for algebraic subtraction.
3. Flag changes in binary subtraction

   In 16-bit instruction:

   A. If the operation result ＝ 0, zero flag M1020 = On.

   B. If the operation result ＜ -32,768, borrow flag M1021 = On.

   C. If the operation result ＞ 32,767, carry flag M1022 = On.

Program Example:
In 16-bit BIN subtraction:
When X0 = On, the content in D0 will minus the content in D10 and the remainder will be stored in D20.

| API | Mnemonic | | | Operands | Function |
|---|---|---|---|---|---|
| 22 | | MUL | P | $S_1$, $S_2$, D | Multiplication |

| Type / OP | Bit Devices | | | Word devices | | | | | | | | Program Steps |
|---|---|---|---|---|---|---|---|---|---|---|---|---|
| | X | Y | M | K | H | KnX | KnY | KnM | T | C | D | MUL, DMULP: 7 steps |
| $S_1$ | | | | * | * | * | * | * | * | * | * | |
| $S_2$ | | | | * | * | * | * | * | * | * | * | |
| D | | | | | | | * | * | * | * | * | |

Operands:
S1: Multiplicand S2: Multiplicator D: Product
Explanations:

1. In 16-bit instruction, D occupies 2 consecutive devices.
2. This instruction multiplies S1 by S2 in BIN format and stores the result in D. Be careful with the positive/negative signs of S1, S2 and D when doing 16-bit and 32-bit operations.

16-bit command:

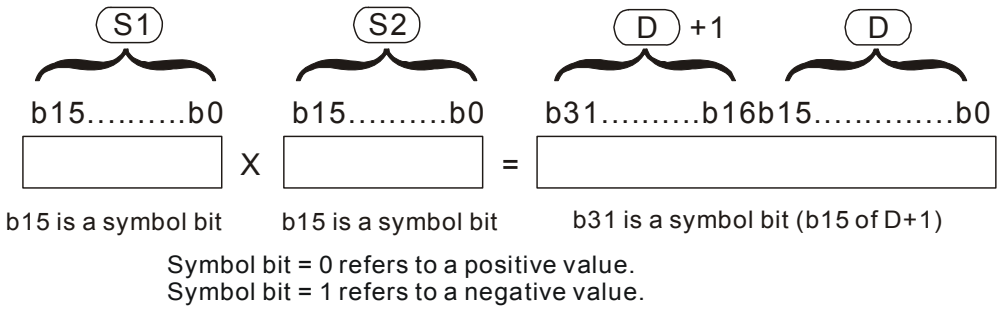


When D serves as a bit device, it can designate K1 ~ K4 and construct a 16-bit result, occupying consecutive 2 groups of 16-bit data.

Program Example:
The 16-bit D0 is multiplied by the 16-bit D10 and brings forth a 32-bit product. The higher 16 bits are stored in D21 and the lower 16-bit are stored in D20. On/Off of the most left bit indicates the positive/negative status of the result value.

| API | Mnemonic | | | Operands | Function |
|---|---|---|---|---|---|
| 23 | | DIV | P | $S_1$, $S_2$, D | Division |

| Type / OP | Bit Devices | | | Word devices | | | | | | | | Program Steps |
|---|---|---|---|---|---|---|---|---|---|---|---|---|
| | X | Y | M | K | H | KnX | KnY | KnM | T | C | D | DIV, DIVP: 7 steps |
| $S_1$ | | | | * | * | * | * | * | * | * | * | |
| $S_2$ | | | | * | * | * | * | * | * | * | * | |
| D | | | | | | | * | * | * | * | * | |

Operands:
$S_1$: Dividend $S_2$: Divisor D: Quotient and remainder
Explanations:

1. In 16-bit instruction, **D** occupies 2 consecutive devices.
2. This instruction divides $\mathbf{S_1}$ and $\mathbf{S_2}$ in BIN format and stores the result in **D**. Be careful with the positive/negative signs of $\mathbf{S_1}$, $\mathbf{S_2}$ and **D** when doing 16-bit and 32-bit operations.

   16-bit instruction:

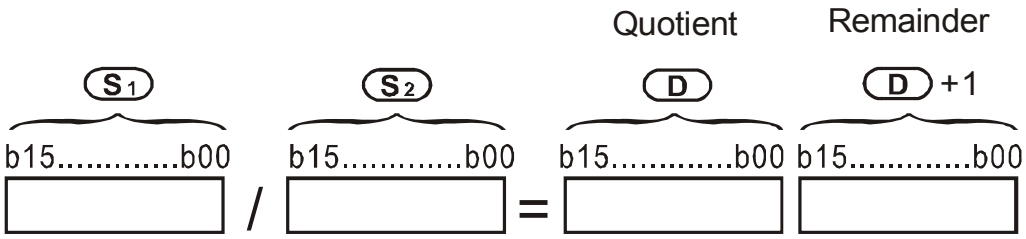


Program Example:
When X0 = On, D0 will be divided by D10 and the quotient will be stored in D20 and remainder in D21. On/Off of the highest bit indicates the positive/negative status of the result value.

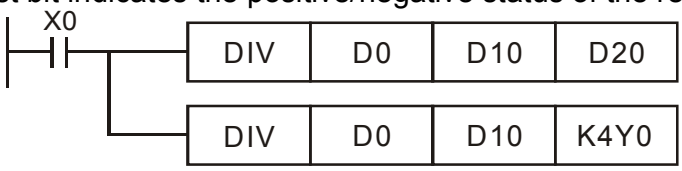

| API | Mnemonic | | | Operands | Function |
|---|---|---|---|---|---|
| 24 | | INC | P | D | Increment |

| Type / OP | Bit Devices | | | Word devices | | | | | | | | Program Steps |
|---|---|---|---|---|---|---|---|---|---|---|---|---|
| | X | Y | M | K | H | KnX | KnY | KnM | T | C | D | INC, INCP: 3 steps |
| D | | | | | | | * | * | * | * | * | |

Operands:
D: Destination device
Explanations:

1. If the instruction is not a pulse execution one, the content in the designated device D will plus “1” in every scan period whenever the instruction is executed.
2. This instruction adopts pulse execution instructions (INCP).
3. In 16-bit operation, 32,767 pluses 1 and obtains -32,768.

Program Example:
When X0 goes from Off to On, the content in D0 pluses 1 automatically.

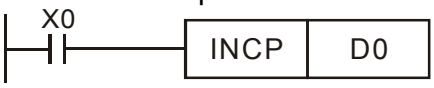


| API | Mnemonic | | | Operands | Function |
|---|---|---|---|---|---|
| 25 | | DEC | P | D | Decrement |

| Type / OP | Bit Devices | | | Word devices | | | | | | | | Program Steps |
|---|---|---|---|---|---|---|---|---|---|---|---|---|
| | X | Y | M | K | H | KnX | KnY | KnM | T | C | D | DEC, DECP: 3 steps |
| D | | | | | | | * | * | * | * | * | |

Operands:
D: Destination
Explanations:

1. If the instruction is not a pulse execution one, the content in the designated device D will minus “1” in every scan period whenever the instruction is executed.
2. This instruction adopts pulse execution instructions (DECP).
3. In 16-bit operation, -32,768 minuses 1 and obtains 32,767.

Program Example:
When X0 goes from Off to On, the content in D0 minuses 1 automatically.

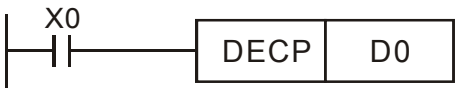


| API | Mnemonic | | | Operands | Function |
|---|---|---|---|---|---|
| 30 | | ROR | P | D, n | Rotate to the Right |

| Type / OP | Bit Devices | | | Word devices | | | | | | | | Program Steps |
|---|---|---|---|---|---|---|---|---|---|---|---|---|
| | X | Y | M | K | H | KnX | KnY | KnM | T | C | D | ROR, RORP: 5 steps |
| D | | | | | | | * | * | * | * | * | |
| n | | | | * | * | | | | | | | |

Operands:
D: Device to be rotated  n: Number of bits to be rotated in 1 rotation
Explanations:

1. This instruction rotates the device content designated by **D** to the right for **n** bits.
2. This instruction adopts pulse execution instructions (RORP).

Program Example:
When X0 goes from Off to On, the 16 bits (4 bits as a group) in D10 will rotate to the right, as shown in the figure below. The bit marked with ※ will be sent to carry flag M1022.

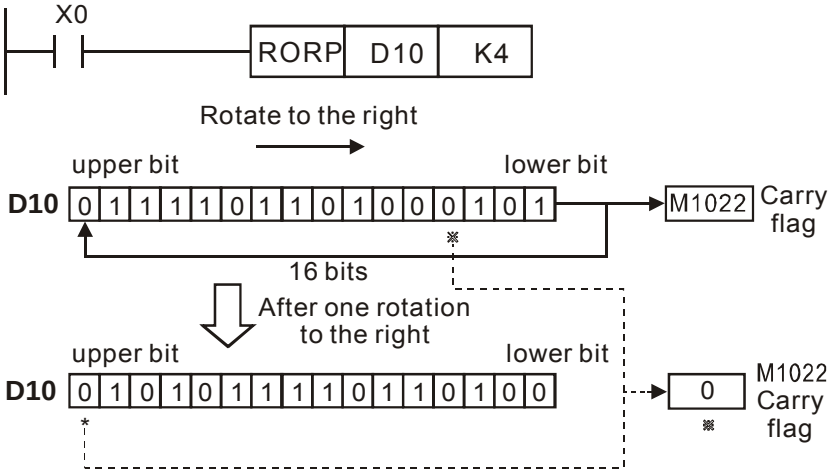

| API | Mnemonic | | | Operands | Function |
|---|---|---|---|---|---|
| 31 | | ROL | P | D, n | Rotate to the Left |

| Type / OP | Bit Devices | | | Word devices | | | | | | | | Program Steps |
|---|---|---|---|---|---|---|---|---|---|---|---|---|
| | X | Y | M | K | H | KnX | KnY | KnM | T | C | D | ROL, ROLP: 5 steps |
| D | | | | | | | * | * | * | * | * | |
| n | | | | * | * | | | | | | | |

Operands:
D: Device to be rotated  n: Number of bits to be rotated in 1 rotation
Explanations:

1. This instruction rotates the device content designated by **D** to the left for **n** bits.
2. This instruction adopts pulse execution instructions (ROLP).

Program Example:
When X0 goes from Off to On, the 16 bits (4 bits as a group) in D10 will rotate to the left, as shown in the figure below. The bit marked with ※ will be sent to carry flag M1022.

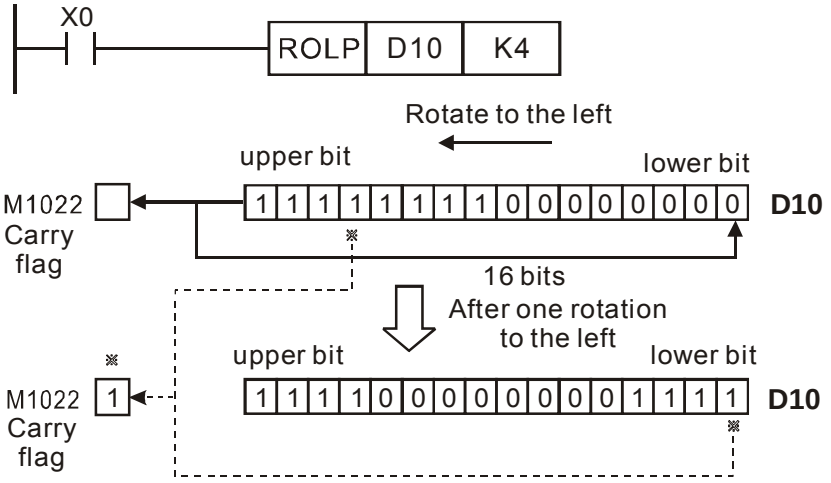

## D.5.11 Special Application Commands for the AC Motor Drive

| API | Mnemonic | | | Operands | Function |
|---|---|---|---|---|---|
| 53 | D | HSCS | | S1, S2, D | Compare (for high-speed counter) |

| Type / OP | Bit Devices | | | Word devices | | | | | | | | Program Steps |
|---|---|---|---|---|---|---|---|---|---|---|---|---|
| | X | Y | M | K | H | KnX | KnY | KnM | T | C | D | DHSCS: 13 steps |
| S1 | | | | * | * | * | * | * | * | * | * | |
| S2 | | | | | | | | | | * | | |
| D | | * | * | | | | | | | | | |

Operands:
S1: Comparison Value S2: High-speed counter C235 D: Comparison result
Explanations:

1. It needs optional PG card to receive external input pulse.
2. To count automatically, please set the target value by using DHSCS command and set M1028=On. The counter C235 will be ON when the count number = target value. If you want to clear C235, please set M1029=ON.
3. Please use rising-edge/falling-edge command, such as LDP/LDF, for the contact condition. Please notice that error may occur when using contact A/B for the contact condition. When M1028 is On, M1018 will be set ON after executing DHSCS command. In addition, M1029 can be sued to clear high speed counter, and M1018 will be cleared as Off after executing.
4. There are three input modes for high-speed counter in the following can be set by D1044.

■ A-B phase mode(4 times frequency )(D1044=0): user can input the A and B pulse through A and B terminal of EME-PG01 for counting. Make sure that $\overline{A}$, $\overline{B}$ and GND are grounding.

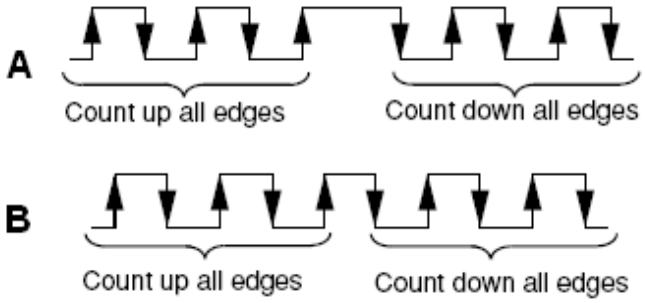

- Pulse + counting direction mode (D1044=1): user can use pulse input and counting direction to execute counting up or down or signal. A terminal of PG feedback card needs to be defined as pulse input, and B terminal as switching between counting up or down. Make sure that $\overline{A}$, $\overline{B}$ and GND are grounding.
- Pulse + internal flag (M1030) mode (D1044=2): user can use pulse input and internal flag (M1030). A terminal of PG feedback card needs to be used for pulse input, and internal flag (M1030) is used for switching between counting up or down. Only A is needed for this mode and make sure that $\overline{A}$, and GND are grounding.

Program Example:

1. Assume that when M100=ON, it is set to A-B phase mode. When M101=ON, it is set to Pulse + counting direction mode. When M102=ON, it is set to Pulse + internal flag (M1030) mode.
2. M1030 is used to set to count up (OFF) and count down (ON).
3. If M0 goes from OFF to ON, DHSCS command starts to execute the comparison of high-speed counter. When C235 goes from H'2 to H'3 or from H'4 to H'3, M3 will be always be ON.
4. If M1 goes from OFF to ON, DHSCS command starts to execute the comparison of high-speed counter. When C235 goes from H'1004F to H'10050 or from H'10051 to H'10050, M2 will be always be ON.
5. M1028: it is used to enable(ON)/disable(OFF) the high-speed counter function.
6. M1029: it is used to clear the high-speed counter.
7. M1018: it is used to start high-speed counter function. (when M1028 is ON).
8. D1025: the low word of high-speed counter C235.
9. D1026: the high word of high-speed counter C235.

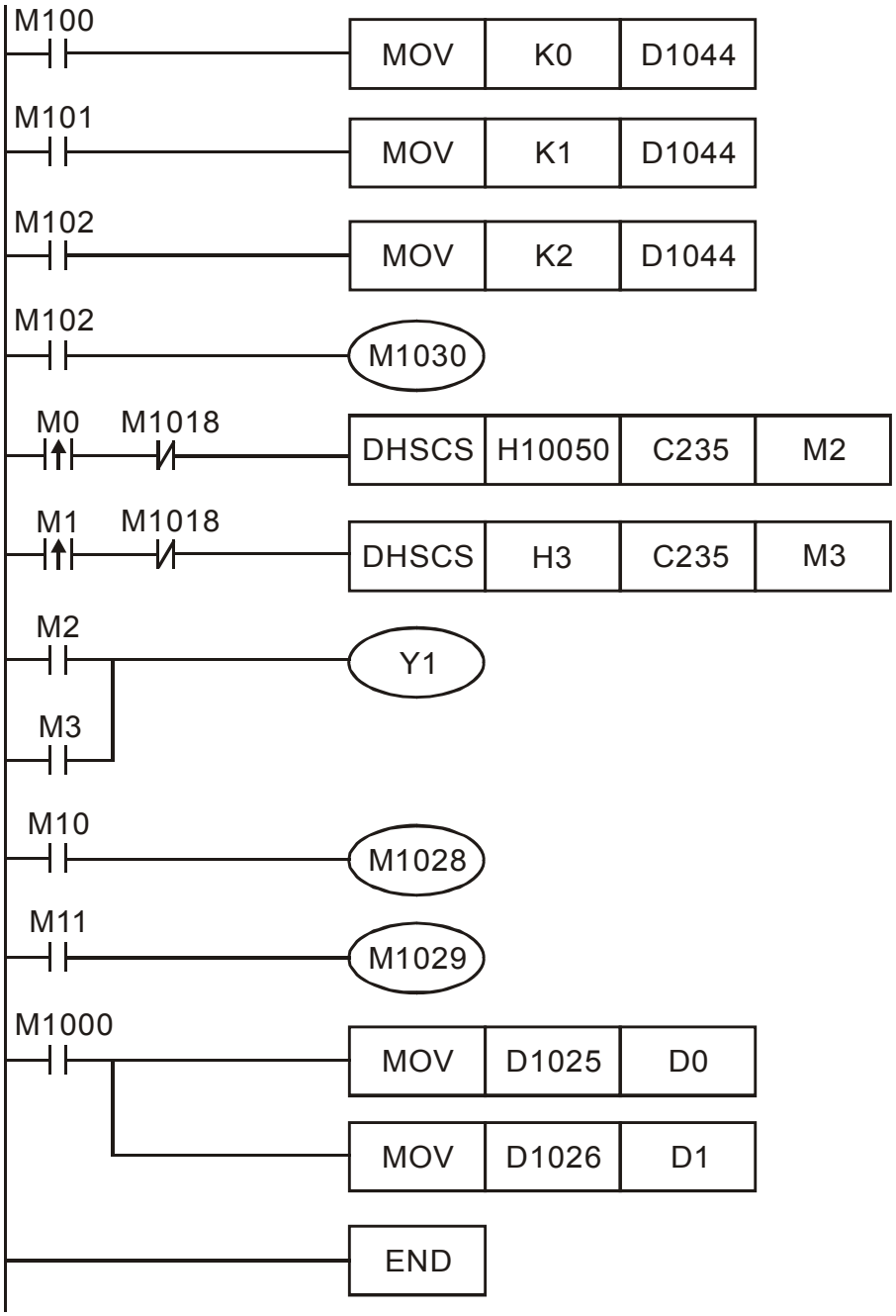

| API | Mnemonic | | | Operands | Function |
|---|---|---|---|---|---|
| 139 | | RPR | P | S1, S2 | Read the AC motor drive's parameters |

| Type / OP | Bit Devices | | | Word devices | | | | | | | | Program Steps |
|---|---|---|---|---|---|---|---|---|---|---|---|---|
| | X | Y | M | K | H | KnX | KnY | KnM | T | C | D | RPR, RPRP: 5 steps |
| S1 | | | | * | * | | | | | | * | |
| S2 | | | | | | | | | | | * | |

Operands:
S1: Data address for reading S2: Register that saves the read data

| API | Mnemonic | | | Operands | Function |
|---|---|---|---|---|---|
| 140 | | WPR | P | S1, S2 | Write the AC motor drive's parameters |

| Type / OP | Bit Devices | | | Word devices | | | | | | | | Program Steps |
|---|---|---|---|---|---|---|---|---|---|---|---|---|
| | X | Y | M | K | H | KnX | KnY | KnM | T | C | D | WPR, WPRP: 5 steps |
| S1 | | | | * | * | | | | | | * | |
| S2 | | | | * | * | | | | | | * | |

Operands:
S1: Data address for writing S2: Register that saves the written data
Program Example:

1. Assume that it will read the data from MODBUS address H2100, and then write to D0; read from H2101 and write to D0.
2. When M0=ON, it will write the data in D10 to the MODBUS address H2001 of the VFD-E.
3. When M1=ON, it will write the data in H2 to the MODBUS address H2000 of the VFD-E, i.e. start the AC motor drive.
4. When M2=ON, it will write the data in H1 to the MODBUS address H2000 of the VFD-E, i.e. stop the AC motor drive.
5. When data is written successfully, M1017 will be ON.
6. When writing parameters, the allowable times to revise a parameter is $10^6$ times. A memory write error may occur at EEPROM if parameters are written too often.

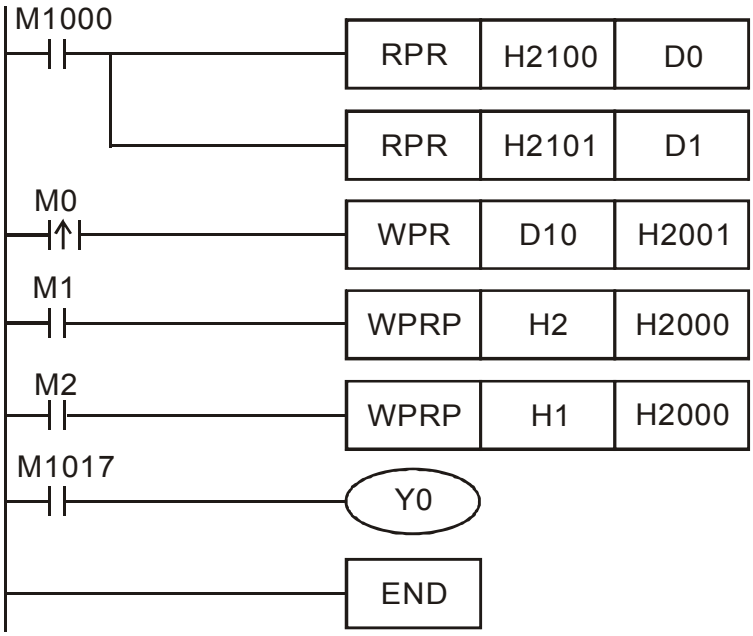


| API | | Mnemonic | | Operands | Function |
|---|---|---|---|---|---|
| 141 | | FPID | P | S1, S2, S3, S4 | PID control for the AC motor drive |

| Type / OP | Bit Devices | | | Word devices | | | | | | | | Program Steps |
|---|---|---|---|---|---|---|---|---|---|---|---|---|
| | X | Y | M | K | H | KnX | KnY | KnM | T | C | D | FPID, FPIDP: 9 steps |
| S1 | | | | * | * | | | | | | * | |
| S2 | | | | * | * | | | | | | * | |
| S3 | | | | * | * | | | | | | * | |
| S4 | | | | * | * | | | | | | * | |

Operands:
S1: PID Set Point Selection(0-4), S2: Proportional gain P (0-100), S3: Integral Time I (0-10000), S4: Derivative control D (0-100)

Explanation:

1. This command FPID can control the PID parameters of the AC motor drive directly, including Pr.10.00 PID set point selection, Pr.10.02 Proportional gain (P), Pr.10.03 Integral time (I) and Pr.10.04 Derivative control (D)

Program Example:

1. Assume that when M0=ON, S1 is set to 0 (PID function is disabled), S2=0, S3=1 (unit: 0.01 seconds) and S4=1 (unit: 0.01 seconds).
2. Assume that when M1=ON, S1 is set to 0 (PID function is disabled), S2=1 (unit: 0.01), S3=0 and S4=0.
3. Assume that when M2=ON, S1 is set to 1(frequency is inputted by digital keypad), S2=1 (unit: 0.01), S3=0 and S4=0.
4. D1027: frequency command controlled by PID.

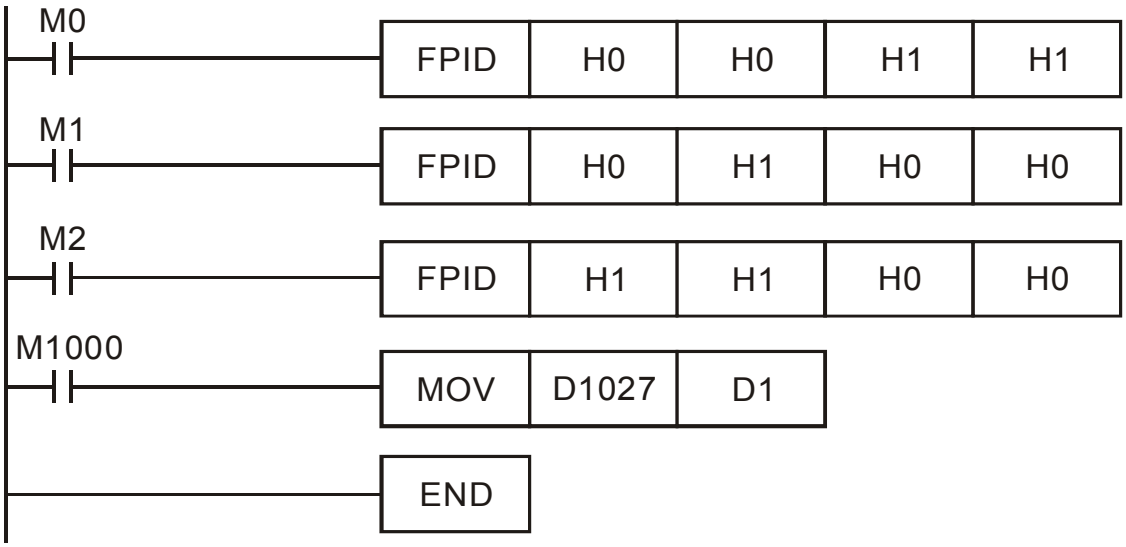


| API | Mnemonic | | | Operands | Function |
|---|---|---|---|---|---|
| 142 | | FREQ | P | S1, S2, S3 | Speed control of the AC motor drive |

| Type / OP | Bit Devices | | | Word devices | | | | | | | | Program Steps |
|---|---|---|---|---|---|---|---|---|---|---|---|---|
| | X | Y | M | K | H | KnX | KnY | KnM | T | C | D | FREQ, FREQP: 7 steps |
| S1 | | | | * | * | | | | | | * | |
| S2 | | | | * | * | | | | | | * | |
| S3 | | | | * | * | | | | | | * | |

Operands:

S1: frequency command, S2: acceleration time, S3: deceleration time

Explanation:

1. This command can control frequency command, acceleration time and deceleration time of the AC motor drive. Please use M1025 to RUN(ON)/STOP(OFF) the AC motor drive and use M1025 to control the operation direction: FWD(ON)/REV(OFF).

Program Example:

1. M1025: RUN(ON)/STOP(Off) the AC motor drive. M1026: operation direction of the AC motor drive – FWD(OFF)/REV(ON). M1015: frequency is reached.
2. When M10=ON, setting frequency command of the AC motor drive to K300(3.00Hz) and acceleration/deceleration time is 0.
3. When M11=ON, setting frequency command of the AC motor drive to K3000(30.00Hz), acceleration time is 50 and deceleration time is 60.
4. S2, S3: In the setting of Accel / Decel time, the decimal places are depends on the setting of Pr01.09. When Pr01.09=1, the unit is 0.01 unit.

As shown in the diagram below, S2(Accelerating time) = 50 which means 0.5sec .

S3(Decelerating time) = 60 which means 0.6sec.

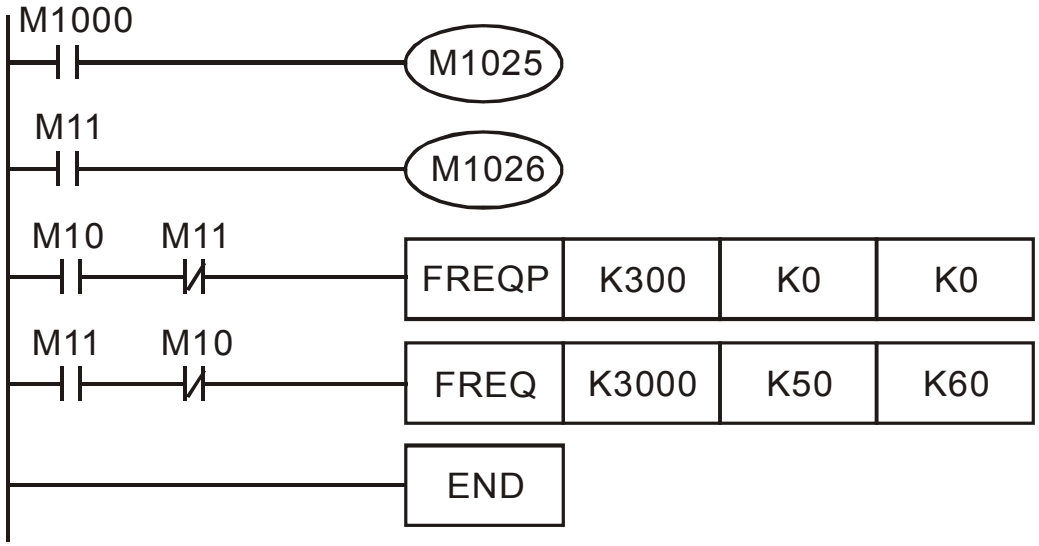

## D.6 Error Code

| Code | ID | Description | Corrective Actions |
|---|---|---|---|
| PLod | 20 | When downloading PLC program the elements of the codes exceed its range, it will show Plod error. For example, the supportive range of T elements is T0~T15, when there is T16 in the syntax, it will show Plod error. | Check if the program is error and download the program again |
| PLSv | 21 | In executing PLC program, it will show PLSv error when PLC would like to write data to appointed address but found the address is unreasonable. | Check if the program is error and download the program again |
| PLdA | 22 | In executing PLC program, it will show PLdA error when external MODBUS read or write unreasonable elements to internal PLC. | Make sure the command from the host controller is correct. |
| PLFn | 23 | In downloading program, it will show PLFn error when it found the unsupportive command. | Make sure if WPL version is too old, and download the latest version from Delta website. |
| PLor | 30 | In executing PLC program, it will show PLor error when it found there is abnormal code inside the program. | Reset PLC program(set 6 in Pr00.02).Power on again and download program again |
| PLFF | 31 | It will show PLFF error when the corresponding command is unreasonable in executing PLC program. | When activating PLC function, it will show PLFF if there is no internal PLC program. It is normal status, and please download the program directly |
| PLSn | 32 | It will show PLSn error when finding check sum is error in executing PLC program | Reset PLC program(set 6 in Pr00.02).Power on again and download program again |
| PLEd | 33 | It will show PLEd error when finding there is no END command in the code in executing PLC program | Reset PLC program(set 6 in Pr00.02).Power on again and download program again |
| PLCr | 34 | The command MC is continuous used more than nine times | Check if the program is error and download the program again |

*ID : Warning code

# Appendix E: CANopen Function

The built-in CANopen function is a kind of remote control. Master can control the AC motor drive by using CANopen protocol. CANopen is a CAN-based higher layer protocol. It provides standardized communication objects, including real-time data (Process Data Objects, PDO), configuration data (Service Data Objects, SDO), and special functions (Time Stamp, Sync message, and Emergency message). And it also has network management data, including Boot-up message, NMT message, and Error Control message. Refer to CiA website http://www.can-cia.org/ for details. The content of this instruction sheet may be revised without prior notice. Please consult our distributors or download the most updated version at http://www.delta.com.tw/industrialautomation

***Delta CANopen supports functions:***

- Support CAN2.0A Protocol;
- Support CANopen DS301 V4.02;
- Support DSP-402 V2.0.

***Delta CANopen supports services:***

- PDO (Process Data Objects): PDO1~ PDO2
- SDO (Service Data Object):
  Initiate SDO Download;
  Initiate SDO Upload;
  Abort SDO;
  SDO message can be used to configure the slave node and access the Object Dictionary in every node.
- SOP (Special Object Protocol):
  Support default COB-ID in Predefined Master/Slave Connection Set in DS301 V4.02;
  Support SYNC service;
  Support Emergency service.
- NMT (Network Management):
  Support NMT module control;
  Support NMT Error control;
  Support Boot-up.

***Delta CANopen doesn't support service:***

- Time Stamp service

# E.1 Overview

## E.1.1 CANopen Protocol

CANopen is a CAN-based higher layer protocol, and was designed for motion-oriented machine control networks, such as handling systems. Version 4 of CANopen (CiA DS301) is standardized as EN50325-4. The CANopen specifications cover application layer and communication profile (CiA DS301), as well as a framework for programmable devices (CiA 302), recommendations for cables and connectors (CiA 303-1) and SI units and prefix representations (CiA 303-2).

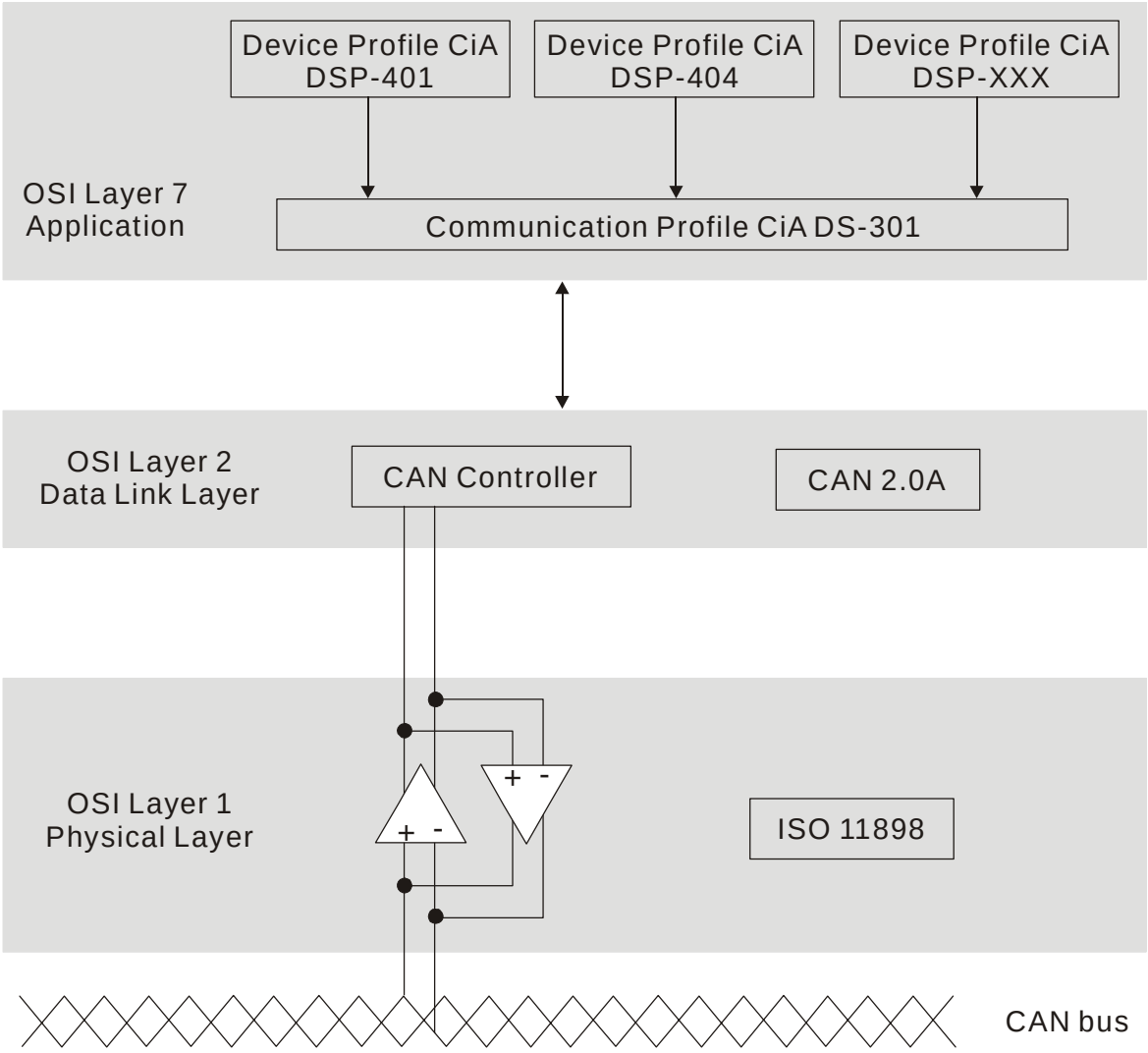

## E.1.2 RJ-45 Pin Definition

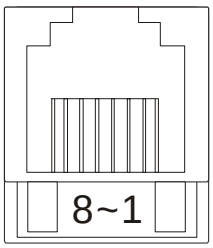


plug

| PIN | Signal | Description |
|---|---|---|
| 1 | CAN_H | CAN_H bus line (dominant high) |
| 2 | CAN_L | CAN_L bus line (dominant low) |
| 3 | CAN_GND | Ground / 0V /V- |
| 4 | SG- | 485 communication |
| 5 | SG+ | 485 communication |
| 6 | GND | Ground |
| 7 | CAN_GND | Ground / 0V /V- |
| 8 | EV | Power |

## E.1.3 Pre-Defined Connection Set

To reduce configuration effort for simple networks, CANopen define a mandatory default identifier allocation scheme. The 11-bit identifier structure in predefined connection is set as follows:

| COB Identifier (CAN Identifier) | | | | | | | | | | |
|---|---|---|---|---|---|---|---|---|---|---|
| 10 | 9 | 8 | 7 | 6 | 5 | 4 | 3 | 2 | 1 | 0 |
| Function Code | | | | Node Number | | | | | | |

| Object | Function Code | Node Number | COB-ID | Object Dictionary Index |
|---|---|---|---|---|
| Broadcast messages | | | | |
| NMT | 0000 | - | 0 | - |
| SYNC | 0001 | - | 0x80 | 0x1005, 0x1006, 0x1007 |
| TIME STAMP | 0010 | - | 0x100 | 0x1012, 0x1013 |
| Point-to-point messages | | | | |
| Emergency | 0001 | 1-127 | 0x81-0xFF | 0x1014, 0x1015 |
| TPDO1 | 0011 | 1-127 | 0x181-0x1FF | 0x1800 |
| RPDO1 | 0100 | 1-127 | 0x201-0x27F | 0x1400 |
| TPDO2 | 0101 | 1-127 | 0x281-0x2FF | 0x1801 |
| RPDO2 | 0110 | 1-127 | 0x301-0x37F | 0x1401 |
| TPDO3 | 0111 | 1-127 | 0x381-0x3FF | 0x1802 |
| RPDO3 | 1000 | 1-127 | 0x401-0x47F | 0x1402 |
| TPDO4 | 1001 | 1-127 | 0x481-0x4FF | 0x1803 |
| RPDO4 | 1010 | 1-127 | 0x501-0x57F | 0x1403 |
| Default SDO (tx) | 1011 | 1-127 | 0x581-0x5FF | 0x1200 |
| Default SDO (rx) | 1100 | 1-127 | 0x601-0x67F | 0x1200 |
| NMT Error Control | 1110 | 1-127 | 0x701-0x77F | 0x1016, 0x1017 |

## E.1.4 CANopen Communication Protocol

It has services as follows:

- NMT (Network Management Object)
- SDO (Service Data Object)
- PDO (Process Data Object)
- EMCY (Emergency Object)

### E.1.4.1 NMT (Network Management Object)

**The Network Management (NMT) follows a Master/Slave structure for executing NMT service. Only one NMT master is in a network, and other nodes are regarded as slaves. All CANopen nodes have a present NMT state, and NMT master can control the state of the slave nodes. The state diagram of a node are shown as follows:**

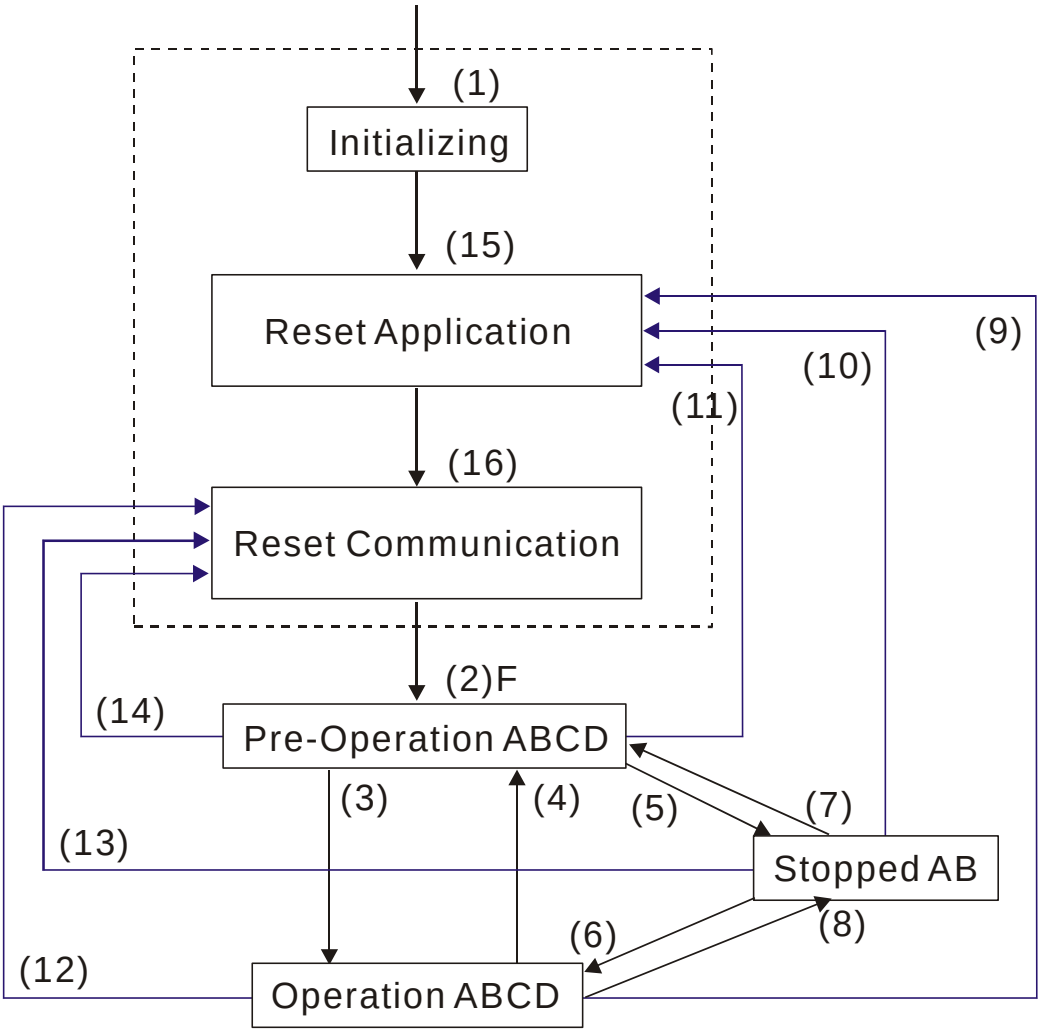

| | |
|---|---|
| (1) After power is applied, it is auto in initialization state | A: NMT |
| (2) Enter pre-operational state automatically | B: Node Guard |
| (3) (6) Start remote node | C: SDO |
| (4) (7) Enter pre-operational state | D: Emergency |
| (5) (8) Stop remote node | E: PDO |
| (9) (10) (11) Reset node | F: Boot-up |
| (12) (13) (14) Reset communication | |
| (15) Enter reset application state automatically | |
| (16) Enter reset communication state automatically | |

| | Initializing | Pre-Operational | Operational | Stopped |
|---|---|---|---|---|
| PDO | | | ○ | |
| SDO | | ○ | ○ | |
| SYNC | | ○ | ○ | |
| Time Stamp | | ○ | ○ | |
| EMERG | | ○ | ○ | |
| Boot-up | ○ | | | |
| NMT | | ○ | ○ | ○ |

**NMT Protocol is shown as follows:**

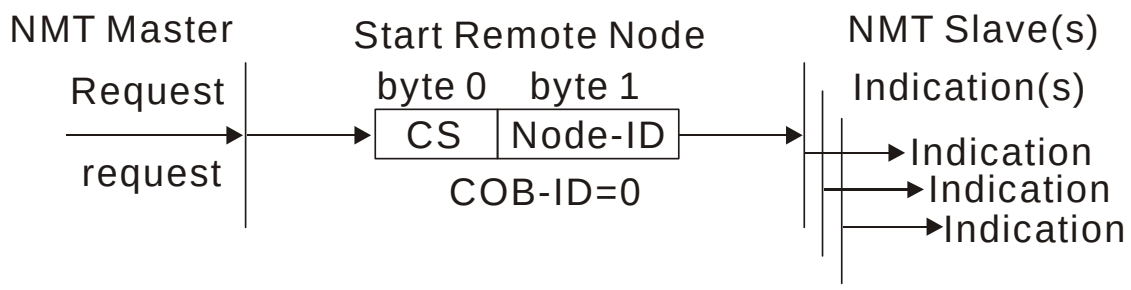


Cs

| Value | Definition |
|---|---|
| 1 | Start |
| 2 | Stop |
| 128 | Enter Pre-Operational |
| 129 | Reset Node |
| 130 | Reset Communication |

## E.1.4.2 SDO (Service Data Object)

**SDO is used to access the Object Dictionary in every CANopen node by Client/Server model. One SDO has two COB-ID (request SDO and response SDO) to upload or download data between two nodes. No data limit for SDOs to transfer data. But it needs to transfer by segment when data exceeds 4 bytes with an end signal in the last segment.**

**The Object Dictionary (OD) is a group of objects in CANopen node. Every node has an OD in the system, and OD contains all parameters describing the device and its network behavior. The access path of OD is the index and sub-index, each object has a unique index in OD, and has sub-index if necessary.**

**The request and response frame structure of SDO communication is shown as follows:**

| Type | | Data 0 | | | | | | | | Data 1 | Data 2 | Data 3 | Data 4 | Data 5 | Data 6 | Data 7 |
|---|---|---|---|---|---|---|---|---|---|---|---|---|---|---|---|---|
| | | 7 | 6 | 5 | 4 | 3 | 2 | 1 | 0 | Index | Index | Index | Data | Data | Data | Data |
| | | command | | | | | | | | L | H | Sub | LL | LH | HL | HH |
| Initiate Domain Download | Client | 0 | 0 | 1 | - | N | | E | S | | | | | | | |
| | Server | 0 | 1 | 1 | - | - | - | - | - | | | | | | | |
| Initiate Domain Upload | Client | 0 | 1 | 0 | - | - | - | - | - | | | | | | | |
| | Server | 0 | 1 | 0 | - | N | | E | S | | | | | | | |
| Abort Domain Transfer | Client | 1 | 0 | 0 | - | - | - | - | - | | | | | | | |
| | Server | 1 | 0 | 0 | - | - | - | - | - | | | | | | | |

N: Bytes not use
E: normal(0)/expedited(1)
S: size indicated

## E.1.4.3 PDO (Process Data Object)

**PDO communication can be described by the producer/consumer model. Each node of the network will listen to the messages of the transmission node and distinguish if the message has to be processed or not after receiving the message. PDO can be transmitted from one device to one another device or to many other devices.**
**Every PDO has two PDO services: a TxPDO and a RxPDO. PDOs are transmitted in a non-confirmed mode.**

**PDO Transmission type is defined in the PDO communication parameter index (1400h for the 1st RxPDO or 1800h for the 1st TxPDO), and all transmission types are listed in the following table:**

| Type Number | PDO | | | | |
|---|---|---|---|---|---|
| | Cyclic | Acyclic | Synchronous | Asynchronous | RTR only |
| 0 | | ○ | ○ | | |
| 1-240 | ○ | | ○ | | |
| 241-251 | Reserved | | | | |
| 252 | | | ○ | | ○ |
| 253 | | | | ○ | ○ |
| 254 | | | | ○ | |
| 255 | | | | ○ | |

**Type number 1-240 indicates the number of SYNC message between two PDO transmissions.**
**Type number 252 indicates the data is updated (but not sent) immediately after receiving SYNC.**
**Type number 253 indicates the data is updated immediately after receiving RTR.**
**Type number 254: Delta CANopen doesn't support this transmission format.**
**Type number 255 indicates the data is asynchronous transmission.**
**All PDO transmission data must be mapped to index via Object Dictionary.**

**Example:**

Master transmits PDO data to Slave

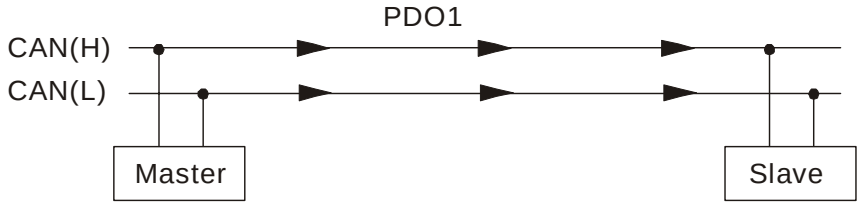


PDO1 data value Data 0, Data 1, Data 2, Data 3, Data 4, Data 5, Data 6, Data 7,
0x11, 0x22, 0x33, 0x44, 0x55, 0x66, 0x77, 0x88,

PDO1 Map

0x60400010

| Index | Sub | Definition | Value | R/W | Size |
|---|---|---|---|---|---|
| | | | | | |
| 0x1600 | 0 | 0. Number | 1 | R/W | U8 |
| 0x1600 | 1 | 1. Mapped Object | 0x60400010 | R/W | U32 |
| 0x1600 | 2 | 2. Mapped Object | 0 | R/W | U32 |
| 0x1600 | 3 | 3. Mapped Object | 0 | R/W | U32 |
| 0x1600 | 4 | 4. Mapped Object | 0 | R/W | U32 |
| | | | | | |
| 0x6040 | 0 | 0. Control word | 0x2211 | R/W | U16 (2 Bytes) |

Slave returns message to Master

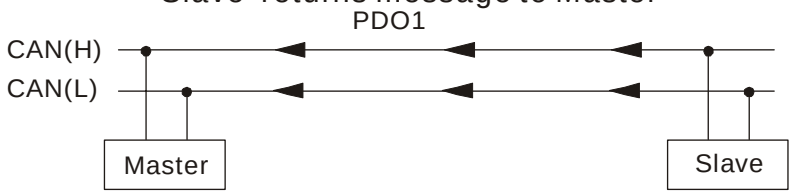


PDO1 data value Data 0, Data 1, Data 2, Data 3, Data 4, Data 5, Data 6, Data 7,
0xF3, 0x00,

PDO1 Map

| Index | Sub | Definition | Value | R/W | Size |
|---|---|---|---|---|---|
| | | | | | |
| 0x1A00 | 0 | 0. Number | 1 | R/W | U8 |
| 0x1A00 | 1 | 1. Mapped Object | 0x60410010 | R/W | U32 |
| 0x1A00 | 2 | 2. Mapped Object | 0 | R/W | U32 |
| 0x1A00 | 3 | 3. Mapped Object | 0 | R/W | U32 |
| 0x1A00 | 4 | 4. Mapped Object | 0 | R/W | U32 |
| | | | | | |
| 0x6041 | 0 | Status Word | 0xF3 | R/W | U16 |

## E.1.4.4 EMCY (Emergency Object)

**Emergency objects are triggered when hardware failure occurs for a warning interrupt.**

**The data format of a emergency object is a 8 bytes data as shown in the following:**

| Byte | 0 | 1 | 2 | 3 | 4 | 5 | 6 | 7 |
|---|---|---|---|---|---|---|---|---|
| Content | Emergency Error Code | | Error register (Object 1001H) | Manufacturer specific Error Field | | | | |

**Definition of Emergency Object:**

| Display | Controller Error Code | Description | CANopen Error Code | CANopen Error Register (bit 0~7) |
|---|---|---|---|---|
| oc | 0001H | Over current | 2130H | 1 |
| ou | 0002H | Over voltage | 3210H | 2 |
| oH1 | 0003H | Overheating | 4310H | 3 |
| oL | 0005H | Overload | 2310H | 1 |
| oL1 | 0006H | Overload 1 | 2310H | 1 |
| oL2 | 0007H | Overload 2 | 2310H | 1 |
| EF | 0008H | External Fault | 9000H | 5 |
| ocA | 0009H | Over-current during acceleration | 2310H | 1 |
| ocd | 000AH | Over-current during deceleration | 2310H | 1 |
| ocn | 000BH | Over-current during constant speed operation | 2310H | 1 |
| GFF | 000CH | Ground fault | 2240H | 1 |
| Lu | 000DH | Lower than standard voltage | 3220H | 2 |
| PHL | 000EH | Phase Loss | 3130H | 2 |
| bb | 000FH | External Base Block | 9000H | 5 |
| codE | 0011H | Software protection failure | 6320H | 5 |
| cF1.0 | 0013H | Internal EEPROM can not be programmed | 5530H | 5 |
| cF2.0 | 0014H | Internal EEPROM can not be read | 5530H | 5 |
| HPF1 | 0015H | CC (current clamp) | 5000H | 5 |
| HPF2 | 0016H | OV hardware error | 5000H | 2 |
| HPF3 | 0017H | GFF hardware error | 5000H | 2 |
| HPF4 | 0018H | OC hardware error | 5000H | 1 |
| cF3.0 | 0019H | U-phase error | 2300H | 1 |
| cF3.1 | 001AH | V-phase error | 2300H | 1 |
| cF3.2 | 001BH | W-phase error | 2300H | 1 |
| cF3.3 | 001CH | OV or LV | 3210H | 2 |
| cF3.4 | 001DH | Temperature sensor error | 4310H | 3 |
| cF1.1 | 001FH | Internal EEPROM can not be programmed | 5530H | 5 |

| Display | Controller Error Code | Description | CANopen Error Code | CANopen Error Register (bit 0~7) |
|---|---|---|---|---|
| cF2.1 | 0020H | Internal EEPROM can not be read | 5530H | 5 |
| AErr | 0021H | Analog signal error | FF00H | 7 |
| PtC1 | 0023H | Motor overheat protection | 7120H | 5 |
| PGEr | 0024H | PG signal error | 7300H | 7 |
| cP10 | 0029H | Communication time-out error on the control board or power board | 7500H | 4 |
| dEb | 0029H | dEb error | 3320H | 2 |
| ACL | 002AH | ACL (Abnormal Communication Loop) | 7500H | 4 |

**Definition of Index:**

| Index | Sub | Definition | Factory Setting | R/W | Size | Unit | NOTE |
|---|---|---|---|---|---|---|---|
| 0x1000 | 0 | Abort connection option code | 0x00010192 | RO | U32 | | |
| 0x1001 | 0 | Error register | 0 | RO | U8 | | |
| 0x1005 | 0 | COB-ID SYNC message | 0x80 | RW | U32 | | |
| 0x1006 | 0 | Communication cycle period | 0 | RW | U32 | us | 500us~15000us |
| 0x1008 | 0 | Manufacturer device name | 0 | RO | U32 | | |
| 0x1009 | 0 | Manufacturer hardware version | 0 | RO | U32 | | |
| 0x100A | 0 | Manufacturer software version | 0 | RO | U32 | | |
| 0x100C | 0 | Guarding time | 0 | RW | U16 | ms | 0x80 + node 1 |
| 0x100D | 0 | Guarding factor | 0 | RW | U8 | | |
| 0x1014 | 0 | COB-ID emergency | 0x0000080 +Node-ID | RO | U32 | | |
| 0x1015 | 0 | Inhibit time EMCY | 0 | RW | U16 | 100us | It is set to be multiple of 10. |
| 0x1016 | 0 | Number | 0x1 | RO | U8 | | |
| | 1 | Consumer heartbeat time | 0x0 | RW | U32 | 1ms | Heartbeat time can be used when Guarding time is invalid. |
| 0x1017 | 0 | Producer heartbeat time | 0x0 | RW | U16 | 1ms | Heartbeat time can be used when Guarding time is invalid. |
| 0x1018 | 0 | Number | 0x3 | RO | U8 | | |
| | 1 | Vender ID | 0x000001DD | RO | U32 | | |
| | 2 | Product code | 0x00002600 +model | RO | U32 | | |
| | 3 | Revision | 0x00010000 | RO | U32 | | |
| 0x1200 | 0 | Server SDO Parameter | 2 | RO | U8 | | |
| | 1 | COB-ID Client -> Server | 0x0000600+ Node-ID | RO | U32 | | |
| | 2 | COB-ID Client <- Server | 0x0000580+ Node-ID | RO | U32 | | |
| 0x1400 | 0 | Number | 2 | RO | U8 | | |
| | 1 | COB-ID used by PDO | 0x00000200 +Node-ID | RW | U32 | | |
| | 2 | Transmission Type | 5 | RW | U8 | | 00:Acyclic & Synchronous<br>01~240:Cyclic & Synchronous<br>255: Asynchronous |
| 0x1401 | 0 | Number | 2 | RO | U8 | | |

| Index | Sub | Definition | Factory Setting | R/W | Size | Unit | NOTE |
|---|---|---|---|---|---|---|---|
| | 1 | COB-ID used by PDO | 0x80000300 +Node-ID | RW | U32 | | |
| | 2 | Transmission Type | 5 | RW | U8 | | 00:Acyclic & Synchronous<br>01~240:Cyclic & Synchronous<br>255: Asynchronous |
| 0x1600 | 0 | Number | 2 | RW | U8 | | |
| | 1 | 1.Mapped Object | 0x60400010 | RW | U32 | | |
| | 2 | 2.Mapped Object | 0x60420020 | RW | U32 | | |
| | 3 | 3.Mapped Object | 0 | RW | U32 | | |
| | 4 | 4.Mapped Object | 0 | RW | U32 | | |
| 0x1601 | 0 | Number | 0 | RW | U8 | | |
| | 1 | 1.Mapped Object | 0 | RW | U32 | | |
| | 2 | 2.Mapped Object | 0 | RW | U32 | | |
| | 3 | 3.Mapped Object | 0 | RW | U32 | | |
| | 4 | 4.Mapped Object | 0 | RW | U32 | | |
| 0x1800 | 0 | Number | 5 | RO | U8 | | |
| | 1 | COB-ID used by PDO | 0x00000180 +Node-ID | RW | U32 | | |
| | 2 | Transmission Type | 5 | RW | U8 | | 00:Acyclic & Synchrouous<br>01~240:Cyclic & Synchrouous<br>253: Remote function<br>255: Asynchronous |
| | 3 | Inhibit time | 0 | RW | U16 | 100us | It is set to be multiple of 10. |
| | 4 | Reserved | 3 | RW | U8 | | Reserved |
| | 5 | Event timer | 0 | RW | U16 | 1ms | |
| 0x1801 | 0 | Number | 5 | RO | U8 | | |
| | 1 | COB-ID used by PDO | 0x80000280 +Node-ID | RW | U32 | | |
| | 2 | Transmission Type | 5 | RW | U8 | | 00:Acyclic & Synchrouous<br>01~240:Cyclic & Synchrouous<br>253: Remote function<br>255: Asynchronous |
| | 3 | Inhibit time | 0 | RW | U16 | 100us | It is set to be multiple of 10. |
| | 4 | Reserved | 3 | RW | U8 | | |
| | 5 | Event timer | 0 | RW | U16 | 1ms | |
| 0x1A00 | 0 | Number | 2 | RW | U8 | | |
| | 1 | 1.Mapped Object | 0x60410010 | RW | U32 | | |
| | 2 | 2.Mapped Object | 0x60430010 | RW | U32 | | |
| | 3 | 3.Mapped Object | 0 | RW | U32 | | |
| | 4 | 4.Mapped Object | 0 | RW | U32 | | |

| Index | Sub | Definition | Factory Setting | R/W | Size | Unit | NOTE |
|---|---|---|---|---|---|---|---|
| 0x1A01 | 0 | Number | 0 | RW | U8 | | |
| | 1 | 1.Mapped Object | 0 | RW | U32 | | |
| | 2 | 2.Mapped Object | 0 | RW | U32 | | |
| | 3 | 3.Mapped Object | 0 | RW | U32 | | |
| | 4 | 4.Mapped Object | 0 | RW | U32 | | |

**Delta Definition Part:**

| Index | Sub | Definition | Factory Setting | R/W | Size | Unit | NOTE | |
|---|---|---|---|---|---|---|---|---|
| 2020 | 0 | Number | 3 | RO | U8 | | | |
| | 1 | Control word | 0 | RW | U16 | | bit 0 ~ 1 | 00B：No function |
| | | | | | | | | 01B：Stop |
| | | | | | | | | 10B：Start |
| | | | | | | | | 11B：JOG Start |
| | | | | | | | Bit2~3 | Reserved |
| | | | | | | | Bit4~5 | 00B：No function |
| | | | | | | | | 01B：Forward Command |
| | | | | | | | | 10B：Reverse Command |
| | | | | | | | | 11B： Direction Change Command |
| | | | | | | | Bit6~7 | 00B：1st step accel / decal |
| | | | | | | | | 01B：2nd step accel / decel |
| | | | | | | | Bit8~15 | Reserved |
| | 2 | vl target velocity | 0 | RW | U16 | Hz | | |
| | 3 | Other trigger | 0 | RW | U16 | | Bit0 | 1：E.F. ON |
| | | | | | | | Bit1 | 1：Reset Command |
| | | | | | | | Bit2~15 | Reserved |
| 0x2021 | 0 | Number | 0xD | RO | U8 | | | |
| | 1 | Error code | 0 | RO | U16 | | | |
| | 2 | Drive Status | 0 | RO | U16 | | Bit 0~1 | 00B：Drive stop |
| | | | | | | | | 01B：Drive decelerates stopping |

| | | | | | | | | |
|---|---|---|---|---|---|---|---|---|
| | | | | | | | | 10B：Drive operation waits for frequency command |
| | | | | | | | | 11B：Drive operates |
| | | | | | | | Bit 2 | 1：JOG Command |
| | | | | | | | Bit 3~4 | 00B：Drive Forward |
| | | | | | | | | 01B：Drive from reverse to forward |
| | | | | | | | | 10B：Drive from forward to reverse |
| | | | | | | | | 11B：Drive Reverse |
| | | | | | | | Bit 5~7 | Reserved |
| | | | | | | | Bit 8 | 1：Main frequency source from the communication interface |
| | | | | | | | Bit 9 | 1：Main frequency source from the analog signal input |
| | | | | | | | Bit 10 | 1：Operation command from the communication interface |
| | | | | | | | Bit 11~15 | Reserved |
| | 3 | Frequency Command（F） | 0 | RO | U16 | Hz | | |
| | 4 | Output Frequency（H） | 0 | RO | U16 | | | |
| | 5 | Input Current（AXX.X） | 0 | RO | U16 | | | |
| | 6 | Reserved | 0 | RO | U16 | | | |
| | 7 | Reserved | 0 | RO | U16 | | | |
| | 8 | Reserved | 0 | RO | U16 | | | |
| | 9 | DC-BUS Voltage（uXXX.X） | 0 | RO | U16 | | | |

| | | | | | | | | |
|---|---|---|---|---|---|---|---|---|
| | A | Input Voltage （EXXX.X） | 0 | RO | U16 | | | |
| | B | IGBT Temperature (℃) | 0 | RO | U16 | | | |
| | C | User Definition (Low word) | 0 | RO | U16 | | | |
| | D | User Definition (High word) | 0 | RO | U16 | | | |

**DS402 Part:**

| Index | Sub | Definition | Factory Setting | RW | Size | Unit | Map | NOTE |
|---|---|---|---|---|---|---|---|---|
| 0x6007 | 0 | Abort connection option code | 2 | RW | S16 | | Yes | 0: No action<br>2: Disable Voltage<br>3: Quick stop |
| 0x603F | 0 | Error code | 0 | RO | U16 | | Yes | |
| 0x6040 | 0 | Control word | 0 | RW | U16 | | Yes | bit 0 ~ 3: switch status<br>bit 4: rfg enable<br>bit 5: rfg unlock<br>bit 6: rfg use ref<br>bit 7: Fault reset |
| 0x6041 | 0 | Status word | 0 | RO | U16 | | Yes | Bit0 Ready to switch on<br>Bit1 Switched on<br>Bit2 Operation enabled<br>Bit3 Fault<br>Bit4 Voltage enabled<br>Bit5 Quick stop<br>Bit6 Switch on disabled<br>Bit7 Warning<br>Bit8 Desired frequency arrived<br>Bit9 Remote<br>Bit10 Target reached<br>Bit11 Internal limit active<br>Bit12 - 13<br>Bit14 - 15 |
| 0x6042 | 0 | vl target velocity | 0 | RW | S16 | rpm | Yes | |
| 0x6043 | 0 | vl velocity demand | 0 | RO | S16 | rpm | Yes | |
| 0x604F | 0 | vl ramp function time | 10000 | RW | U32 | 1ms | Yes | If Pr.01.19 is set to 0.1, the unit must be 100ms and can't be set to 0. |
| 0x6050 | 0 | vl slow down time | 10000 | RW | U32 | 1ms | Yes | If Pr.01.19 is set to 0.1, the unit must be 100ms and can't be set to 0. |
| 0x6051 | 0 | vl quick stop time | 1000 | RW | U32 | 1ms | Yes | If Pr.01.19 is set to 0.1, the unit must be 100ms and can't be set to 0. |
| 0x605A | 0 | Quick stop option code | 2 | RW | S16 | 1ms | Yes | 0 : disable drive function<br>1 :slow down on slow down ramp<br>2: slow down on quick stop ramp ($2^{nd}$ decel. time)<br>5 slow down on slow down ramp and stay in QUICK STOP<br>6 slow down on quick stop ramp and stay in QUICK STOP |
| 0x6060 | 0 | Mode of operation | 2 | RO | U8 | | Yes | Speed mode |
| 0x6061 | 0 | Mode of operation display | 2 | RO | U8 | | Yes | |

**Remote I/O Part:**

| Index | Sub | Define | Default | R/W | Size | Remark | |
|---|---|---|---|---|---|---|---|
| 2026H | 0h | Number | DFh | R | U8 | | |
| | 1h | MI Status | 0x00 | R | U16 | Bit 0 | MI1 |
| | | | | | | Bit 1 | MI2 |
| | | | | | | Bit 2 | MI3 |
| | | | | | | Bit 3 | MI4 |
| | | | | | | Bit 4 | MI5 |
| | | | | | | Bit 5 | MI6 |
| | | | | | | Bit 6 | MI7(External card) |
| | | | | | | Bit 7 | MI8(External card) |
| | | | | | | Bit 8 | MI9(External card) |
| | | | | | | Bit 9 | |
| | | | | | | Bit 10 | |
| | | | | | | Bit 11 | |
| | | | | | | Bit 12 | |
| | | | | | | Bit 13 | |
| | | | | | | Bit 14 | |
| | | | | | | Bit 15 | |
| | 2h~40h | Reserved | 0x00 | R | U16 | | |
| | 41h | MO Control | 0x00 | RW | U16 | Bit 0 | RY |
| | | | | | | Bit 1 | MO1 |
| | | | | | | Bit 2 | RY2/MO2(External card) |
| | | | | | | Bit 3 | RY3/MO3(External card) |
| | | | | | | Bit 4 | RY4/MO4(External card) |
| | | | | | | Bit 5 | |
| | | | | | | Bit 6 | |
| | | | | | | Bit 7 | |
| | | | | | | Bit 8 | |
| | | | | | | Bit 9 | |
| | | | | | | Bit 10 | |
| | | | | | | Bit 11 | |
| | | | | | | Bit 12 | |
| | | | | | | Bit 13 | |
| | | | | | | Bit 14 | |
| | | | | | | Bit 15 | |
| | 42h~60h | Reserved | 0x00 | R | U16 | | |
| | 61h | AVI | 0x00 | R | U16 | 0.00 ~100.00% | |
| | 62h | ACI | 0x00 | R | U16 | 0.00 ~100.00% | |

| Index | Sub | Define | Default | R/W | Size | Remark |
|---|---|---|---|---|---|---|
| | 63h | VR | 0x00 | R | U16 | 0.00 ~100.00% |
| | 64h | AI1/AUI1 | 0x00 | R | U16 | 0.00 ~100.00% |
| | 65h | AI2 | 0x00 | R | U16 | 0.00 ~100.00% |
| | 66h~A0h | Reserved | 0x00 | R | U16 | |
| | A1h | AFM1 | 0x00 | RW | U16 | 0.00 ~100.00% |
| | A2h | AO1 | 0x00 | RW | U16 | 0.00 ~100.00% |
| | A3h | AO2 | 0x00 | RW | U16 | 0.00 ~100.00% |
| | A4h~DFh | Reserved | | | | |

## E.2 CANopen Communication Interface Description

### E-2-1 Select control mode

There are two kinds of control mode for CANOpen, when Pr.09.24 sets to 1(default factory settings), the control mode is using DS402 standard; when Pr.09.24 sets to 0, the control mode is adopting Delta standard.

### E-2-2 Control mode use DS402 standard

To control the AC motor drive by CANopen, please set parameters by the following steps:

1. Operation source setting: set Pr.02.01 to 5 and select CANopen communication mode.
2. Frequency source setting: set Pr.02.00 to 5 and select via CANopen settings.
3. CANopen station setting: set CANopen communication address (1-127) via Pr.09.20 settings.
4. CANopen baud rate setting: set Pr.09.21 for CANopen baud rate (items: 1M, 500K, 250K, 125K and 50K).
5. CANopen control decoding setting: set Pr.09.24 to 1 and select DS402 specification for decoding.
6. Set multiple input functions to quick stop when necessary: Set Pr.04.05 ~ 04.08 or Pr.11.06 ~ 11.11 to 23.
7. According to DS402 specification for motion control, CANopen provide the speed control mode. The control flow has multiple statuses which can switch between “Start” to “Quick Stop”. If you want to know the current status, you can get it by “Status Word”. The status switch mode needs to go through the “Control Word” of PDO with external terminals.
8. To switch the operation mode of drive (Operation Enable, via NMT characters). The switch flow is controlling by word “0x6040” bit 0 ~bit3 and bit7 with status word “0x6041”.

For example：

If there is a hardware Quick stop function,

A. Connect the Quick stop signal

B. Set Index 0x6040 = 0x7E

C. Set Index 0x6040 = 0x7F, now the drive status is operating.

D. Set Index 0x6042 = 1500 (rpm), the default pole number is 4,frequency is 1500(120/4)=50Hz，and pole settings is on 5-04(1st motor)、5-16(2nd motor).

Motor speed formula： $n = f \times \frac{120}{p}$

rpm=(120*frequency)/pole

n：rotation speed (rpm) (rounds/minute)

p：motor's pole number (Pole)

f： rotation frequency (Hz)

Example 1：Set forward 30 Hz, pole number is 4 (120*30)/4 = 900rpm

Example 2：Set reverse 20 Hz, pole number is 6 (120*15)/6 = 300rpm

And 300 = 0x012C the plus or minus sign is defining as bit15

So that Index 6042 = -300 = (300' + 1) = 0x012C' + 1 = 0xFED3 +1 = 0xFED4

Following is the flow chart for status switch:

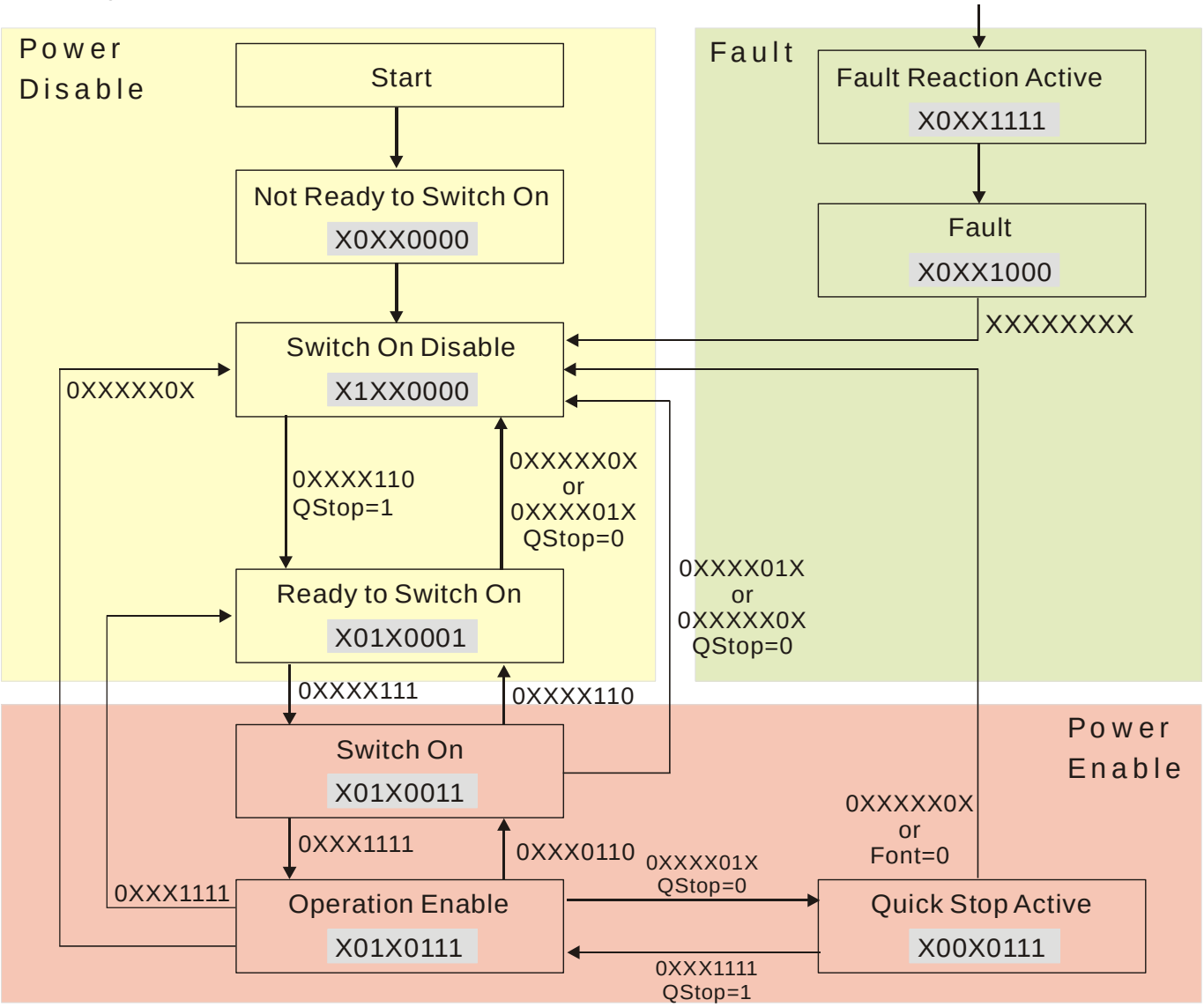


<State switching flowchart>

9. According to DSP-402 standard for motion control, by using control word 0x6040 bit 4 ~bit6 to make the drive is running or not, and the definition is as follows:

| bit 6 | bit 5 | bit 4 | Result |
|---|---|---|---|
| Ramp function reference | Ramp function disable | Ramp function enable | |
| 0 | 0 | 0 | STOP |
| 1 | 0 | 0 | STOP |
| 0 | 1 | 0 | STOP |
| 1 | 1 | 0 | STOP |
| 0 | 0 | 1 | STOP |
| 1 | 0 | 1 | LOCK in current frequency |
| 0 | 1 | 1 | STOP |
| 1 | 1 | 1 | RUN |

10. Please refer to the state switching flowchart for status word 0x6041 bit 0 ~ bit 6 ,and bit 7 is defining as warn, bit 9 is always 1 ，bit 10 is defining as desired frequency arrived ,bit 11 is defining as output exceeds the maximum frequency.

**E-2-3 Control mode use Delta standard**

1. Operation source setting: set Pr.02.01 to 5 and select CANopen communication mode.
2. Frequency source setting: set Pr.02.00 to 5 and select via CANopen settings.
3. CANopen station setting: set CANopen communication address (1-127) via Pr.09.20 settings.
4. CANopen baud rate setting: set Pr.09.21 for CANopen baud rate (items: 1M, 500K, 250K, 125K and 50K).
5. CANopen control decoding setting: set Pr.09.24 to 0 and select Delta’s specification for decoding.
6. For Index 2020.01, if you give command 0002H, it will run; if you give command 0001H, it will stop. If you give command 1000 for Index 2020.02, drive frequency is 10.00Hz; related usage can refer to Index 2020 and 2021 definition.

# *Appendix F: Suggestions & Error Corrections for Standard AC Motor Drives*

F.1 Maintenance and Inspections
F.2 Greasy Dirt Problem
F.3 Fiber Dust Problem
F.4 Erosion Problem
F.5 Industrial Dust Problem
F.6 Wiring and Installation Problem
F.7 Multi-function Input/Output Terminals Problem

The AC motor drive has a comprehensive fault diagnostic system that includes several different alarms and fault messages. Once a fault is detected, the corresponding protective functions will be activated. The following faults are displayed as shown on the AC motor drive digital keypad display. The six most recent faults can be read from the digital keypad or communication.

The AC motor drive is made up by numerous components, such as electronic components, including IC, resistor, capacity, transistor, and cooling fan, relay, etc. These components can't be used permanently. They have limited-life even under normal operation. Preventive maintenance is required to operate this AC motor drive in its optimal condition, and to ensure a long life.

Check your AC motor drive regularly to ensure there are no abnormalities during operation and follows the precautions:

| | | |
|---|---|---|
| **CAUTION** | ☑ | Wait 5 seconds after a fault has been cleared before performing reset via keypad of input terminal. |
| | ☑ | When the power is off after 5 minutes for ≦ 22kW models and 10 minutes for ≧ 30kW models, please confirm that the capacitors have fully discharged by measuring the voltage between + and -. The voltage between + and - should be less than 25VDC. |
| | ☑ | Only qualified personnel can install, wire and maintain drives. Please take off any metal objects, such as watches and rings, before operation. And only insulated tools are allowed. |
| | ☑ | Never reassemble internal components or wiring. |
| | ☑ | Make sure that installation environment comply with regulations without abnormal noise, vibration and smell. |

# F.1 Maintenance and Inspections

Before the check-up, always turn off the AC input power and remove the cover. Wait at least 10 minutes after all display lamps have gone out, and then confirm that the capacitors have fully discharged by measuring the voltage between DC+ and DC-. The voltage between DC+ and DC-should be less than 25VDC.

**Ambient environment**

| Check Items | Methods and Criterion | Maintenance Period | | |
|---|---|---|---|---|
| | | Daily | Half Year | One Year |
| Check the ambient temperature, humidity, vibration and see if there are any dust, gas, oil or water drops | Visual inspection and measurement with equipment with standard specification | ○ | | |
| If there are any dangerous objects | Visual inspection | ○ | | |

**Voltage**

| Check Items | Methods and Criterion | Maintenance Period | | |
|---|---|---|---|---|
| | | Daily | Half Year | One Year |
| Check if the voltage of main circuit and control circuit is correct | Measure with multimeter with standard specification | ○ | | |

**Digital Keypad Display**

| Check Items | Methods and Criterion | Maintenance Period | | |
|---|---|---|---|---|
| | | Daily | Half Year | One Year |
| Is the display clear for reading | Visual inspection | ○ | | |
| Any missing characters | Visual inspection | ○ | | |

**Mechanical parts**

| Check Items | Methods and Criterion | Maintenance Period | | |
|---|---|---|---|---|
| | | Daily | Half Year | One Year |
| If there is any abnormal sound or vibration | Visual and aural inspection | | ○ | |
| If there are any loose screws | Tighten the screws | | ○ | |
| If any part is deformed or damaged | Visual inspection | | ○ | |
| If there is any color change by overheating | Visual inspection | | ○ | |
| If there is any dust or dirt | Visual inspection | | ○ | |

**Main circuit**

| Check Items | Methods and Criterion | Maintenance Period | | |
|---|---|---|---|---|
| | | Daily | Half Year | One Year |
| If there are any loose or missing screws | Tighten or replace the screw | ○ | | |
| If machine or insulator is deformed, cracked, damaged or with color change due to overheating or ageing | Visual inspection **NOTE: Please ignore the color change of copper plate** | | ○ | |
| If there is any dust or dirt | Visual inspection | | ○ | |

**Terminals and wiring of main circuit**

| Check Items | Methods and Criterion | Maintenance Period | | |
|---|---|---|---|---|
| | | Daily | Half Year | One Year |
| If the terminal or the plate is color change or deformation due to overheat | Visual inspection | | ○ | |
| If the insulator of wiring is damaged or color change | Visual inspection | | ○ | |
| If there is any damage | Visual inspection | ○ | | |

**DC capacity of main circuit**

| Check Items | Methods and Criterion | Maintenance Period | | |
|---|---|---|---|---|
| | | Daily | Half Year | One Year |
| If there is any leak of liquid, color change, crack or deformation | Visual inspection | ○ | | |
| If the safety valve is not removed? If valve is inflated? | Visual inspection | ○ | | |
| Measure static capacity when required | | ○ | | |

**Resistor of main circuit**

| Check Items | Methods and Criterion | Maintenance Period | | |
|---|---|---|---|---|
| | | Daily | Half Year | One Year |
| If there is any peculiar smell or insulator cracks due to overheat | Visual inspection, smell | ○ | | |
| If there is any disconnection | Visual inspection | ○ | | |
| If connection is damaged? | Measure with multimeter with standard specification | ○ | | |

**Transformer and reactor of main circuit**

| Check Items | Methods and Criterion | Maintenance Period | | |
|---|---|---|---|---|
| | | Daily | Half Year | One Year |
| If there is any abnormal vibration or peculiar smell | Visual, aural inspection and smell | ○ | | |

**Magnetic contactor and relay of main circuit**

| Check Items | Methods and Criterion | Maintenance Period | | |
|---|---|---|---|---|
| | | Daily | Half Year | One Year |
| If there are any loose screws | Visual and aural inspection | ○ | | |
| If the contact works correctly | Visual inspection | ○ | | |

**Printed circuit board and connector of main circuit**

| Check Items | Methods and Criterion | Maintenance Period | | |
|---|---|---|---|---|
| | | Daily | Half Year | One Year |
| If there are any loose screws and connectors | Tighten the screws and press the connectors firmly in place. | | ○ | |
| If there is any peculiar smell and color change | Visual and smell inspection | | ○ | |
| If there is any crack, damage, deformation or corrosion | Visual inspection | | ○ | |
| If there is any liquid is leaked or deformation in capacity | Visual inspection | | ○ | |

**Cooling fan of cooling system**

| Check Items | Methods and Criterion | Maintenance Period | | |
|---|---|---|---|---|
| | | Daily | Half Year | One Year |
| If there is any abnormal sound or vibration | Visual, aural inspection and turn the fan with hand (turn off the power before operation) to see if it rotates smoothly | | ○ | |
| If there is any loose screw | Tighten the screw | | ○ | |
| If there is any color change due to overheat | Change fan | | ○ | |

**Ventilation channel of cooling system**

| Check Items | Methods and Criterion | Maintenance Period | | |
|---|---|---|---|---|
| | | Daily | Half Year | One Year |
| If there is any obstruction in the heat sink, air intake or air outlet | Visual inspection | | ○ | |

**The lifetime of components**

| Check Items | Methods and Criterion | Replace Period | | |
|---|---|---|---|---|
| | | 5 years | 8 years | 10 years |
| Cooling Fan | Visual inspection | | ○ | |
| Main Circuit-Capacitor | Visual inspection | | | ○ |

**NOTE**

Use neutral fabrics to clean the cooling fan and use dust cleaner to remove dust when necessary.

## F.2 Greasy Dirt Problem

Serious greasy dirt problems generally occur in processing industries such as machine tools, punching machines and so on. Please be aware of the possible damages that greasy oil may cause to your drive:

1. Electronic components that silt up with greasy oil may cause the drive to burn out or even explode.
2. Most greasy dirt contains corrosive substances that may damage the drive.

**Solution:**

Install the AC motor drive in a standard cabinet to keep it away from dirt. Clean and remove greasy dirt regularly to prevent damage of the drive.

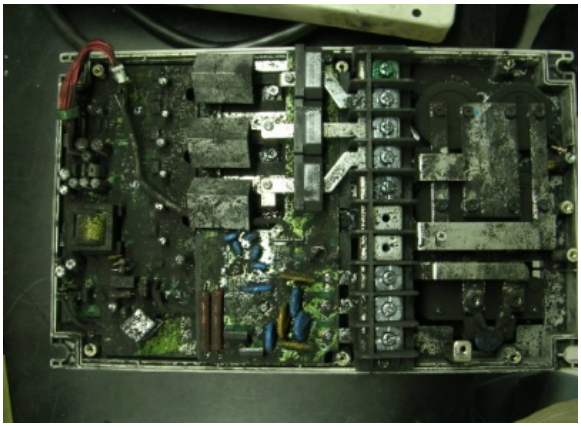

## F.3 Fiber Dust Problem

Serious fiber dust problems generally occur in the textile industry. Please be aware of the possible damages that fiber may cause to your drives:

1. Fiber that accumulates or adheres to the fans will lead to poor ventilation and cause overheating problems.
2. Plant environments in the textile industry have higher degrees of humidity that may cause the drive to burn out, become damaged or explode due to wet fiber dust adhering to the devices.

**Solution:**

Install the AC motor drive in a standard cabinet to keep it away from fiber dust. Clean and remove fiber dust regularly to prevent damage to the drive.

## F.4 Erosion Problem

Erosion problems may occur if any fluids flow into the drives. Please be aware of the damages that erosion may cause to your drive.

1. Erosion of internal components may cause the drive to malfunction and possibility to explode.

**Solution:**

Install the AC motor drive in a standard cabinet to keep it away from fluids. Clean the drive regularly to prevent erosion.

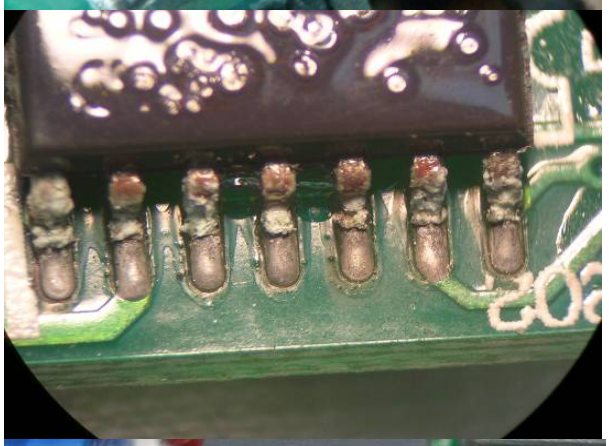

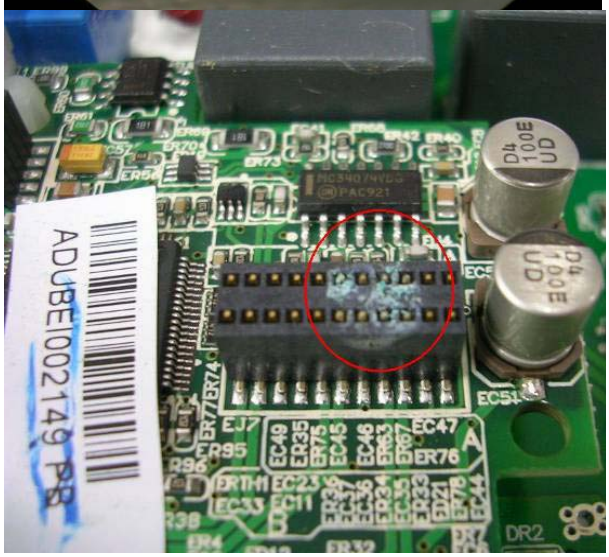

## F.5 Industrial Dust Problem

Serious industrial dust pollution frequently occurs in stone processing plants, flour mills, cement plants, and so on. Please be aware of the possible damage that industrial dust may cause to your drives:

1. Dust accumulating on electronic components may cause overheating problem and shorten the service life of the drive.
2. Conductive dust may damage the circuit board and may even cause the drive to explode.

**Solution:**

Install the AC motor drive in a standard cabinet and cover the drive with a dust cover. Clean the cabinet and ventilation hole regularly for good ventilation.

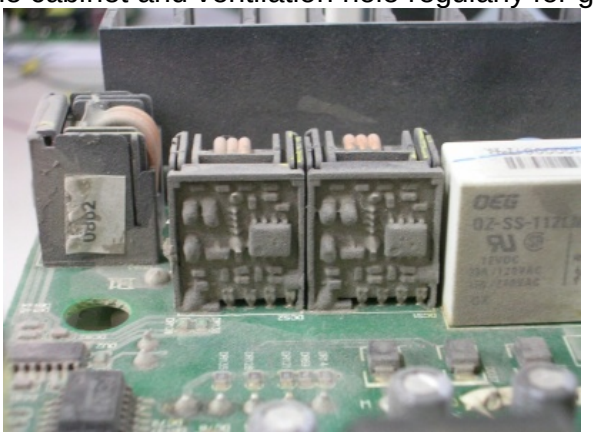

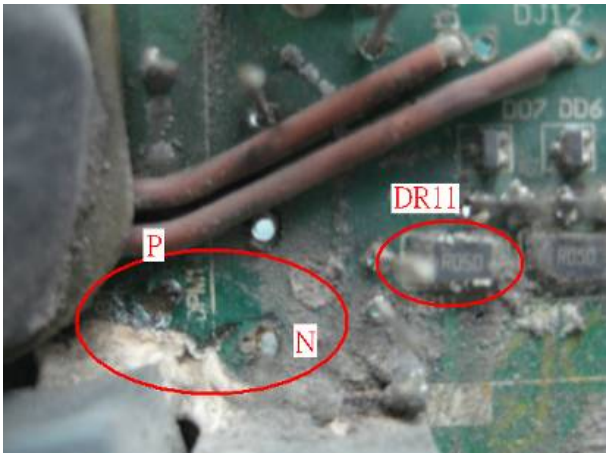

# F.6 Wiring & Installation Problem

When wiring the drive, the most common problem is wrong wire installation or poor wiring. Please be aware of the possible damages that poor wiring may cause to your drives:

1. Screws are not fully fastened. Occurrence of sparks as impedance increases.
2. If a customer has opened the drive and modified the internal circuit board, the internal components may have been damaged.

**Solution:**

Ensure all screws are fastened when installing the AC motor drive. If the AC motor drive functions abnormally, send it back to the repair station. DO NOT try to reassemble the internal components or wire.

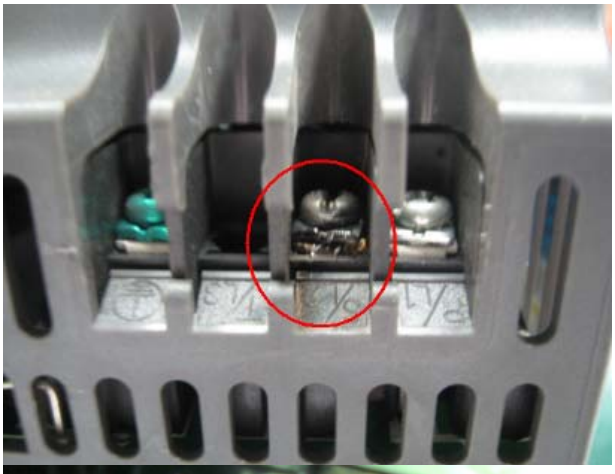

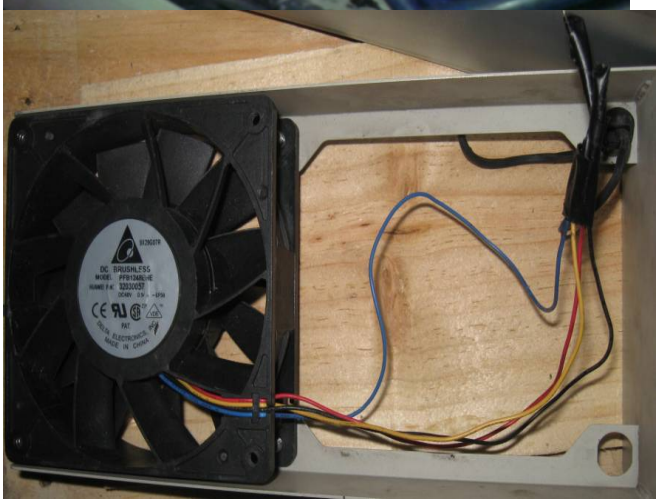

## F.7 Multi-function Input/ Output Terminal Problem:

Multi-function input/output terminal errors are generally caused by over usage of terminals and not following specifications. Please be aware of the possible damages that errors on multi-function input/output terminals may cause to your drives:

1. Input/output circuit may burns out when the terminal usage exceeds its limit.

**Solution:**
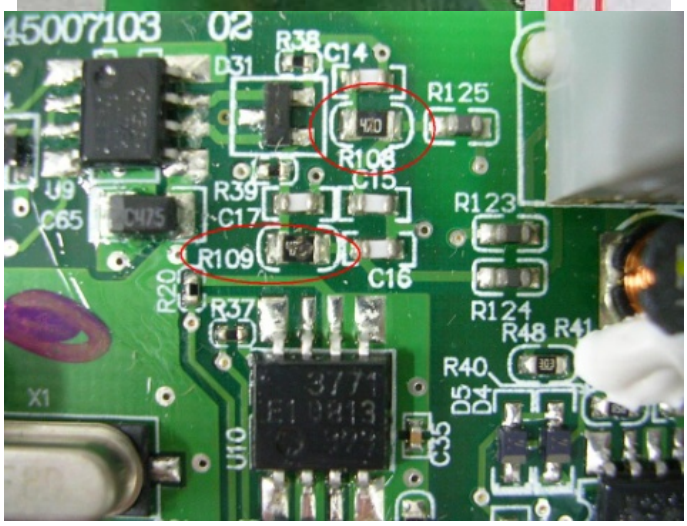
Refer to the user manual for multi-function input output terminals usage and follow the specified voltage and current. DO NOT exceed the specification limits.